QUEENSLAND URBAN UTILITIES

Main Auxiliary Switchboard
Luggage Point Sewage Treatment Plant

Contract : **C1011-045 Order No: C202**

Job Number : **43402595**

ELECTRICAL INSTALLATION

OPERATIONS and MAINTENANCE MANUAL

VOLUME 1

INSTALLATION BY:

SJ Electric Group(Qld) Pty Ltd
19 Elliot Street
Albion Qld 4010

Telephone: 07 3256 1522 Fax: 07 3256 1533

INDEX

SECTION	***Main Auxiliary Switchboard*** ***Luggage Point Sewage Treatment Plant***
Volume 1 **1.**	**GENERAL** 1.1 General Workplace Health & Safety 1.2 Project Overview 1.3 Plant Maintenance 1.4 Electrical Control System 1.5 Control & Monitoring System
Volume 1 **2.**	**MANUFACTURER'S TECHNICAL DATA** 2.1 NHP Terasaki Air Circuit Breaker 2.2 NHP Standard Load Break Switches 2.3 ABB CT8_1200 CTs 2.4 NHP MCCBs 2.5 PowerLogic_EGX100_EGX100MG 2.6 Schneider Power Meter 2.7 Phoenix power supply
Volume 1 **3.**	**DRAWINGS**
Volume 1 **4.**	**INSPECTION & TEST RESULTS**
Volume 1 **5.**	**COMPLIANCE CERTIFICATES**

1. GENERAL

1.1 General Workplace Health and Safety

- The Workplace Health and Safety Act (2011) sets out the laws about Workplace Health and Safety for all workplaces, workplace activities and specified high risk plant. The Electrical Safety Act (2002) sets out the laws covering electrical safety. Nothing in this document is designed, in any way, to undermine the authority of the Acts.
- All reasonable care must always be taken to ensure the plant is without risk to the health and safety of personnel operating and maintaining plant and equipment.
- Employers have an obligation to ensure the workplace health and safety of all personnel at work.
- It is employer responsibility to ensure that all persons entering or working on the premises use appropriate personal protective equipment.
- Personal protective equipment includes gloves, safety glasses, hard hats, ear protection, safe foot ware and, where necessary, specialist protective clothing for hazardous areas.
- Any item of equipment should always be isolated before maintenance or repairs commence to ensure that inadvertent operation of the item does not result in risk to the health and safety of any person.
- Where the item is isolated, any total or partial shutdown should not allow a hazardous situation to be created.
- Where the item cannot be isolated, another person should be stationed at the controls of the item and an effective means of direct communication should exist between the persons carrying out the maintenance and the person at the controls.

General Operating Principles

- All persons working the premises must be qualified Electrical Engineers or electrical trades persons capable of performing the required tasks competently. All personnel must also be familiar with plant and equipment.
- Adequate information, instruction, training and supervision must be provided to enable personnel to perform work without risk to health and safety.
- Work in an orderly way.
- Plan work in advance to avoid hazardous situations.
- Warn others of any hazards.
- Make inquiries before starting work, particularly on any unfamiliar installation or equipment.
- Before any work begins ensure that any instructions received or given are fully understood.
- Concentrate on the task on hand.
- Do not distract others or allow yourself to be distracted by foolish actions.
- Work from a safe and convenient position that provides a maximum working space that you do not have to over reach, you cannot slip, trip or stumble and so endanger yourself and others.
- Keep the working area tidy and free of unwanted materials and equipment.
- Use insulated tools where possible.
- Inspect tools and equipment regularly and ensure that any necessary maintenance is carried out.
- Keep yourself in good health.
- Do not work if ill or over tired, to the extent that your concentration, movement or alertness is affected. Illness or fatigue can endanger yourself and others.
- The switchboard incorporates the latest technology in motor control, power monitoring, and instrumentation. It is important engineers,

technicians and operators are familiar with the equipment installed before attempting any adjustments, modifications or maintenance.

-
- The following Sections of this manual contain a comprehensive description of all equipment supplied, by SJ Electric. It is recommended that this manual be referred to before carrying out any work on any equipment.

1.2 Project Overview

Part of contract C1011-045 Order No: C202 was the Gibson Island STP Screens 415v Switchboard Design and Construct Replacement.

This contract involved the replacement of the ASB3/ESB3 switchboard with new, the removal of the RDSB(A) switchboard and incorporating the hardware from the Bagger Switchboard/ instrument panel in to the newly constructed ASB3 switchboard.

To make the most of the existing space the ASB3 switchboard was relocated onto the far wall of the switchroom, the screw conveyor starter cells the screw press starter cells and other instrumentation were relocated from the Bagger switchboard into the ASB3 switchboard therefore removing all switchboards from the centre of the room.

Location Details:

The follow pages show the old layout and the new layout of the Screens switchroom.

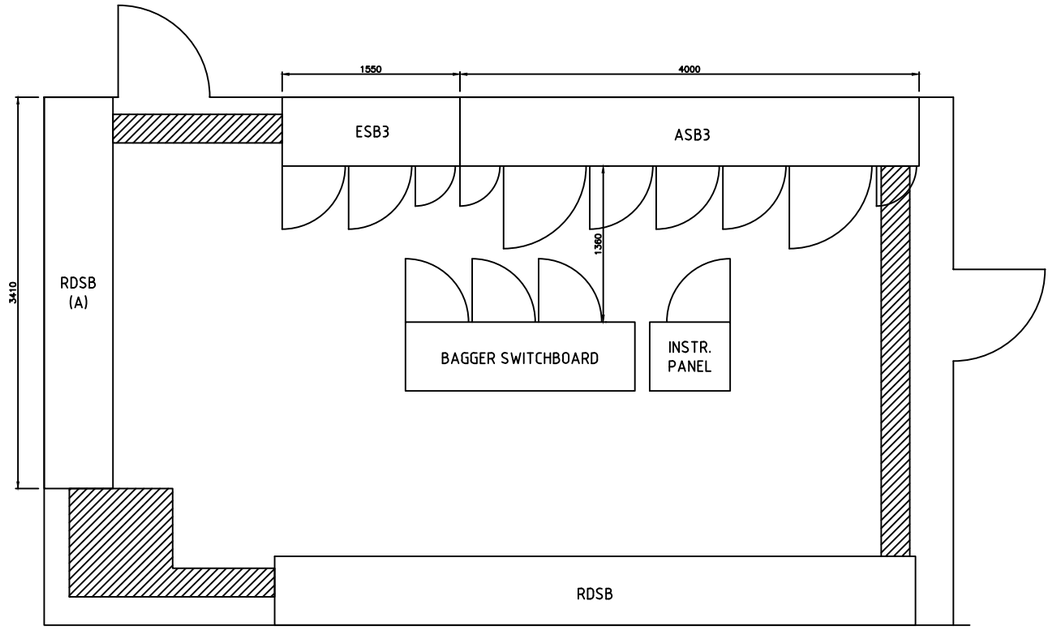

GIBSON ISLAND
SCREENS SWITCHROOM
EXISTING LAYOUT

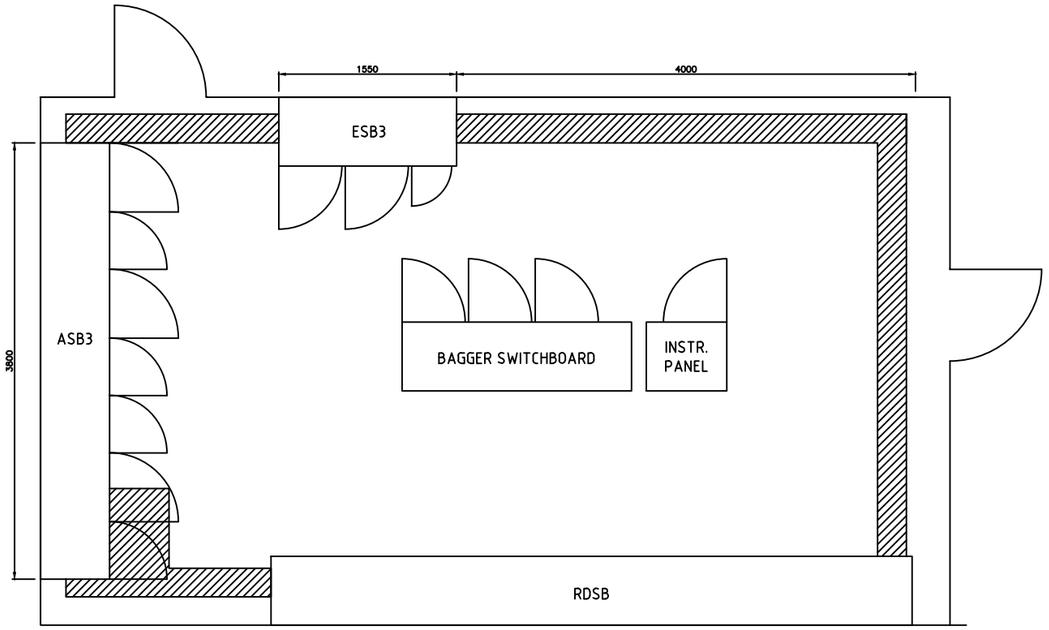

GIBSON ISLAND
SCREENS SWITCHROOM
PROPOSED LAYOUT

REV.	DRAWN BY	DATE	CHECKED BY	DESIGNED BY	ENGINEER	APPROVED BY	REVISION TITLE
A	H.GARDNER	12/14		H.GARDNER	H.GARDNER		CONCEPT DESIGN

SJ ELECTRIC QUEENSLAND
19 ELLIOT ST, ALBION QLD 4010
P 07 3256 1522 F 07 3256 1533
Email@sjelectric.com.au
www.trivantage.com.au
ABN 45 124 414 768 REC 73286
A DIVISION OF THE TRIVANTAGE GROUP

TITLE
GIBSON ISLAND
SCREENS SWITCHROOM
LAYOUT

DRAWING NO. 43402595-E-01
REV A
SCALE 1:20
SHEET 1 OF 1
CLIENT QUU
PROJECT NO. 43402595

INFORMATION DISCLOSED IN THIS DOCUMENT IS CONFIDENTIAL AND IS NOT TO BE COPIED OR REPRODUCED IN ANY FORM OR GIVEN TO ANY OTHER PERSON WHATSOEVER WITHOUT THE EXPRESS CONSENT OF SJELECTRIC PTY. LTD.

STANDARD DESIGNATION A3 - 420 x 297mm

1.3 Plant Maintenance

To ensure proper operation of the plant the following should be observed: -

- The plant should be kept clean and tidy at all times. Not only is this of aesthetic value, it extends equipment life.
- Check that all plant and equipment is operating correctly. Correctly operating equipment promotes overall plant efficiency.
- All items and areas of equipment should be cleaned regularly.

WARNING

- **Avoid directly hosing <u>any</u> drive motor or electrical item.**

- All maintenance, service, modifications and significant deviations from Normal operating conditions should be recorded in the Plant Service Log
- After a month of operation, check the tension of all bolts associated with the plant and thereafter periodically. Bolted connections on painted surfaces can loosen due to thinning of the paint underneath the bolt head-bearing surface. Motor mounting bolts and other bolted connections subjected to vibration should be periodically checked for loosening.

WARNING

- **Before starting work on any item ensure that the power supply is isolated, tagged off, and the item cannot be started.**

- The importance of preventative maintenance cannot be over-emphasized. Regular maintenance and suitable care of the equipment will ensure a long and reliable service life of the equipment.
- Many stoppages can be avoided by following the recommended maintenance procedures. Do not wait until you hear the grinding of

equipment that has broken down. If you see any item wearing down, replace it, before it causes damage to other associated items.

Preventive Maintenance

Maintenance procedures recommended to extend switchboard life are outlined as follows: -

- Switchboard exterior should be regularly wiped down with a solvent base cleaner such as “Spray & Wipe”. This will ensure longevity of the powder-coated surface.
- Accessible areas like distribution boards and motor starter panels should be cleaned with a vacuum cleaner to remove dust and foreign matter.
- PLC panels should be maintained as dust free as possible. Dusting with a dry rag is recommended - taking care not allows dust inside the I/O modules or processor.
- When removing or installing PLC modules care should be taken to ensure that power is turned off to the rack before modules are removed or installed.
- Connections and efficient operation of circuit breakers, contactors and isolators should be checked every 12 months - especially where connected to busbars.
- Busbar connections should be checked every 12 months.
- Globes for indicator lights should be checked on a weekly basis with any faulty lamps replaced.
- Cubicle Fans Filter should be inspected and cleaned frequently.

2. MANUFACTURER'S TECHNICAL DATA

2.1

TECHNICAL DATA SHEET

Equipment Type:	Air Circuit Breakers
Location:	Power Distribution
Model Numbers:	various
Manufacturer:	Terasaki
Supplier:	NHP Pty Ltd 16 Riverview Place Murarrie (07) 3909 4999

TEMPOWER 2 AIR CIRCUIT BREAKER

World's first "Double Break" ACB

POWER PROTECTION

TemPower2 Double Break

TemPower2 is the world's first "Double Break" ACB, having two breaking contacts per phase. The unique pole structure means that the short time withstand rating (I_{cw}1 second) is equal to the service short circuit breaking capacity (I_{cs}) for all models. Full selectivity is guaranteed up to the full system fault level. TemPower2 ACBs have one of the world's smallest depth resulting in space saving in switchboards. More than twenty design patents have been registered for the TemPower2 ACB.

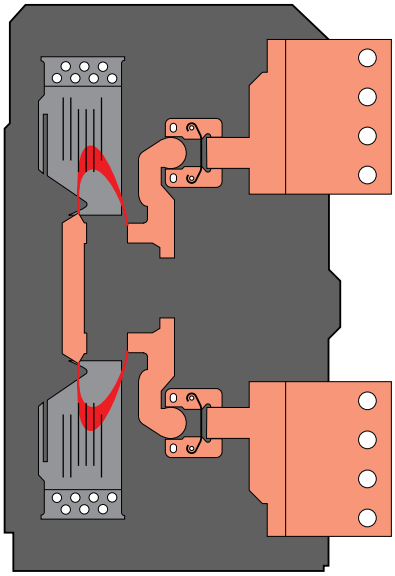

AR2 - AR4 "Double Break" contact design

AR2

AR2	800 A - 2000 A
AR3	1600 A, 2500 A - 3200 A
AR4	4000 A
AR6	5000 A - 6300 A

The "Double Break" system ensures extremely fast interruption of short circuit currents. The maximum clearing time is 30 msec*, less than half that of conventional ACBs.

Sharing the arc energy also substantially reduces main contact wear. All the arc energy is effectively dissipated within the "Double Break" arc chamber, thus achieving the required clearance distance to earthed metal of zero.

The 'TemPower2 AR6' (5000 A and 6300 A) has a unique contact design that interrupts the current at two points on the line side of the ACB, while dissipating heat from essential components such as the main contacts and terminals by efficient air convection through a pressure value.

The neutral pole of all TemPower2 ACBs is fully rated as standard and is of a **early make/late break design**. This eliminates the risk of abnormal line to neutral voltages, which may damage sensitive electronic equipment.

"Double Break" contacts increase service life – electrical and mechanical endurance ratings are the best available, and exceed the requirements of IEC 60947-2.

**AR6 (5000 A / 6300 A) has maximum total clearance time of 50 ms, 30 ms figure applies to AR2- AR4.*
Total clearance time is from initiation of fault to arc extinction

AR6

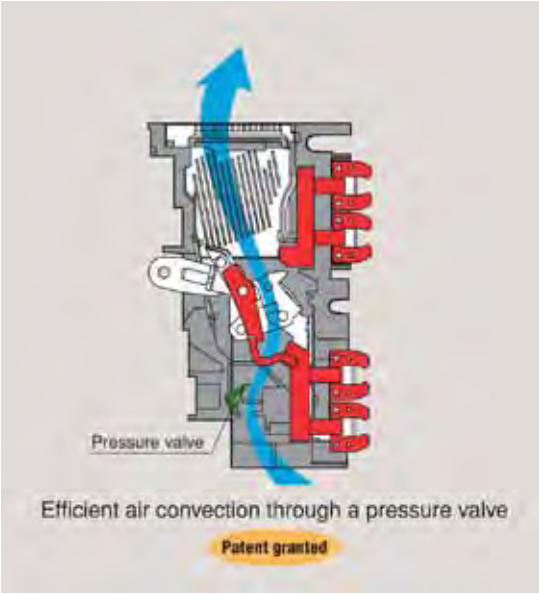

AR6 "dual line side break" contact design

Common frame sizes and dimensions

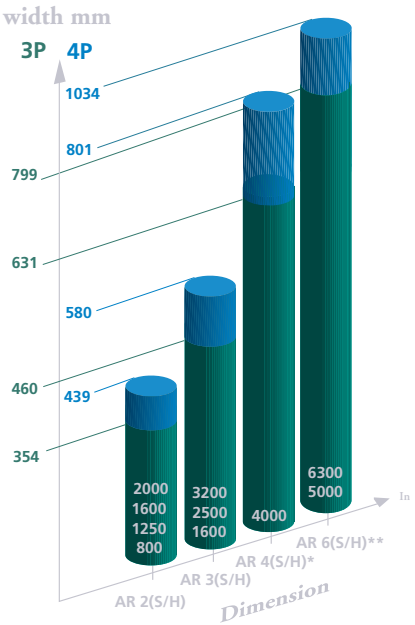

Uniform depth
*Draw-out type 345 mm(*375 mm, **380 mm)*

Uniform height
Draw-out type 460 mm

Interrupting capacities and short time withstand current

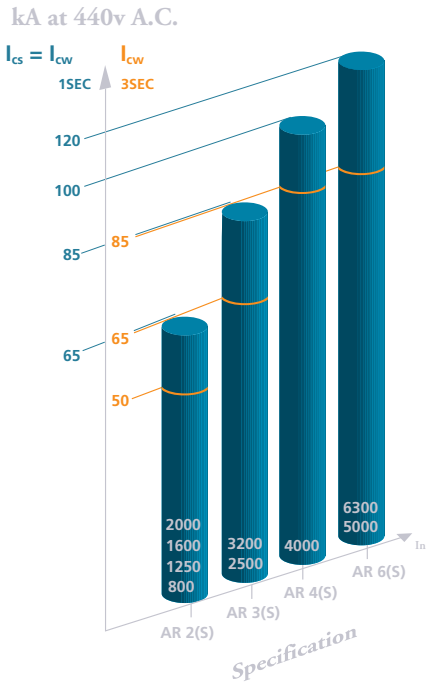

Standard I_{cs} model

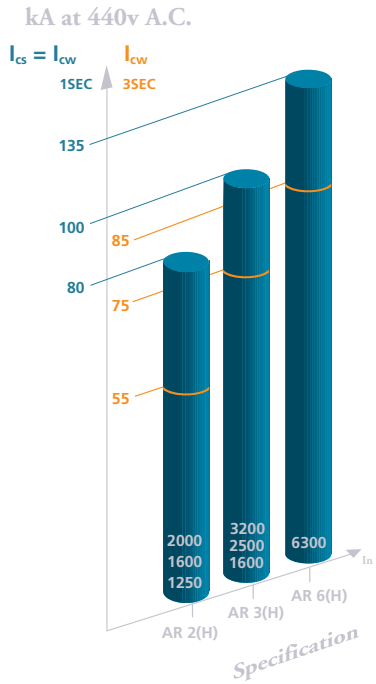

High I_{cs} model

Maximum power from minimum volume was central to the design specification. With a depth of 345 mm for draw-out up to 3200 A, it is one of the smallest ACBs in the world. Yet due to the influence of strict temperature rise limits contained within the Japanese Industrial Standard, its normal operating temperature is approximately 10% lower than other European manufacturers.
The double insulated design ensures that most internal accessories can be safely installed 'on site' without any danger of making accidental contact with the main internal power circuit. Control, auxiliary and position switch terminals are mounted at the front on the ACB body for easy access.

Horizontal, vertical and front terminal connections are available allowing for flexibility with busbar design. Front connections are especially suitable for smaller depth switchboards.

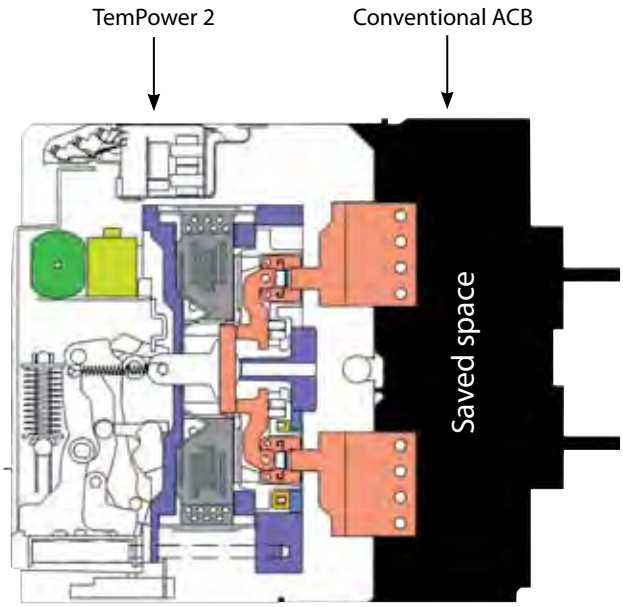

Our customers needs

Providing solutions

SWITCHBOARD BUILDER

- Compact size for high packing density
- Zero arc space required for clearance
- Low temperature dissipation
- Built in trip supervision circuit
- Fully rated neutral as standard
- Vertical, horizontal and front terminal connections are available
- Uniform panel cut out size
- Easy access to control, auxilary and position switch terminals
- Detailed product training available by NHP application engineers
- Manufactured in Australia, allowing for fast delivery and local technical support

CONSULTANT

- Approvals and test: IEC 60947, AS3947-2 and A.S.T.A. certified
- Time current characteristics to IEC 60255-3 (SI, VI, EI curves)
- Restricted and unrestricted ground fault protection in one relay
- LSI characteristic curves as standard
- True r.m.s. protection up to 19th harmonic
- Sophisticated undervoltage/phase failure protection
- Integral reverse power protection and load shedding relay
- Only Terasaki can offer I_{cw} = 100 kA / 1 second in a small 3200 A frame size
- TemPower2 ACB suffers no loss in performance when tripped through an external protection relay
- Super fast clearance times under fault

END USER

- System alarms that indicate tripping coil health
- Built in relay tester - can check on line without tripping ACB
- Contact temperature monitoring options
- Fault diagnosis - type of fault, magnitude, tripping time & trip history
- High making capacity for operator safety
- Communication to B.M.S. or S.C.A.D.A. system
- Main contacts can be changed within 15 minutes per pole
- Full technical support and ACB commissioning available via NHP
- Product servicing available from Australia's only Terasaki trained and certified ACB technicians

Power of protection

System protection requirements

Boasting an impressive range of standard features and specialised options, the Terasaki overcurrent release range is suitable for commercial, industrial and marine applications. The Terasaki OCR is divided into two performance ranges; the TEMPro PLUS and TEMPro PREMIER.

Overload protection

Adjustable from 40 - 100% of rated current. True r.m.s. detection up to the 19th harmonic, a distant vision for the competition who rarely see past the 7th. Neutral pole protection for all those Triple-N harmonics, such as 3rd, 9th and 15th.

Also in case we forgot to mention, a "thermal memory" as standard!

Data variable	TEMPro PLUS	TEMPro PREMIER
current-Ia	✓	✓
current-Ib	✓	✓
current-Ic	✓	✓
current-IN	✓	✓
current-Ig	✓	✓
line voltage-Vab	✗	✓
line voltage-Vbc	✗	✓
line voltage-Vca	✗	✓
power factor-Pf	✗	✓
frequency-(Hz)	✗	✓
active power-(kW)	✗	✓
total real energy-(kWh)	✗	✓
maximum current	✓	✓
maximum active power (kW)	✗	✓
maximum voltage	✗	✓

TEMPro PLUS

TEMPro PREMIER

Rapid short circuit protection

Total fault clearance in less than 30 msec reduces damage to the installation. A conventional ACB would take twice this time to interrupt a fault, but due to its unique "Double Break" system, the TemPower2 ACB is the quickest on the market ❖.

❖ *Compared to ACBs with comparable withstand ratings.*

Ground fault protection

Restricted and unrestricted ground fault protection available on the same relay *. There is no need to use a separate relay with TemPower2, thus saving panel space and cost.

Furthermore, fewer CT's and busbar connections are required which reduces heat and power consumption.

Special protection options

REVERSE POWER PROTECTION

Provides protection when paralleling generators. *

LOAD SHEDDING RELAY

Pre-trip alarm for non-essential load shedding.

N-PHASE PROTECTION

The N-phase protection function prevents the neutral conductor from sustaining damage or burnout due to large currents. *

UNDER VOLTAGE PROTECTION

With adjustable voltage pick up and an adjustable time delay. This provides fine tuning of all the voltage requirements. Phase failure protection is also available. * *

ZONE INTERLOCKING

Short time delay zone interlocking guarantees selectivity and minimises thermal and mechanical stress during a fault. *

OVERHEATING PROTECTION *Available mid 2011*

Continuous monitoring of the contact temperature provides valuable input for preventative and predictive maintenance programs. *

PHASE ROTATION PROTECTION *Available mid 2011*

Protects from negative-phase current occurring due to reverse phase or phase loss and prevents burnout of a motor or damage to equipment. *

* *Available on selected OCR models.*

* *3 phase UVT available only with external module, available mid 2011*

Power of selectivity

be selective with your protection release

Protection

Why use a separate panel mounted protection relay when you can have all the benefits of I.D.M.T. protection integral to the ACBs overcurrent relase (OCR)?

The 'TEMPro' series of OCR's is available with an 'R' characteristic, which provides a choice of flexible protection curves to assist in selectivity applications.

S.I. Standard Inverse

V.I. Very Inverse

E.I. Extremely Inverse

All these curves are user definable and comply with IEC 60255-3.
Standard transformer ('L' curve) and generator ('S' curve) protection characteristics are also available.

TEMPro with (L) curve - industrial & transformer protection

TEMPro with (S) curve - generator protection

TEMPro with (R) curve - characteristics to IEC 60255-3

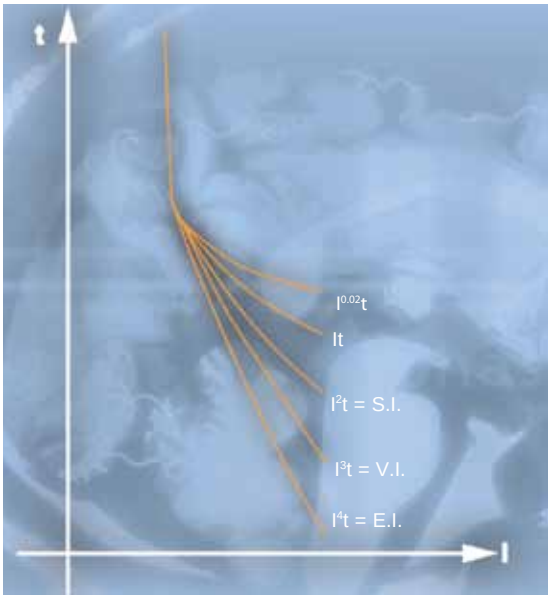

Inverse Definite Minimum Time (I.D.M.T.)

Selectivity

Terasaki are so serious about selectivity that all TEMPro overcurrent release units have adjustable 'LSI' characteristics as standard.

This provides an adjustable time delay on overload (L) and also the I^2t ramp characteristic (S).

As shown, these are essential to provide selectivity when grading with other protective devices such as downstream MCCBs, fuses and upstream relays.

The standard 'LSI' curve provides more than five million combinations of unique time current characteristics.

Zone selective interlocking is available to provide zero time delay selectivity.

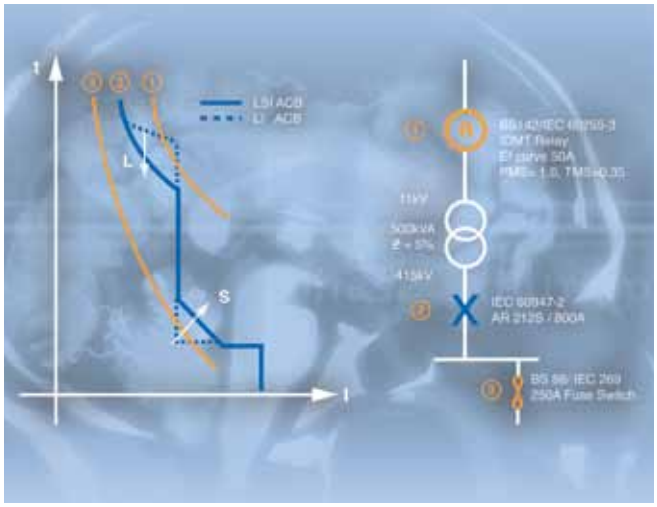

L Long time delay
S Short time delay
I Instantaneous

Power of the future

Intelligent communication

Modbus communications ready as standard

Energy Measurement

I, V, kW, MWh, cosø, frequency

Intelligent Fault Analysis

Status, fault type, fault size, tripping time, fault history

Maintenance Information

Trip circuit supervision, protection relay supervision, contact temperature alarm.

LOCAL DISPLAY

TEMPro Premier

OPERATION PANEL

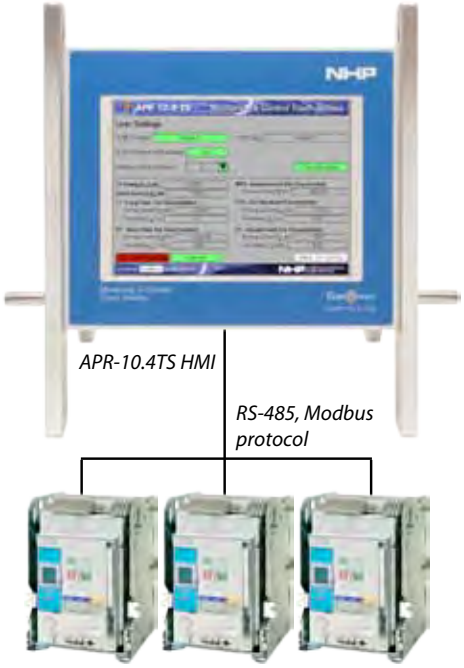

Protection and measurement specifications are met with the TemPower2 ACB.

Important information on energy consumption, fault analysis and maintenance can be displayed locally or transmitted to a B.M.S. or S.C.A.D.A. system.

REMOTE DISPLAY

Typical SCADA system

Innovation

The APR-10.4-TS remote monitoring and control touch screen for use with the Terasaki AR Air Circuit Breakers (ACBs), is ideal for ensuring total safety when maintenance staff are switching ACBs 'on' and 'off'.

A maximum of 14 ACBs can be networked for data monitoring and remote opening. ACBs fitted with the TEMPro PREMIER Over Current Release when networked to the APR-10.4-TS can be individually selected, indicating:

- Coloured open / close and trip status flags
- Line voltages (V_{12}, V_{23}, V_{31})
- Active power (kW)
- Reactive power (kVAr)
- Power factor (PF)
- Power consumption (kWh)
- Phase currents (I_1, I_2, I_3)
- Ground fault current (I_G) (if available)
- Frequency (Hz)
- Nature of trip (LT, ST, INST, GF)
- The last 10 trip details
- The last 10 alarm details

As standard the TEMPro PLUS and TEMPro PREMIER are equipped with a MODBUS-RTU communications facility. NHP also offers additional external communications interfaces for other protocols such as Profibus®, DeviceNet™ and Ethernet.

AUSTRALIA
nhp.com.au

SALES
1300 NHP NHP

VICTORIA

Melbourne
43-67 River Street
Richmond
VIC 3121
Tel +61 3 9429 2999

Laverton
104-106
William Angliss Drive
Laverton North
VIC 3026
Tel +61 3 9368 2901

Albury / Wodonga
847 Ramsden Drive
Albury
NSW 2640
Tel +61 2 6049 0600

Dandenong
40-42 Cyber Loop
Dandenong South
VIC 3175
Tel +61 3 8773 6400

TASMANIA

Hobart
2/65 Albert Street
Moonah
TAS 7009
Tel +61 3 6228 9575

Launceston
3/13-17 Merino Street
Kings Meadows
TAS 7249
Tel +61 3 6345 2600

NEW SOUTH WALES

Sydney
30-34 Day Street North
Silverwater
NSW 2128
Tel +61 2 9748 3444

Newcastle
575 Maitland Road
Mayfield West
NSW 2304
Tel +61 2 4960 2220

Wollongong
34 Industrial Road
Unanderra
NSW 2526
Tel +61 2 4272 5763

ACT

Canberra
1/187 Gladstone Street
Fyshwick
ACT 2609
Tel +61 2 6280 9888

WESTERN AUSTRALIA

Perth
38 Belmont Ave
Rivervale
WA 6103
Tel +61 8 9277 1777

NORTHERN TERRITORY

Darwin
3 Steele Street
Winnellie
NT 0820
Tel +61 8 8947 2666

QUEENSLAND

Brisbane
16 Riverview Place
Murarrie
QLD 4172
Tel +61 7 3909 4999

Townsville
5 Leyland Street
Garbutt
QLD 4814
Tel +61 7 4779 0700

Rockhampton
14 Robison Street
QLD 4701
Tel +61 7 4927 2277

Toowoomba
Cnr Carroll Street and
Struan Court
QLD 4350
Tel +61 7 4634 4799

Cairns
2/1 Bramp Close
Portsmith
QLD 4870
Tel +61 7 4035 6888

SOUTH AUSTRALIA

Adelaide
36-38 Croydon Road
Keswick
SA 5035
Tel +61 8 8297 9055

NEW ZEALAND
nhp-nz.com

SALES
0800 NHP NHP

PO Box 62-009
Mount Wellington
Auckland 1641
New Zealand

Auckland
118a Carbine Road
Mt Wellington 1060
Tel +64 9 276 1967

Hamilton
78 Rostrevor Street
Hamilton 3204
Tel +64 7 849 0257

Napier
126 Taradale Rd
Onekawa 4110
Tel +64 6 843 6928

New Plymouth
2 Dean Place
Waiwhakaiho 4312
Tel 0800 NHP NHP

Wellington
52 Victoria Street
Lower Hutt 5010
Tel +64 4 570 0634

Christchurch
85 Gasson Street
Sydenham 8023
Tel +64 3 377 4407

NHP Electrical Engineering Products Pty Ltd
A.B.N. 84 004 304 812

NTERASAKIT2ACBC 03/11 © Copyright NHP 2011

Environmentally Friendly
Printed on recycled paper

TECHNICAL DATA SHEET

Equipment Type:	Standard load break switches
Location:	Power Distribution
Model Numbers:	various
Manufacturer:	Terasaki
Supplier:	NHP Pty Ltd 16 Riverview Place Murarrie (07) 3909 4999

SLB Standard load-break switches

New Range

COMO M 20 to 100 A

SLB 20...40

The COMO M range of load-break switches offer compact IP 20 finger safe solutions for switching up to and including 100 A. They are ideal for the arduous switching of motors.

Standard mounting is by DIN rail or base mount with screws.

The COMO M comes complete with direct mount handle, or pistol handles and shaft. Fourth pole and auxiliary switching can also be achieved with easy clip-on modules - refer accessories.

Front operated surface mount

(Supplied with direct or external handle)

		AC 22 400 V (A)	AC 23 400 V (A)	AC 23 400 V (kW)	Handle type	Cat. No.
20 A	FRAME SIZE M1	20	20	9	Direct	SLB 20D 3P
					Pistol	SLB 20P 3P
25 A		25	25	11	Direct	SLB 25D 3P
					Pistol	SLB 25P 3P
32 A		32	32	15	Direct	SLB 32D 3P
					Pistol	SLB 32P 3P
40 A		40	40	18.5	Direct	SLB 40D 3P
					Pistol	SLB 40P 3P
63 A	FRAME SIZE M2	63	63	30	Direct	SLB 63D 3P
					Pistol	SLB 63P 3P
80 A		80	80	40	Direct	SLB 80D 3P
					Pistol	SLB 80P 3P
100 A		100	80	40	Direct	SLB 100D 3P
					Pistol	SLB 100P 3P

SLB 63...100

SLB Standard load-break switches

SIRCO 125 to 4000 A

New Range

SLB 125...630

The SIRCO range of load-break switches offer compact solutions for switching from 125 A to 4000 A. Base mounting is standard.

The SIRCO range are a proven, reliable design that more than suit harsh Australian conditions.

The switches come complete with extended shaft and door mountable pistol grip handle. Available in three and four pole versions with a large range of accessories to choose from.

Front operated surface mount

(Supplied with external handle and shaft)

	AC 21 400 V (A)	AC 23 400 V (A)	AC 23 400 V (kW)	No. of poles [1])	Cat. No.
125 A	125	125	63	3	SLB 125 3P
				4	SLB 125 4P
160 A	160	160	80	3	SLB 160 3P
				4	SLB 160 4P
200 A	200	200	100	3	SLB 200 3P
				4	SLB 200 4P
250 A	250	250	132	3	SLB 250 3P
				4	SLB 250 4P
315 A	315	315	160	3	SLB 315 3P
				4	SLB 315 4P
400 A	400	400	220	3	SLB 400 3P
				4	SLB 400 4P
500 A	500	400	280	3	SLB 500 3P
				4	SLB 500 4P
630 A	630	500	280	3	SLB 630 3P
				4	[i] SLB 630 4P
800 A	800	800	450	3	SLB 800 3P
				4	[i] SLB 800 4P

Notes: [1]) 6 and 8 pole switches available on indent. Refer NHP.
[i] Available on indent only.

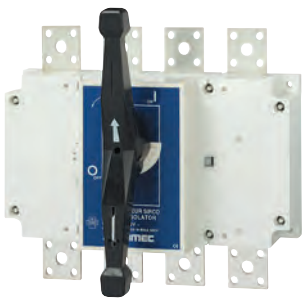

SLB 800...3150

SLB Standard load-break switches

SIRCO 125 to 4000 A (cont'd)

New Range

The SIRCO range of load-break switches offer compact solutions for switching from 125 A to 4000 A. Base mounting is standard.

The SIRCO switches come complete with extended shaft and door mountable pistol grip handle. Available in three and four pole versions with a large range of accessories to choose from.

SLB 800...3150

Front operated surface mount

(Supplied with external handle and shaft)

	AC 21 400 V (A)	AC 23 400 V (A)	AC 23 400 V (kW)	No. of poles [1])	Cat. No.
1000 A	1000	1000	560	3	SLB 1000 3P
				4	[i] SLB 1000 4P
1250 A	1250	1000	560	3	SLB 1250 3P
				4	[i] SLB 1250 4P
1600 A	1600	1000	560	3	SLB 1600 3P
				4	[i] SLB 1600 4P
1800 A	1800	1000	560	3	SLB 1800 3P
				4	[i] SLB 1800 4P
2000 A	2000	1250	710	3	SLB 2000 3P
				4	[i] SLB 2000 4P
2500 A	2500	1250	710	3	SLB 2500 3P
				4	[i] SLB 2500 4P
3150 A	3150	1250	710	3	SLB 3150 3P
				4	[i] SLB 3150 4P
4000 A	4000	1250	710	3	SLB 4000 3P [2])
				4	[i] SLB 4000 4P [2])

Notes: [1]) 6 and 8 pole switches available on indent. Refer NHP.
[2]) Supplied with 2 N/O and 2 N/C auxiliaries as standard.
[i] Available on indent only.

SLB 4000

Technical data and dimensions (mm)

COMO M SLB 20 to 100 A

COMO M 20 to 40 A

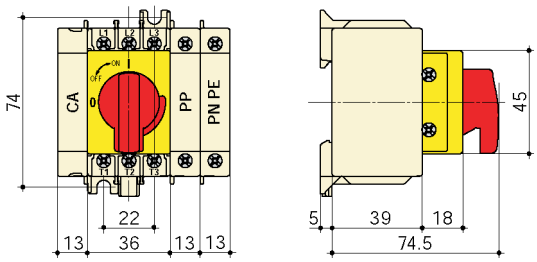

COMO M 63 to 100 A

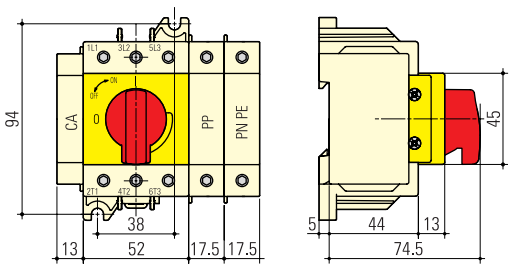

COMO M Selector handle door drilling

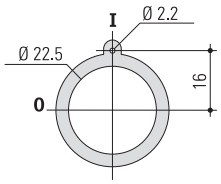

COMO M Pistol handle door drilling

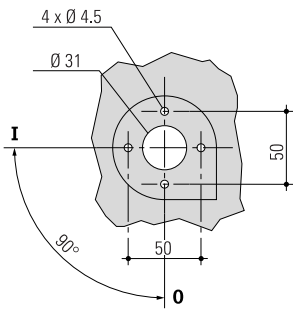

Technical data and dimensions (mm)

SIRCO SLB 125 to 2500 A

SIRCO 125 to 2500 A

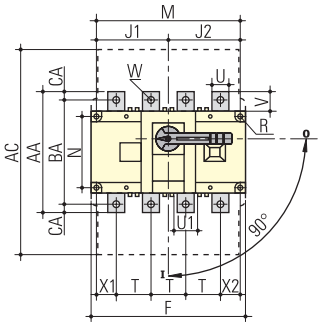

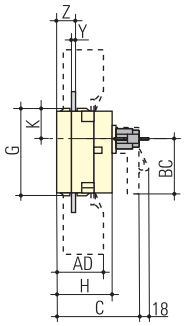

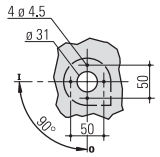

Door Drilling

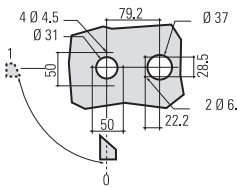

Castell drilling

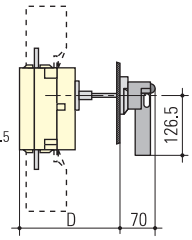

Rating	Overall dimensions		Terminal shrouds		Switch body									Switch mounting				Connection terminals												
A	C	D	AC	AD	F 3p	F 4p	G	H	J1 3p	J1 4p	J2	K	BC	M 3p	M 4p	N	R	T	U	U1	V	W	X1 3p	X1 4p	X2	Y	Z	AA	BA	CA
125	120	124...354	235	50	140	170	93	65	45	75	75	31.5	80	120	150	65	5.5	36	20	20.5	25	9	28	22	20	3.5	20.5	135	115	10
160	120	124...354	235	50	140	170	93	65	45	75	75	31.5	80	120	150	65	5.5	36	20	20.5	25	9	28	22	20	3.5	20.5	135	115	10
200	130	135...365	290	60	180	230	108	75	55	105	105	34	115	160	210	80	5.5	50	25	25.5	30	11	33	33	27	3.5	22.5	160	130	15
250	130	135...365	290	60	180	230	108	75	55	105	105	34	115	160	210	80	5.5	50	25	25.5	30	11	33	33	27	3.5	22.5	160	130	15
315	165	167...397	401	89	230	290	170	110	75	135	135	55	115	210	270	140	7	65	32	45.5	37.5	11	42.5	37.5	37.5	5	36	235	205	15
400	165	167...397	401	89	230	290	170	110	75	135	135	55	115	210	270	140	7	65	32	45.5	37.5	11	42.5	37.5	37.5	5	36	235	205	15
500	165	167...397	401	89	230	290	170	110	75	135	135	55	115	210	270	140	7	65	32	45.5	37.5	13	42.5	37.5	37.5	5	36	235	205	15
630	165	167...397	400	89	230	290	170	110	75	135	135	55	115	210	270	140	7	65	45	45.5	50	13	42.5	37.5	37.5	5	36	260	220	20

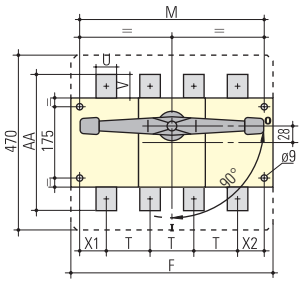

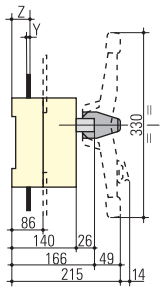

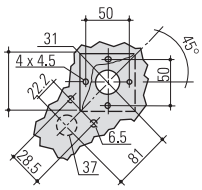

Castell Drilling

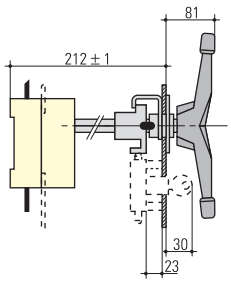

Rating	Switch body		Switch mounting		Connection terminals							
A	F 3p	F 4p	M 3p	M 4p	T	U	V	Y	X1	X2	Z	AA
800	280	360	255	335	80	50	60.5	7	47.5	47.5	46.5	321
1000	280	360	255	335	80	50	60.5	7	47.5	47.5	46.5	321
1250	372	492	347	467	120	90	44	8	53.5	53.5	47.5	288
1600	372	492	347	467	120	90	44	8	53.5	53.5	47.5	288
1800	372	492	347	467	120	90	44	8	53.5	53.5	47.5	288

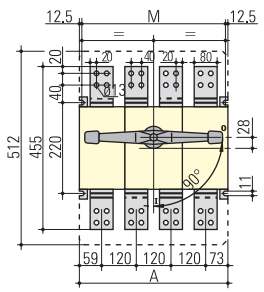

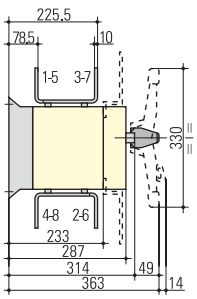

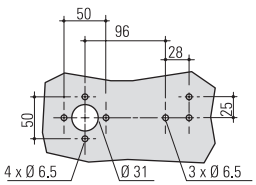

Castell Drilling

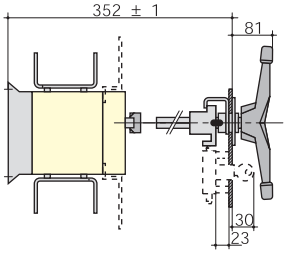

Rating	Overall dimensions		Switch mounting	
A	A 3p	A 4p	M 3p	M 4p
2000	372	492	347	467
2500	372	492	347	467

Technical data and dimensions (mm)

SIRCO SLB 3150 to 4000 A

SIRCO 3150 A

Rating A	Overall dimensions A 3p	A 4p	Switch mounting M 3p	M 4p
3150	372	492	347	467

SIRCO 4000 A

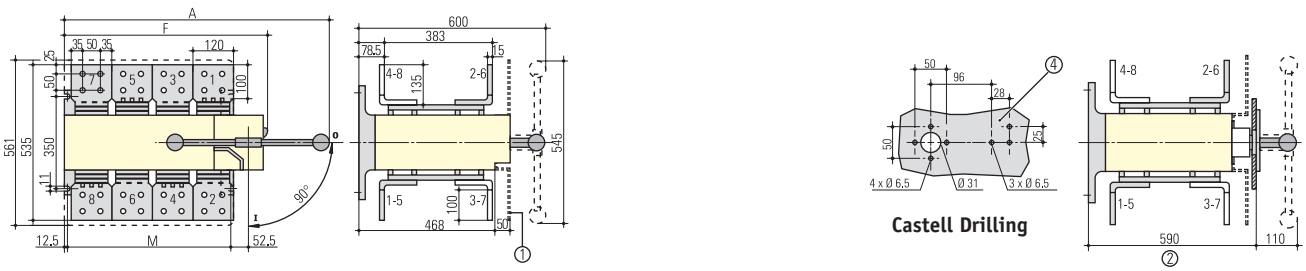

Rating A	Overall dimensions A 3p	A 4p	Switch body F 3p	F 4p	Switch mounting M 3p	M 4p
4000	684	804	470	590	347	467

SIRCO Connection terminals - 800 to 4000 A

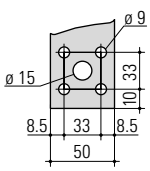

800 - 1000 A

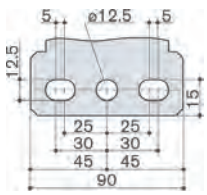

1250 - 1800 A

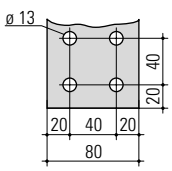

2000 - 2500 A

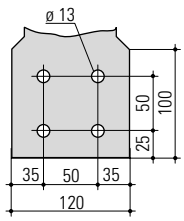

3150-4000 A

Technical data and ratings chart

COMO M SLB 20 to 100 A

Ratings to AS 3947-3 and IEC 60947-3

			20 A	25 A	32 A	40 A	63 A	80 A	100 A
Rated insulation voltage and rated operation voltage AC 20/DC 20		V	800	800	800	800	800	800	800
Rated impulse withstand voltage		kV	8	8	8	8	8	8	8
Rated operational current									
AC 21A	400 V	A	20	25	32	40	63	80	100
	500 V	A	20	25	32	40	63	80	100
	690 V	A	20	25	32	40	63	80	100
AC 22A	400 V	A	20	25	32	40	63	80	100
	500 V	A	20	25	32	40	63	80	100
	690 V	A	20	25	32	40	63	80	100
AC23A	400 V	A	20	25	32	40	63	80	80
	500 V	A	16	20	25	32	50	63	63
	690 V	A	16	20	20	20	50	50	50
Rated operational current									
DC 21A	400 V	A							
	500 V	A							
DC 22A	400 V	A	Refer NHP						
	500 V	A							
DC 23A	400 V	A							
	500 V	A							
Operational power									
AC 23A	400 V	kW	9	11	15	18.5	30	40	40
	500 V	kW	9	11	15	18.5	33	40	40
	690 V	kW	11	15	15	15	45	45	45
Overload capacity									
Short time withstand current Icw (RMS 1s) 690 V		kA	1.26	1.26	1.26	1.26	1.5	1.5	1.5
Breaking capacity AC 23A	400 V	A	160	200	256	320	504	640	640
Fuse protected short circuit withstand. (kA RMS prospective)	400 V AC	kA	50	50	50	50	25	25	25
	Fuse	A	20	25	32	40	63	80	100
Mechanical endurance		Ops	100000	100000	100000	100000	30000	30000	30000
Weight (3 pole)		Kg	0.13	0.13	0.13	0.13	0.25	0.25	0.25
Min. tightening torque		Nm	2	2	2	2	4	4	4
Connection cable size		mm^2	2.5/16	2.5/16	4/16	6/16	16/50	16/50	25/50

Note: 240/415 V ratings suitable for use on 230/400 V in accordance with AS 60038 : 2000.

Technical data and ratings chart

SIRCO SLB 125 to 630 A

Ratings to AS 3947-3 and IEC 60947-3

			125 A	160 A	200 A	250 A	315 A	400 A	500 A	630 A
Rated insulation voltage and rated operation voltage AC 20/DC 20		V	800	800	800	800	1000	1000	1000	1000
Rated impulse withstand voltage		kV	8	8	8	8	12	12	12	12
Rated operational current										
AC 21A	400 V	A	125	160	200	250	315	400	500	630
	500 V	A	125	160	200	250	315	400	500	630
	690 V	A	125	160	200	250	315	400	500	500
AC 22A	400 V	A	125	160	200	250	315	400	500	630
	500 V	A	125	125	200	250	315	400	500	500
	690 V	A	-	-	-	125	250	250	250	315
AC23A	400 V	A	125	160	200	250	315	400	500	500
	500 V	A	100	100	160	200	315	315	315	315
	690 V	A	-	-	-	100	160	160	160	160
Rated operational current										
DC 21A	400 V	A	125	160	160	250	315	400	400	630
	500 V	A	125	125	160	200	315	400	400	500
DC 22A	400 V	A	125	160	160	200	315	400	400	500
	500 V	A	125	125	160	200	315	315	315	500
DC 23A	400 V	A	125	125	160	200	315	400	400	500
	500 V	A	125	125	160	200	315	400	400	500
Operational power										
AC 23A	400 V	kW	63	80	100	132	160	220	280	280
	500 V	kW	63	63	110	140	220	220	220	220
	690 V	kW	55	55	75	90	150	150	150	150
Overload capacity										
Short time withstand current Icw (RMS 1s) 690 V		kA	7	7	9	9	13	13	13	13
Breaking capacity AC 23A	400 V	A	1000	1280	1600	2000	2520	3200	4000	4000
Fuse protected short circuit withstand. (kA RMS prospective)	400 V AC	kA	100	100	80	50	100	100	100	70
	Fuse	A	125	160	200	250	315	400	500	630
Rated capacitor power		kVAr	55	75	90	115	145	185	230	290
Mechanical endurance		Ops	10000	10000	10000	10000	5000	5000	5000	5000
Weight (3 pole)		Kg	1	1.5	2	2	3.5	3.5	3.5	3.5
Min. tightening torque		Nm	6.5	6.5	10	10	15.4	14.5	14.5	14.5
Connection cable size		mm^2	35/50	50/95	70/95	95/150	150/240	185/240	240/240	2 (150/300)

Note: 240/415 V ratings suitable for use on 230/400 V in accordance with AS 60038 : 2000.

Technical data and ratings chart

SIRCO SLB 800 to 4000 A

Ratings to AS 3947-3 and IEC 60947-3

			800 A	1000 A	1250 A	1600 A	1800 A	2000 A	2500 A	3150 A	4000 A
Rated insulation voltage and rated operation voltage AC 20/DC 20		V	1000	1000	1000	1000	1000	1000	1000	1000	1000
Rated impulse withstand voltage		kV	12	12	12	12	12	12	12	12	12
Rated operational current											
AC 21A	400 V	A	800	1000	1250	1600	1600	2000	2500	3150	3150
	500 V	A	800	1000	1250	1600	1600	2000	2500	3150	3150
	690 V	A	800	1000	1000	1600	1600	2000	2000	2000	2000
AC 22A	400 V	A	800	1000	1250	1250	1250	2000	2000	2500	2500
	500 V	A	800	1000	1000	1250	1250	1600	1600	2000	2000
	690 V	A	800	630	630	800	800	1000	1000	1000	1000
AC 23A	400 V	A	800	1000	1000	1000	1000	1250	1250	1250	1250
	500 V	A	630	800	800	1000	1000	1000	1000	1000	1000
	690 V	A	200	400	400	500	500	800	800	800	800
Rated operational current											
DC 21A	400 V	A	800	1000	1250	1600	1600	2000	2000	2000	2000
	500 V	A	630	1000	1250	1250	1250	1250	1250	1250	1250
DC 22A	400 V	A	800	1000	1250	1250	1250	1250	1250	1250	1250
	500 V	A	800	1000	1250	1250	1250	1250	1250	1250	1250
DC 23A	400 V	A	800	1000	1000	1000	1000	1000	1000	1000	1000
	500 V	A	800	1000	1000	1000	1000	1000	1000	1000	1000
Operational power											
AC 23A	400 V	kW	450	560	560	560	560	710	710	710	710
	500 V	kW	450	560	560	710	710	710	710	710	710
	690 V	kW	185	400	400	475	475	750	750	750	750
Overload capacity											
Short time withstand current Icw (RMS 1s) 690 V		kA	26	35 [1])	50	50	50	50	50	55	70
Breaking capacity AC 23A	400 V	A	6400	8000	8000	8000	8000	10000	10000	10000	10000
Fuse protected short circuit withstand. (kA RMS prospective)	400 V AC	kA	50	100	100	100	100	100	100	-	-
	Fuse	A	800	1000	1250	2x800	2x800	2x1000	2x1000	-	-
Rated capacitor power		kVAr	365	460	575	-	-	-	-	-	-
Mechanical endurance		Ops	4000	4000	4000	3000	3000	3000	2500	2500	2500
Weight (3 pole)		Kg	8	10.5	10.5	16	17	31	32	42	90
Min. tightening torque		Nm	37	37	37	50	50	60	60	60	110
Connection cable size		mm^2	2 (185/300)	2 240/4 185	4 185 max	6 240 max	-	-	-	-	-

Notes: [1]) 50 kA switch available in larger frame size. Refer NHP.
240/415 V ratings suitable for use on 230/400 V in accordance with AS 60038 : 2000.

TECHNICAL DATA SHEET

Equipment Type:	Current Transformers
Location:	Power Distribution
Model Numbers:	CT8/1200
Manufacturer:	ABB
Supplier:	Dore Electric 20 Devlan Street, Mansfield QLD 4122 (07) 3349 5300

CT8/1200

ABB contact for Australia

Print View..
Print to Pdf..

General Information

Extended Product Type:	CT8/1200
Product ID:	2CSG521200R1101
EAN:	8012542607205
Catalog Description:	CT8/1200 Current transformer
Long Description:	CT8/1200 is used to transform primary currents to../5A secondary currents for c.a. measurement instruments

Categories

Products » Low Voltage Products and Systems » Modular DIN Rail Products » Modular DIN Rail Components MDRCs » Modular Measuring Instruments

Ordering

EAN:	8012542607205
Minimum Order Quantity:	1 piece
Customs Tariff Number:	85043121

Dimensions

Product Net Width:	0.090 m
Product Net Height:	0.145 m
Product Net Depth:	0.140 m
Product Net Weight:	0.745 kg

Container Information

Package Level 1 Units:	1 piece
Package Level 1 Width:	0.142 m
Package Level 1 Height:	0.063 m
Package Level 1 Length:	0.125 m
Package Level 1 Gross Weight:	1 kg
Package Level 1 EAN:	8012542607205
Package Level 2 Units:	1 piece
Package Level 2 Gross Weight:	0.500 kg

Technical

Mounting Type:	DIN-Rail and bar mounting
Cable Use:	Cable and Horizontal bar
Cable Cross-Section:	2 x 30 mm
Rated Cross-Section:	80 x 30 mm
Rated Primary Current (I_{pn}):	1200 A

Environmental

RoHS Status:	Following EU Directive 2002/95/EC August 18, 2005 and amendment

Certificates and Declarations (Document Number)

Declaration of Conformity - CE:	ITSCE115CT
RoHS Information:	2CSC445004K0201

Classifications

Object Classification Code:	T
ETIM 4.0:	EC002048 - Current transformer

ETIM 5.0: EC002048 - Current transformer

TECHNICAL DATA SHEET

Equipment Type:	Molded Case Circuit Breakers
Location:	Power Distribution
Model Numbers:	various
Manufacturer:	Terasaki
Supplier:	NHP Pty Ltd 16 Riverview Place Murarrie (07) 3909 4999

Power Distribution

ELR-C 06-010

MOULDED CASE CIRCUIT BREAKERS TECHNICAL CATALOGUE

TERASAKI
Innovators in Protection Technology

TemBreak 2

INDUSTRIAL SWITCHGEAR & AUTOMATION SPECIALISTS

NHP

BEYOND THE STANDARD ™

NHP's beginnings span back to 1968, when company founder, Nigel H Peck, had a vision to create a 100 % Australian owned and operated switchgear company. In a market dominated by large internationals, Nigel seized the opportunity to offer Australian customers unprecedented service and a wide range of quality products.

Head Office Complex - Richmond, Melbourne

At NHP, our focus on service and quality has enabled us to evolve from a small business of only 15 employees, to a prominent company with over 500 employees and offices in 14 key locations throughout Australia and New Zealand.

Today, NHP sources quality products from over 50 specialist manufacturers worldwide based on the carefully researched needs and requirements of Australasian industry. Our product offerings encompass the key areas of:

- Motor Control
- Power Distribution
- Automation & Communication
- Control & Switching
- Safety & Protection
- Power Quality
- Hazardous Location
- Sensing & Detection
- Monitoring & Display
- Enclosures & Termination
- Contractor Products

NHP serves a diverse range of customers and specifiers: from electrical contractors, electrical wholesalers, original equipment manufacturers, engineering consultants, switchboard manufacturers to a variety of end users (e.g., mining, manufacturing, electrical and gas utilities and agriculture just to name a few).

National Distribution and Manufacturing Facility - Laverton, Melbourne

NHP goes to great lengths to deliver the highest level of service to all of our customer groups. We have recognised that it not only takes world class facilities to deliver this – but also a world class team of dedicated personnel.

With the largest product management, technical & engineering support and sales team in the Australasian electrical industry, we are fully equipped to provide customers with product and application solutions, application troubleshooting advice, field service and after-sales support - NHP's quality 'value add'. Further more, our "Emergency Breakdown Service" is available 24 hours a day, 7 days a week, 365 days a year. Manufacturing facilities for emergency product conversion, adaptation and fast track manufacturing are available in all of our branches across Australia and New Zealand.

At NHP, our policy of "on time-in full" supply requires expansive stock holdings located close to customers, coupled with an extensive distribution network, ensuring that product is available when and where our customers need it. Our "National Distribution and Manufacturing Centre" in Laverton, located between the shipping terminal and airport, facilitates our ability to value add and customise as required to suit specific customers needs.

NHP's commitment to quality and service continues today and into the future and underpins our primary focus - passion for the customer.

Major Australian Offices

Sydney

Brisbane

Perth

Adelaide

New Zealand Offices

Auckland

Christchurch

THE TEMBREAK 2 PRODUCT LINES

TEMBREAK 2

MOULDED CASE CIRCUIT BREAKERS

Rated current (I_n) from 20A to 630A. Breaking Capacity (I_{cu}) from 25kA to 200kA at 415V AC.

TEMBREAK 2

MOULDED CASE CIRCUIT BREAKERS

16A TO 630A

1. Welcome to TemBreak 2
   - Easy Selection Guide 5
   - 10 Reasons to use TemBreak 2 7
   - Safety Plus 9
   - Exceeding Standards 11
   - Reducing Environmental Impact 12
2. Ratings and Specifications
3. Operating Characteristics
4. Application Data
5. Accessories
6. Installation
7. Dimensions

WELCOME TO TEMBREAK 2

EASY SELECTION GUIDE

The TemBreak 2 range of products includes:

- Moulded Case Circuit Breakers (MCCBs)
- Switch-Disconnectors in the same compact moulded case frame sizes as MCCBs
- A comprehensive range of accessories which are common to MCCBs and Switch-Disconnectors. All internal accessories are common to all frame sizes.

Key to Model and Type Designations

Model Denoted by

Type Denoted by

E	Economical
S	Standard
H	High
L	Limiting*

C	Low breaking capacity
N	Medium breaking capacity
G	High breaking capacity
P	Extra High breaking capacity

S	125	G	J

Frame rating, In (A)

F	Fixed thermal, fixed magnetic
J	Adjustable thermal, adjustable magnetic
E	Electronic protection
N	No protection

*All TemBreak 2 MCCBs limit short-circuit faults by opening in less than 5ms. Limiting (L) models open particularly quickly.

WELCOME TO TEMBREAK 2

EASY SELECTION GUIDE

MCCBs

	125			160/250			400/630		
	Model	Type	Icu (kA)	Model	Type	Icu (kA)	Model	Type	Icu (kA)
E	E125	NJ	25	E250	NJ	25	E400	NJ	25
							E630	NE	36
S	S125	NF	25	S160	NF	25	S400	CJ	36
	S125	NJ	36	S160	NJ	36	S400	NJ	50
	S125	GJ	65	S160	GJ	65	S400	GJ	70
				S250	NJ	36	S400	NE	50
				S250	GJ	65	S400	GE	70
				S250	PE	70	S630	CE	50
							S630	GE	70
H	H125*	NJ	125	H160	NJ	125	H400	NJ	125
				H250	NJ	125	H400	NE	125
L	L125*	NJ	200	L160	NJ	200	L400	NJ	200
				L250	NJ	200	L400	NE	200
	In (A)								
	125 ↕ 16			250 ↕ 20			630 ↕ 250		

Switch-Disconnectors

125		160/250		400/630	
Model	Type	Model	Type	Model	Type
S125	NN	S160	NN	S400	NN
		S250	NN	S630	NN

Note: All breaking capacities are r.m.s. symmetrical at 415V AC
*250A Frame

REASONS TO USE TEMBREAK 2

1. FIELD-INSTALLABLE ACCESSORIES

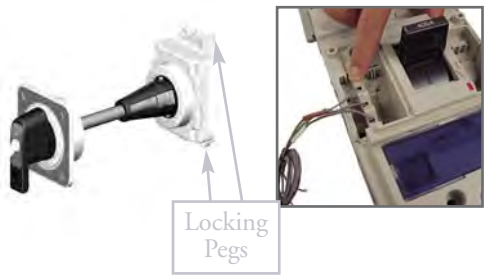

- Accessories can be fitted by the switchboard builder or added by the end-user. All internal accessories are common for TemBreak 2 MCCBs.
- Handles and motor operators can be rapidly fitted using the locking pegs. It takes **less than 10 seconds to secure a handle or motor** to the MCCB – a great time saving compared to alternative products.
- All accessories are endurance tested to the same level as the host MCCB.

2. SAFETY LOCK FOR PLUG-IN VERSIONS

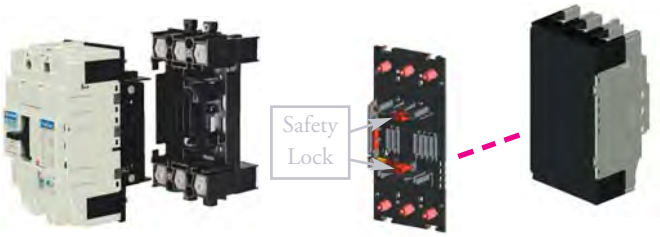

Plug-in MCCB and base *Plug-in connection kit, including safety lock*

The plug-in MCCB is locked to the base when the toggle is ON. It cannot be removed unless the toggle is OFF or TRIPPED. The safety lock prevents a trip occurring as the MCCB is being removed from the base.

3. SYMMETRICAL DOOR CUTOUT PATTERNS

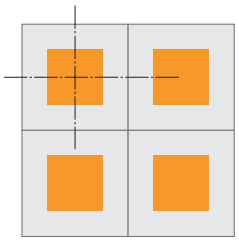

Using TemBreak 2 Operating Handles

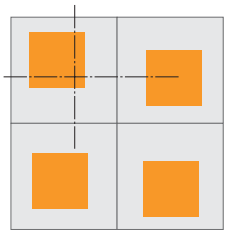

Using other MCCB Operating Handles

Door cutout patterns for handles are symmetrical, even when breakers are mounted in opposite directions.

4. SUPERIOR TEMPERATURE PERFORMANCE

All TemBreak 2 MCCBs are fully rated for use in tropical environments.

Overheating is the most common cause of failure in electrical switchgear. You can reduce the likelihood of overheating by using switchgear with superior temperature performance.

5. MODULAR SIZES

All current ratings up to 630A can be supplied in **2 sizes:** the 250A and 630A sizes.

The compact 125A size offers **the same** features and performance but with reduced dimensions and cost.

REASONS TO USE TEMBREAK 2

6. COMPACT CHANGEOVERS

Changeover Pair with Link Interlock and Motor Operators

Viewed from Below (250A frame)

The mechanical interlock is installed on the front of the MCCB, and is compatible with motor operators and handles. An automatic changeover system can be assembled in a few minutes by a switchboard builder or end-user.

7. DIRECT OPENING

Under the heading "Measures to minimise the risk in the event of failure", IEC 60204-1 Safety of Machinery-Electrical Equipment of Machinery includes the following recommendation:

"-the use of switching devices having positive (or direct) opening operation."

8. UNSURPASSED FLEXIBILITY

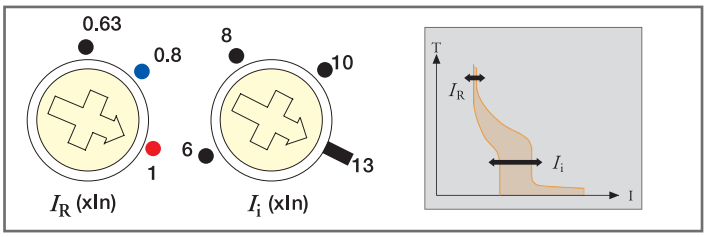

Overload protection is adjustable between 63% and 100% of the rating.

Short-circuit protection is adjustable on all thermal magnetic models.

Short-circuit protection settings are suitable for motor starting on all models, including the compact 125A frame.

9. CUSTOMISED TRIPPING TIMES

If you require a characteristic which is not available as a preset on our electronic protection unit, send us the details and we will program a customised characteristic to suit your application. (Within certain limits - contact us for details).

10. VISUAL SAFETY

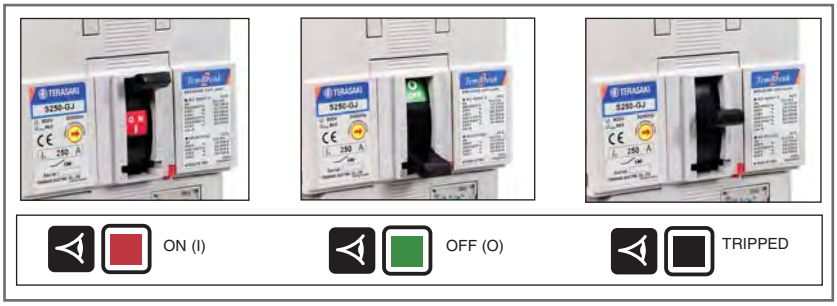

Coloured indicators display the ON or OFF status. The indicators are fully covered if the breaker trips, and black is the only visible colour.

WELCOME TO TEMBREAK 2

SAFETY PLUS

Terasaki have an innovative approach to product design. Our goal is to develop products which not only meet, but exceed recognised standards.

We use our knowledge of related applications to improve circuit breaker designs. For instance, when developing the Direct Opening Action, we applied ideas from a machinery safety standard to the design of the TemBreak 2 switching mechanism.

This proactive development policy confirms our reputation as Innovators in Protection Technology.

Machine Safety

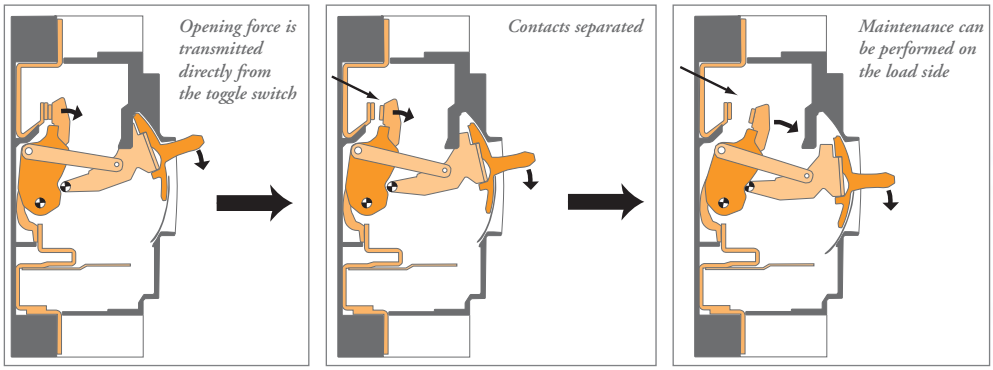

TemBreak 2 MCCBs are marked with IEC symbol indicating Direct Opening Action. ⊖

The robust mechanism ensures that the force you apply to the toggle is transmitted directly to the contacts.

Under the heading "Measures to minimise risk in the event of failure", IEC 60204-1 Safety of Machinery - Electrical Equipment of Machines includes the following recommendation:

" - the use of switching devices having positive (or direct) opening operation."

TemBreak 2 MCCBs help you to comply with the world's most stringent safety standards. It is one of the safest switching devices for machinery.

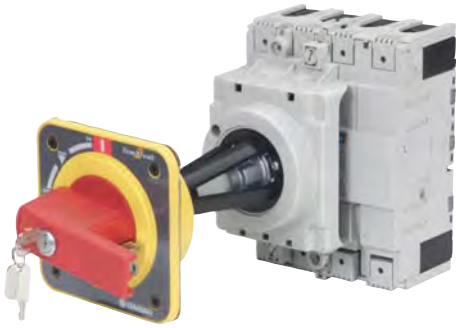

WELCOME TO TEMBREAK 2

SAFETY PLUS

Visual Safety

You can easily see if a breaker is open, closed or tripped. **SAFETY+** coloured indicators boldly display the ON or OFF status. The indicators are fully covered if a breaker trips, and black is the only visible colour.

This is a ***unique*** safety feature. You can identify faulty circuits at a glance.

The toggle position always matches the position of the main contacts.

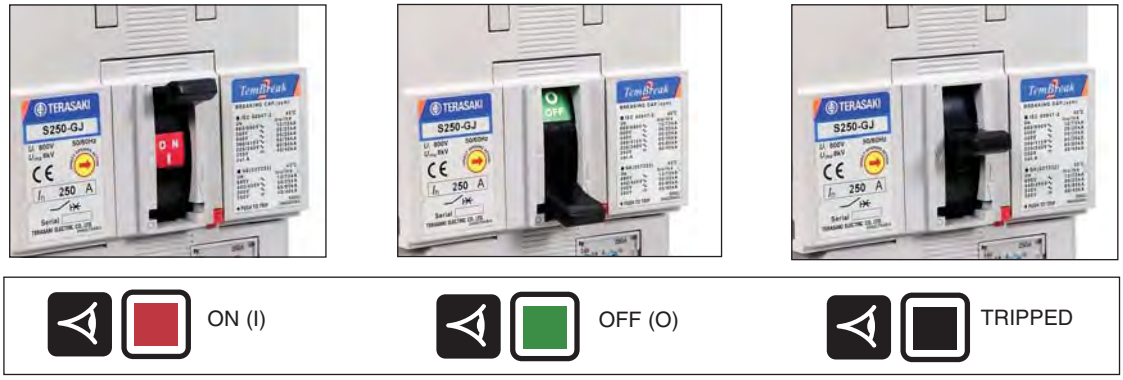

Touch Safety

The risk of touching live parts has been minimised by design.
These features reduce the risk of touching live parts:

- There are no exposed metal screws on the front face
- No live parts are exposed when fitting accessories
- Double Insulation

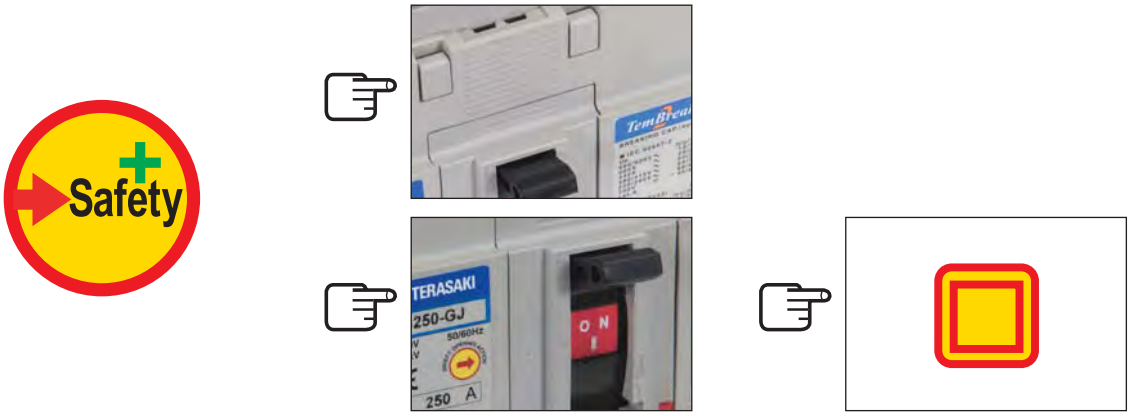

WELCOME TO TEMBREAK 2

EXCEEDING STANDARDS

Safety Plus

TemBreak 2 MCCBs exceed the requirements of recognised standards.

International Compliance

- The TemBreak 2 MCCB complies with the international standard IEC 60947-2
- TemBreak 2 Switch Disconnectors comply with IEC 60947-3
- Accessories comply with IEC 60947-5-1 or IEC 61058-1
- The entire range conforms to the IEC general rules for switchgear, IEC 60947-1
- TemBreak 2 MCCBs comply with JIS C 8201-2-1 Ann.1
- The TemBreak 2 range complies with the EC Low Voltage Directive and all models are CE marked
- TemBreak 2 MCCBs carry the IEC symbol indicating Direct Opening Action as defined by IEC 60947-5-1. IEC 60204-1, Safety of Machinery - Electrical Equipment of Machines recommends that switches used for machinery have Direct Opening Action to minimise risk in the event of failure

Independent Tests

TemBreak 2 circuit breakers have been tested at independent laboratories as well as in Terasaki's own laboratory in Osaka, Japan. Copies of independent test reports are available on request.

Marine Approvals

TemBreak 2 MCCBs are approved by the leading marine approval organisations.

Visit www.terasaki.com for current marine approvals and performance ratings.

WELCOME TO TEMBREAK 2

REDUCING ENVIRONMENTAL IMPACT

Longer Life Cycle

It makes good environmental sense to install a product with a long life expectancy. If you install a TemBreak 2 MCCB, you can expect it to stay in service for at least 30,000 mechanical operations (250A Frame). This is 22,000 more operations than recommended by IEC 60947-2, the international standard for circuit breakers.

If a system must be upgraded in future, we have made the following provisions for recycling:

1

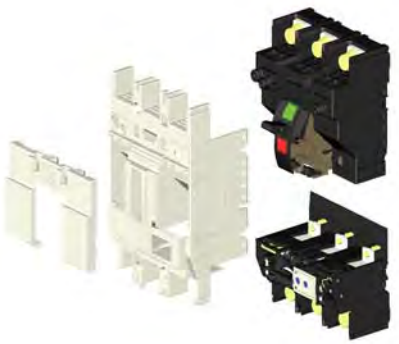

1. The modular design of TemBreak 2 allows component parts and accessories to be easily disassembled and separately disposed of. Moulded parts do not contain any embedded metal parts.
2. Materials are clearly marked to allow future identification for easy recycling.

2

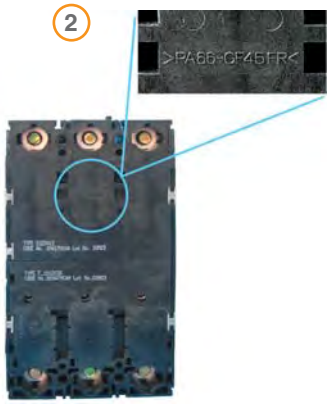

Uses Eco-friendly Materials

The following materials are used in most TemBreak 2 circuit breakers:

- Thermoplastic resin not containing PBBs or PBDEs
- Lead-free solder
- Cadmium-free contacts
- Rohs compliant materials

Lighter and Smaller

Components with low weight and volume make life easy for users, but high performance from smaller products also means less material used and less waste produced.

ISO 14001

Terasaki operate an Environmental Management System accredited to ISO 14001:1999. This requires us to monitor and measure the environmental performance of our activities, products and services in order to continually improve such performance.

Further information about this standard can be found on the internet at: www.tc207.org

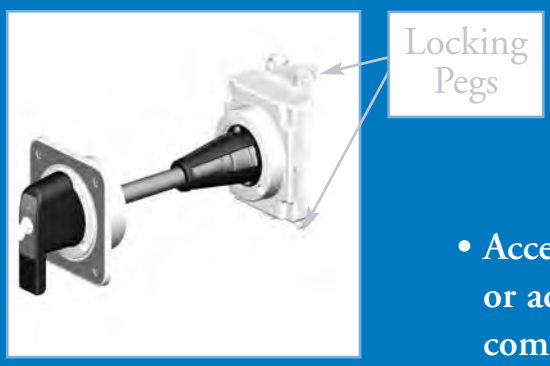

- Accessories can be fitted by the switchboard builder or added by the end-user. All internal accessories are common for TemBreak 2 MCCBs.
- Handles and motor operators can be rapidly fitted using the locking pegs. It takes **less than 10 seconds to secure a handle or motor** to the MCCB – a great time saving compared to alternative products.
- All accessories are endurance tested to the same level as the host MCCB.

RATINGS AND SPECIFICATIONS

TEMBREAK 2

MOULDED CASE CIRCUIT BREAKERS

16A TO 630A

1. Welcome to TemBreak 2

2. Ratings and Specifications

- **MCCBs** 15
- **Switch-Disconnectors** 19

3. Operating Characteristics

4. Application Data

5. Accessories

6. Installation

7. Dimensions

MCCB ELECTRICAL CHARACTERISTICS TO IEC 60947-2, EN 60947-2, JIS C 8201-2-1 ANN.1, AS/NZS 3947-2, NEMA AB-1

Frame	Quantity	Unit	Condition	125	
Model				E125	S125
Number of Poles				3, 4	1
Type				NJ	NF
Nominal current ratings					
	I_n	(A)	50°C	20,32,50, 63,100,125	16,20,25, 32,40,50, 63, 80, 100,125
Electrical characteristics					
Rated operational voltage	U_e	(V)	AC 50/60 Hz	500	240
			DC	500	-
Rated insulation voltage	U_i	(V)		800	800
Rated impulse withstand voltage	U_{imp}	(kV)		8	8
Ultimate breaking capacity (IEC, JIS, AS/NZS)	I_{cu}	(kA)	690V AC	-	-
			525V AC	8	-
			440V AC	15	-
			400/415V AC	25	-
			220/240V AC	35	25
			250V DC	25	-
Service breaking capacity (IEC, JIS, AS/NZS)	I_{cs}	(kA)	690V AC	-	-
			525V AC	6	-
			440V AC	12	-
			400/415V AC	19	-
			220/240V AC	27	13
			250V DC	19	-
Rated breaking capacity (NEMA)		(kA)	480V AC	8	-
			240VAC	35	25
Protection					
Adjustable thermal, adjustable magnetic				■	
Fixed thermal, fixed magnetic					■
Microprocessor					
Utilisation category				A	A
Installation					
Front connection (FC)				■	■
Attached flat bar (FB)				●	●
Solderless terminal (cable clamp) (FW)				●	●
Rear connection (RC)				●	-
Plug-in (PM)				●	-
Draw- out (DR)				-	-
DIN rail mounting (DA)				●	●
Dimensions	h	(mm)		155	155
	w	(mm)	3 pole, (1 pole)	90	(30)
			4 pole	120	
	d	(mm)		68	68
Weight	W	(kg)	3 pole, (1 pole)	1.1	(0.45)
			4 pole	1.4	
Operation					
Direct Opening Action				■	■
Toggle operation				■	■
Variable depth / direct mount operating handle (HB/HP)				●	-
Motor operator (MC)				●	-
Endurance	Electrical	cycles	440V AC		
	Mechanical	cycles			

■ Standard ● Optional - Not Available

RATINGS AND SPECIFICATIONS

					160				
	S125	S125	H125	L125	S160	S160	S160	H160	L160
	3, 4 NJ	3,4 GJ	3, 4 NJ	3, 4 NJ	1 NF	3, 4 NJ	3, 4 GJ	3, 4 NJ	3, 4 NJ
	20,32,50, 63,100,125	20,32,50, 63,100,125	20,32,50, 63,100,125	20,32,50, 63,100,125	16,20,25,32, 40,50,63,80, 100,125,160	20,32,50,63, 100,125,160	50,63,100, 125,160	160	160
	690 600 800 8	690 600 800 8	690 600 800 8	690 600 800 8	415 125 800 8	690 600 800 8	690 600 800 8	690 600 800 8	690 600 800 8
	6 22 25 36 50 25	6 25 50 65 85 40	20 45 120 125 150 40	25 65 180 200 200 40	- - - - 25 -	7.5 (5*) 25 (18*) 25 (18*) 36 (30*) 65 (42*) 40 (30*)	7.5 25 50 65 85 40	20 45 120 125 150 40	25 65 180 200 200 40
	6 22 25 36/30 50 19	6 22 25 36/33 85 40	15 45 80 85 150 40	20 65 135 150 150 40	- - - - 19 -	7.5 (5*) 25 (18*) 25 (18*) 36 (25*) 65 (35*) 40 (25*)	7.5 25 25 36 85 40	15 45 80 85 150 40	20 65 135 150 150 40
	22 50	25 85	45 150	65 200	- 25	22 (18*) 65 (42*)	25 85	45 150	65 200
	■ A	■ A	■ A	■ A	■ A	■ A	■ A	■ A	■ A
	■ ● ● ● ● - ● 155 90 120 68 1.1 1.4	■ ● ● ● ● - ● 155 90 120 68 1.1 1.4	■ ● ● ● ● - - 165 105 140 103 2.4 3.2	■ ● ● ● ● - - 165 105 140 103 2.4 3.2	■ ● ● - - - - 165 (35) - 68 (0.5)	■ ● ● ● ● - - 165 105 140 68 1.5 1.9	■ ● ● ● ● - - 165 105 140 68 1.5 1.9	■ ● ● ● ● - - 165 105 140 103 2.5 3.3	■ ● ● ● ● - - 165 105 140 103 2.5 3.3
	■ ■ ● ●	■ ■ ● ●	■ ■ ● ●	■ ■ ● ●	■ ■ - -	■ ■ ● ●	■ ■ ● ●	■ ■ ● ●	■ ■ ● ●
	30,000 30,000				20,000			20,000 30,000	

*Applies only to 20A and 32A models

MCCB ELECTRICAL CHARACTERISTICS TO IEC 60947-2, EN 60947-2, JIS C 8201-2-1 ANN.1, AS/NZS 3947-2, NEMA AB-1

Frame	Quantity	Unit	Condition	250		
Model				E250	S250	S250
Number of Poles				3, 4	3, 4	3, 4
Type				NJ	NJ	GJ
Nominal current ratings						
	I_n	(A)	50°C	20,32,50,63 100,125,160, 200,250	160,200, 250	160,200, 250
Electrical characteristics						
Rated operational voltage	U_e	(V)	AC 50/60 Hz	500	690	690
			DC	500	600	600
Rated insulation voltage	U_i	(V)		800	800	800
Rated impulse withstand voltage	U_{imp}	(kV)		8	8	8
Ultimate breaking capacity (IEC, JIS, AS/NZS)	I_{cu}	(kA)	690V AC	-	7.5	7.5
			525V AC	10	25	25
			440V AC	15	25	50
			400/415V AC	25	36	65
			220/240V AC	35	65	85
			250V DC	25	40	40
Service breaking capacity (IEC, JIS, AS/NZS)	I_{cs}	(kA)	690V AC	-	7.5	7.5
			525V AC	7.5	25	25
			440V AC	12	25	25
			400/415V AC	19	36	36
			220/240V AC	27	65	85
			250V DC	19	40	40
Rated breaking capacity (NEMA)		(kA)	480V AC	10	22	25
			240VAC	35	65	85
Rated short-time withstand current	I_{cw}	(kA)	0.3 Seconds	-	-	-
Protection						
Adjustable thermal, adjustable magnetic				■	■	■
Fixed thermal, fixed magnetic						
Microprocessor						
Utilisation category				A	A	A
Installation						
Front connection (FC)				■	■	■
Attached flat bar (FB)				●	●	●
Solderless terminal (cable clamp) (FW)				●	●	●
Rear connection (RC)				●	●	●
Plug-in (PM)				●	●	●
Draw- out (DR)				-	-	-
DIN rail mounting (DA)				-	-	-
Dimensions	h	(mm)		165	165	165
	w	(mm)	3 pole	105	105	105
		(mm)	4 pole	140	140	140
	d	(mm)		68	68	68
Weight	W	(kg)	3 pole	1.5	1.5	1.5
			4 pole	1.9	1.9	1.9
Operation						
Direct Opening Action				■	■	■
Toggle operation				■	■	■
Variable depth / direct mount operating handle (HB/HP)				●	●	●
Motor operator (MC)						
Endurance	Electrical	cycles	415V AC			
	Mechanical	cycles				

■ Standard ● Optional - Not Available

RATINGS AND SPECIFICATIONS

					400										630			
	S250	H250	H250	L250	E400	S400	S400	S400	S400	S400	H400	H400	L400	L400	E630	S630	S630	>630
	3, 4 PE	3, 4 NJ	3, 4 NE	3, 4 NJ	3, 4 NJ	3, 4 CJ	3, 4 NJ	3,4 NE	3, 4 GJ	3, 4 GE	3, 4 NJ	3, 4 NE	3, 4 NJ	3, 4 NE	3,4 NE	3, 4 CE	3, 4 GE	
	250, 125	160, 250	250, 125	160, 250	250, 400	250, 400	250, 400	250, 400	250, 400	250, 400	250, 400	250, 400	250, 400	250, 400	630	630	630	
	690 - 800 8	690 600 800 8	690 - 800 8	690 600 800 8	500 500 800 8	690 600 800 8	690 600 800 8	690 - 800 8	690 600 800 8	690 - 800 8	690 600 800 8	690 - 800 8	690 600 800 8	690 - 800 8	690* - 800 8	690* - 800 8	690* - 800 8	
	20 35 50 70 125 -	20 45 120 125 150 40	20 45 120 125 150 -	25 65 180 200 200 40	- 15 22 25 35 25	15 22 30 36 50 40	20 30 45 50 85 40	20 30 45 50 85 -	20 30 65 70 100 40	20 30 65 70 100 -	35 45 120 125 150 40	35 45 120 125 150 -	50 65 180 200 200 40	50 65 180 200 200 -	10* 15 25 36 50 -	20* 30 45 50 85 -	20* 30 65 70 100 -	
	15 35 50 70 125 -	15 45 80 85 150 40	15 45 80 85 150 -	20 65 135 150 150 40	- 15 22 25 35 19	15 22 30 36 50 40	15 30 45 50 85 40	15 30 45 50 85 -	15 30 50 50 85 40	15 30 50 50 85 -	35 45 80 85 150 40	35 45 80 85 150 -	50 65 135 150 150 40	50 65 135 150 150 -	10* 15 25 36 50 -	15* 30 45 50 85 -	15* 30 50 50 85 -	
	35 125	45 150	45 150	65 200	15 35	22 50	25 85	25 85	30 100	30 100	45 150	45 150	65 200	65 200	15 50	25 85	30 100	
	-	-	-	-	-	-	-	5	-	5	-	5	-	5	-	-	-	
	■ A	■ A	■ A	■ A	■ A	■ A	■ A	■ B	■ A	■ B	■ A	■ B	■ A	■ B	■ A	■ A	■ A	
	■ ● ● ● ● - - 165 105 140 103 2.5 3.3	■ ● ● ● † - - 165 105 140 103 2.4 3.2	■ ● ● ● † - - 165 105 140 103 2.5 3.3	■ ● ● ● † - - 165 105 140 103 2.4 3.2	■ ● ● ● ● ● - 260 140 185 103 4.2 5.6	■ ● ● ● ● ● - 260 140 185 103 4.2 5.6	■ ● ● ● ● ● - 260 140 185 103 4.2 5.6	■ ● ● ● ● ● - 260 140 185 103 4.3 5.7	■ ● ● ● ● ● - 260 140 185 103 4.2 5.6	■ ● ● ● ● ● - 260 140 185 103 4.3 5.7	■ ● ● ● ● ● - 260 140 185 140 7.0 9.3	■ ● ● ● ● ● - 260 140 185 140 7.1 9.4	■ ● ● ● ● ● - 260 140 185 140 7.0 9.3	■ ● ● ● ● ● - 260 140 185 140 7.1 9.4	■ ● ● ● - ● ‡ - - 260 140 185 103 5.0 6.5	■ ● ● ● - ● ‡ - - 260 140 185 103 5.0 6.5	■ ● ● ● - ● ‡ - - 260 140 185 103 5.0 6.5	
	■ ■ ●	■ ■ ●	■ ■ ●	■ ■ ●	■ ■ ●	■ ■ ●	■ ■ ●	■ ■ ●	■ ■ ●	■ ■ ●	■ ■ ●	■ ■ ●	■ ■ ●	■ ■ ●	■ ■ ●	■ ■ ●	■ ■ ●	
	10,000 30,000				4,500 15,000										4,500 15,000			

TURN TO PAGE 143, SECTION 9, FOR RATINGS AND SPECIFICATIONS OF MCCBs FROM 630A TO 1600A

*MCCB cannot be used in IT systems at this voltage.
† Refer to Temperature Ratings, Section 6.
‡ Contact NHP for details.

SWITCH-DISCONNECTOR ELECTRICAL CHARACTERISTICS TO IEC 60947-3, EN 60947-3, AS/NZS 3947-3

Frame	Quantity	Unit	Condition	125	160	250
Model				S125	S160	S250
Number of Poles				3,4	3,4	3,4
Type				NN	NN	NN
Nominal current ratings						
	I_e	(A)		125	160	250
Electrical characteristics						
Rated operational voltage	U_e	(V)	AC 50/60 Hz	690	690	690
			DC	600	600	600
Rated insulation voltage	U_i	(V)		800	800	800
Rated impulse withstand voltage	U_{imp}	(kV)		8	8	8
Rated short -circuit making capacity	I_{cm}	(kA peak)		3.6	6	6
Rated short-time withstand current	I_{cw}	(kA rms)	0.3 Seconds	2	3	3
Utilisation category to IEC 60947-3			AC	AC-23A	AC-23A	AC-23A
			DC	DC-22A	DC-22A	DC-22A
Installation						
Front connection (FC)				■	■	■
Attached flat bar (FB)				●	●	●
Solderless terminal				●	●	●
Rear connection (RC)				●	●	●
Plug-in (PM)				●	●	●
Draw- out (DR)				-	-	-
DIN rail mounting (DA)				●	-	-
Dimensions	h	(mm)		155	165	165
	w	(mm)	3 pole	90	105	105
			4 pole	120	140	140
	d	(mm)		68	68	68
Weight	W	(kg)	3 pole	1.1	1.5	1.5
			4 pole	1.4	1.9	1.9
Operation						
Direct Opening Action				■	■	■
Toggle operation				■	■	■
Variable depth / direct mount operating handle (HB/HP)				●	●	●
Motor operator (MC)				●	●	●
Endurance	Electrical	cycles	415V AC	30,000	20,000	10,000
	Mechanical	cycles		30,000	30,000	30,000

■ Standard ● Optional - Not Available

RATINGS AND SPECIFICATIONS

	400	630
	S400	S630
	3,4 NN	3,4 NN
	400	630
	690 600 800 8	690 600 800 8
	9 5 AC-23A DC-22A	9 5 AC-23A DC-22A
	■ ● ● ● ● - - 260 140 185 103 4.2 5.6	■ ● ● ● ‡ - - 260 140 185 103 4.4 5.8
	■ ■ ● ●	■ ■ ● ●
	4,500 15,000	4,500 15,000

‡ Contact us for details.

SAFETY LOCK FOR PLUG-IN VERSIONS

Plug-in MCCB and base

Plug-in connection kit, including safety lock

The plug-in MCCB is locked to the base when the toggle is ON. It cannot be removed unless the toggle is OFF or TRIPPED.
The safety lock prevents a trip occurring as the MCCB is being removed from the base.

OPERATING CHARACTERISTICS

TEMBREAK 2

MOULDED CASE CIRCUIT BREAKERS 16A TO 630A

1. Welcome to TemBreak 2
2. Ratings and Specifications
3. **Operating Characteristics**
   - Thermal Magnetic Protection 23
   - Thermal Magnetic Time / Current Characteristics 25
   - Electronic Protection 29
   - Electronic Time / Current Characteristics 32
   - Let-through Peak Current Characteristics 35
   - Let-through Energy Characteristics 39
4. Application Data
5. Accessories
6. Installation
7. Dimensions

SECTION 3

OPERATING CHARACTERISTICS

THERMAL MAGNETIC PROTECTION

TemBreak 2 MCCBs from 125A frame to 400A frame are available with thermal magnetic protection units.

All 3 pole and 4 pole models have **adjustable thermal and adjustable magnetic** characteristics.

3 Pole MCCB with Adjustable Thermal and Adjustable Magnetic Characteristics

Single Pole MCCB with Fixed Characteristics

An adjustable magnetic characteristic allows short-circuit protection to be matched to the load and supply characteristics, for example motor inrush current or generator short-circuit current.

Lowering the short-circuit tripping threshold can allow a higher earth-loop impedance in an installation and provide end-of-cable protection with correct disconnection times.

Single pole MCCBs have fixed thermal and fixed magnetic characteristics.

MCCBs feeding motor circuits are often required to provide only short circuit protection, with overload protection provided by a separate thermal or electronic overload relay. TemBreak 2 MCCBs without thermal protection elements, but including magnetic protection elements are available for this application.

Thermal magnetic protection units are especially suited to the following applications:

- Installations where harmonic distortion of current waveforms is likely. They inherently act on the r.m.s heating effect of current.

- DC circuits. They provide both DC overload and DC short-circuit protection. Magnetic trip currents, (I_i), quoted in this catalogue are expressed in AC r.m.s. Amperes. The instantaneous magnitudes of current required to operate the magnetic elements are higher than the AC r.m.s. values by a factor of $\sqrt{2}$. When protecting DC circuits, it is therefore recommended that the I_i setting is reduced accordingly.

OPERATING CHARACTERISTICS

THERMAL MAGNETIC PROTECTION

Adjustment Dials

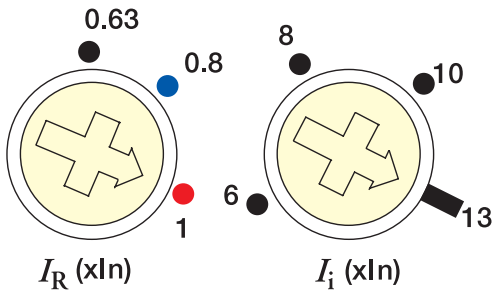

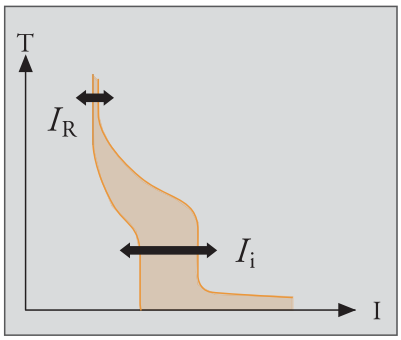

1. I_R is the thermal element adjustment dial and is used to set the rated current to match the conductor rating.

   I_R can be set between 0.63 and 1.0 times I_n.

2. I_i is the magnetic element adjustment dial and is used to set the short circuit tripping threshold to suit the application.

   I_i can be set between 6 and 12 times I_n on 125A and 400A frame models.

   I_i can be set between 6 and 13 times I_n on 250A frame models with ratings of 160A, 200A and 250A.

   I_i can be set between 6 and 12 times I_n on 250A frame models with ratings of 125A and less.

Models, Types and Rated Currents of Thermal Elements

Model	Type	Current Rating In (A)
S125	-NF	16, 20, 25, 32, 40, 50, 63, 80, 100, 125
E125	-NJ	20, 32, 50, 63, 100, 125
S125	-NJ	20, 32, 50, 63, 100, 125
S125	-GJ	20, 32, 50, 63, 100, 125
H125	-NJ	20, 32, 50, 63, 100, 125
L125	-NJ	20, 32, 50, 63, 100, 125
S160	-NF	16, 20, 25, 32, 40, 50, 63, 80, 100, 125, 160
S160	-NJ	20, 32, 50, 63, 100, 125, 160
S160	-GJ	50, 63, 100, 125, 160
H160	-NJ	160
L160	-NJ	160
E250	-NJ	20, 32, 50, 63, 100, 125, 160, 200, 250
S250	-NJ	160, 200, 250
S250	-GJ	160, 200, 250
H250	-NJ	160, 250
L250	-NJ	160, 250
E400	-NJ	250, 400
S400	-CJ	250, 400
S400	-NJ	250, 400
S400	-GJ	250, 400
H400	-NJ	250, 400
L400	-NJ	250, 400

OPERATING CHARACTERISTICS

THERMAL MAGNETIC CHARACTERISTICS

Single Pole MCCBs

SECTION 3

Time/current characteristic curves

S125-NF

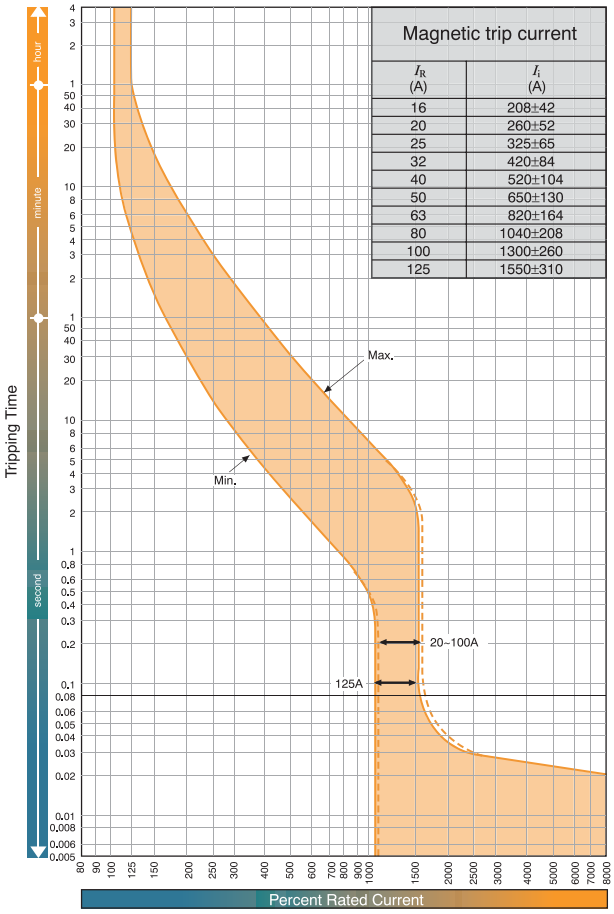

Magnetic trip current	
I_R (A)	I_i (A)
16	208±42
20	260±52
25	325±65
32	420±84
40	520±104
50	650±130
63	820±164
80	1040±208
100	1300±260
125	1550±310

Time/current characteristic curves

S160-NF

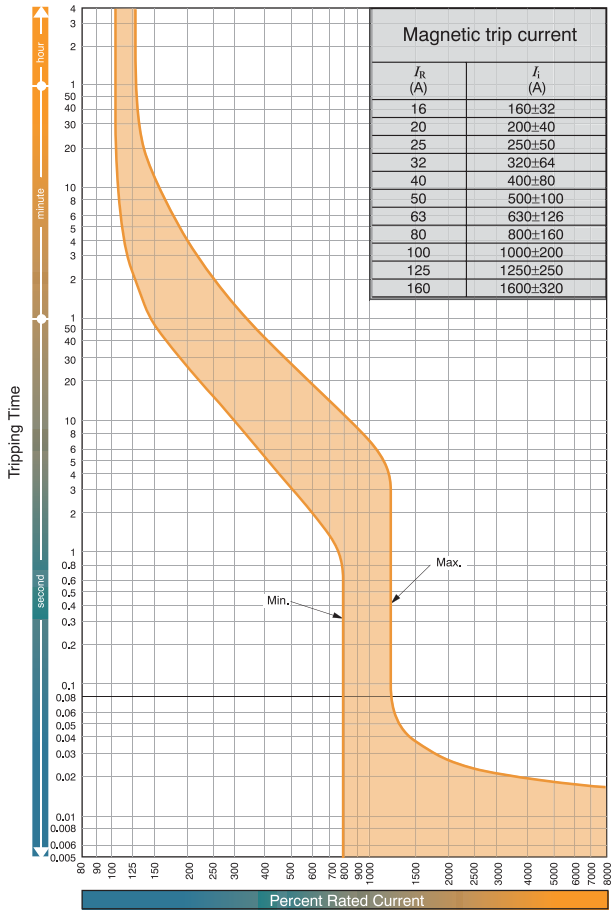

Magnetic trip current	
I_R (A)	I_i (A)
16	160±32
20	200±40
25	250±50
32	320±64
40	400±80
50	500±100
63	630±126
80	800±160
100	1000±200
125	1250±250
160	1600±320

OPERATING CHARACTERISTICS

THERMAL MAGNETIC CHARACTERISTICS

125A Frame MCCBs

Time/current characteristic curves

E125-NJ, S125-NJ, S125-GJ

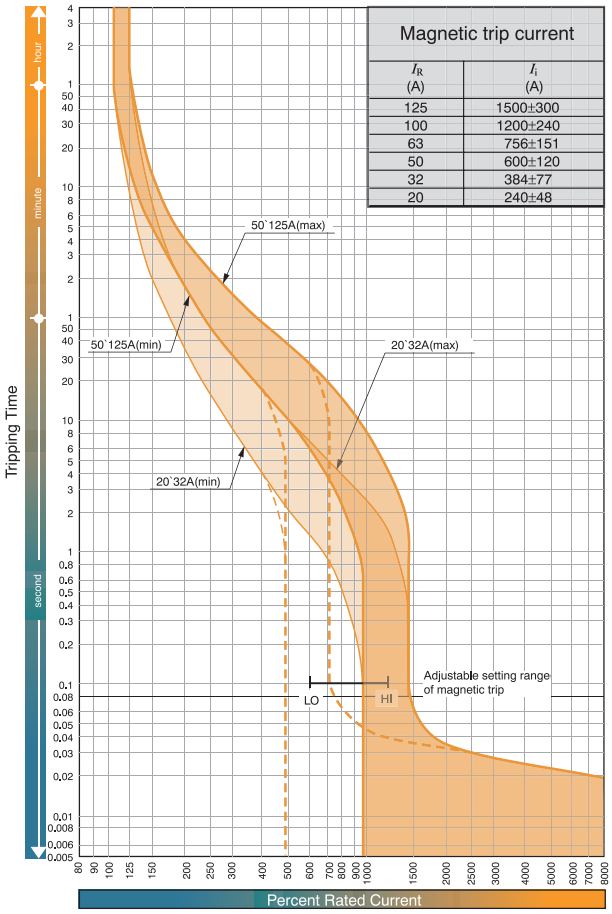

Time/current characteristic curves

H125-NJ, L125-NJ

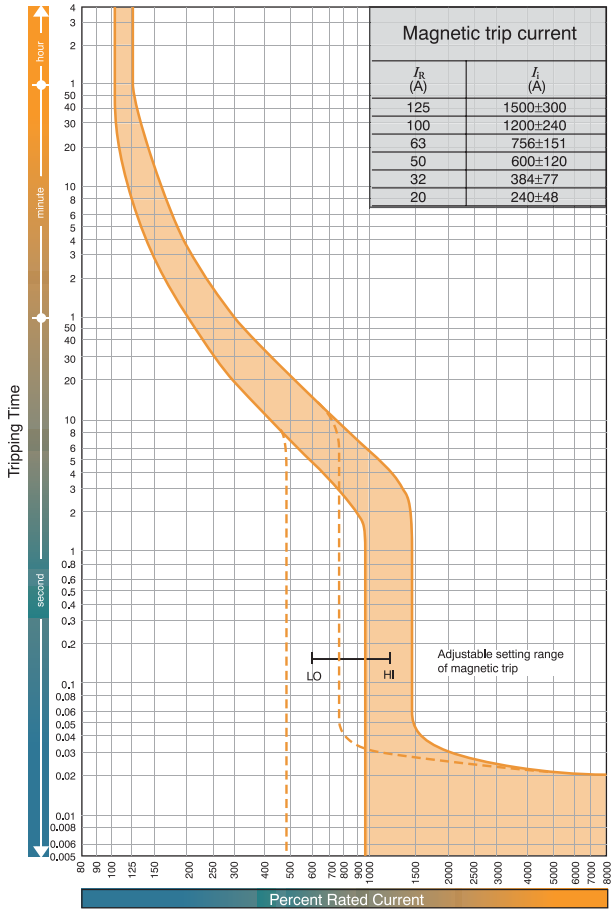

SECTION 3

OPERATING CHARACTERISTICS

THERMAL MAGNETIC CHARACTERISTICS

160A and 250A Frames

SECTION 3

Time/current characteristic curves

S160-NJ, S160-GJ, E250-NJ, S250-NJ, S250-GJ

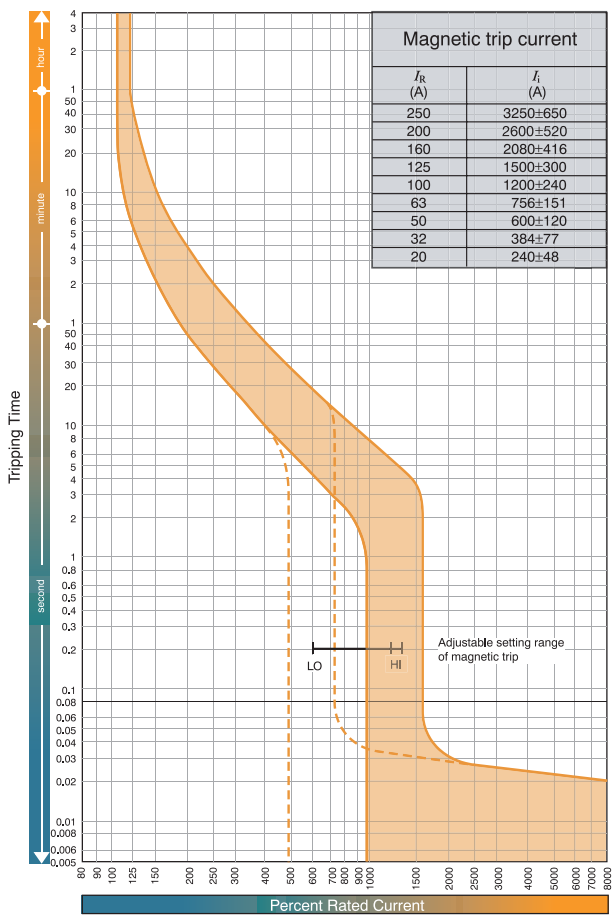

Time/current characteristic curves

H160-NJ, H250-NJ, L160-NJ, L250-NJ

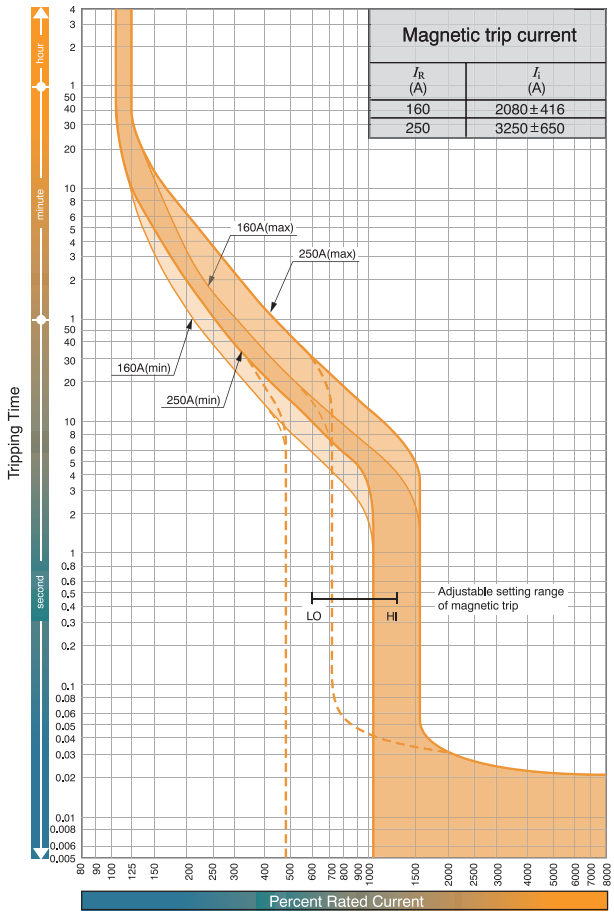

OPERATING CHARACTERISTICS

THERMAL MAGNETIC CHARACTERISTICS

400A Frame

Time/current characteristic curves

E400-NJ, S400-CJ, S400-NJ, S400-GJ

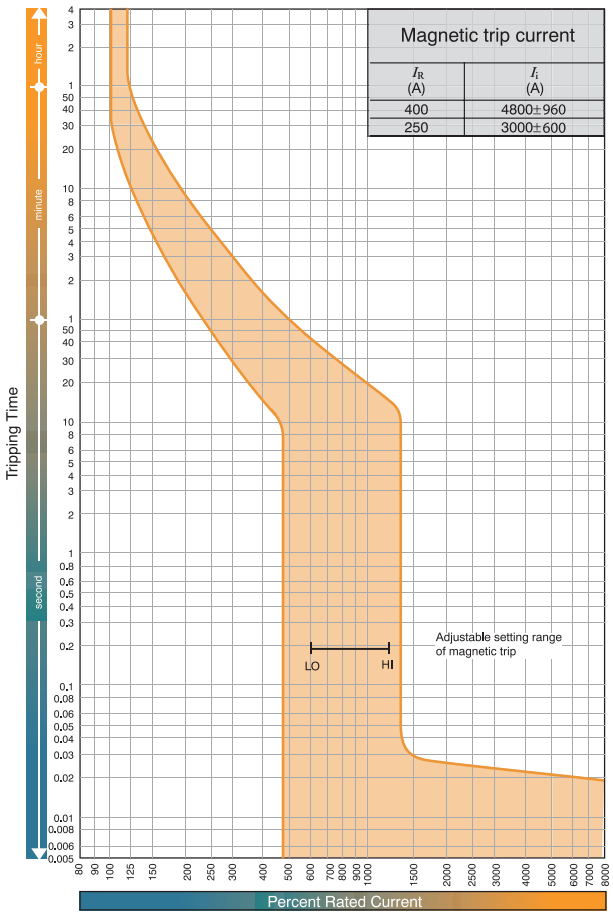

Time/current characteristic curves

H400-NJ, L400-NJ

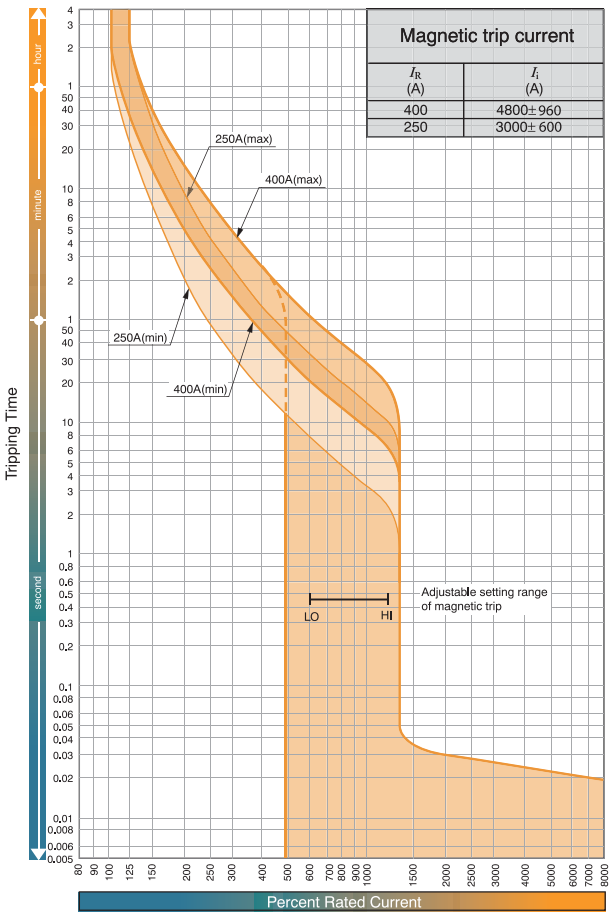

SECTION 3

OPERATING CHARACTERISTICS

ELECTRONIC PROTECTION

TemBreak 2 MCCBs from 250A frame to 630A frame are available with electronic protection units. Current ratings, I_n, of 40A, 125A, 160A, 250A, 400A and 630A are available. These offer great flexibility as their characteristics can be set to suit a wide range of application conditions. Overload protection can be set between 0.4 and 1.0 times I_n.

Terasaki offer one of the most adaptable protection units on the market:

If you require a characteristic which is not available as a preset on our standard electronic protection unit, send us the details and we will program a customised characteristic to your specification.*

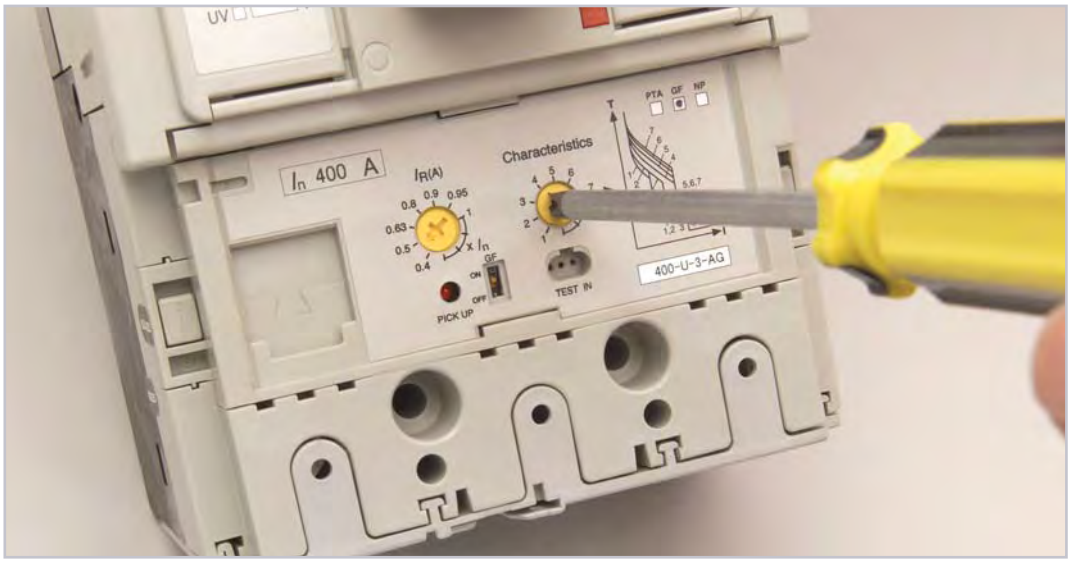

Selecting a Preset Characteristic for a 400A TemBreak 2 MCCB with Electronic Protection

Every TemBreak 2 electronic protection unit includes overload protection (L), delayed short-circuit protection (S) and instantaneous protection (I) as standard.

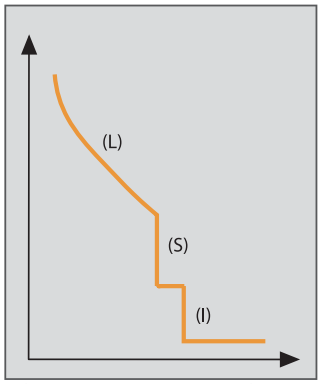

Electronic Protection Characteristic

*Characteristic is programmable within certain limits. Contact us for details.

OPERATING CHARACTERISTICS

ELECTRONIC PROTECTION

Optional Functions

Three optional functions are available:

Ground Fault Trip (G)

This function trips the MCCB after time delay, t_g, if the ground fault current exceeds the preset threshold, I_g. Ground fault protection can be enabled and disabled by operating a DIP switch on the electronic protection unit. An external current transformer is available if the ground fault trip function is required on a 3 pole MCCB.

Neutral Protection (N)

Neutral protection trips the MCCB after time delay, t_N, if current in the neutral conductor exceeds the rated current, I_n, of the MCCB. The time delay characteristic is identical to that of the overload characteristic (L).

Preferential Trip Alarm (P)

An LED and volt-free output contact are activated after a time delay, t_p, if the load current exceeds the preset threshold, I_p.

How to Specify Optional Functions

Optional functions must be specified at the time of order. Descriptions for electronic MCCBs include a 1-4 digit alphabetic code after the type designation which details the combination of optional functions. For example:

S400-GE **APG** 3P 400A FC - includes preferential trip and ground fault trip.

The table below lists codes for all the optional functions currently available:

			Optional Function		
In	Poles	Code	Ground Fault (G)	Neutral Protection (N)	Preferential Trip Alarm (P)
250	3	AP	-	-	■
	4	AP	-	-	■
		AN	-	■	-
		APN	-	■	■
400	3	AP	-	-	■
		AG	■	-	-
		APG	■	-	■
	4	AP	-	-	■
		AN	-	■	-
		APN	-	■	■
		AGN	■	■	-
		APGN	■	■	■
630	3	AP	-	-	■
		AG	■	-	-
		APG	■	-	■
	4	AP	-	-	■
		AN	-	■	-
		APN	-	■	■
		AGN	■	■	-
		APGN	■	■	■

■ Available - Not Available

OPERATING CHARACTERISTICS

ELECTRONIC PROTECTION

Adjustment Dials

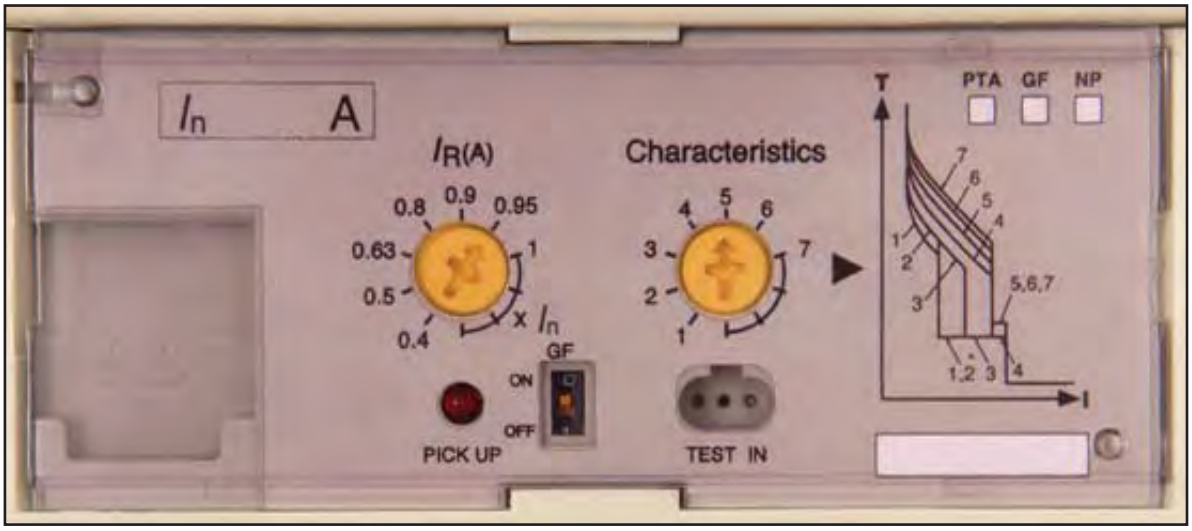

The left adjustment dial sets the rated current to match the conductor rating. The right adjustment dials select one of six on 630A models preset characteristics. The effects of the left adjustment dial (labelled I_R(A)), and the right adjustment dial (labelled Characteristics) are detailed in the tables shown underneath each time/current graph.

Tolerances of Characteristics

Characteristics		Tolerance
Long Time Delay	t_R	+/- 20%
Short Time Delay	I_{sd}	+/- 15%
	t_{sd}	Total clearing time +50ms, resettable time -20ms
Instantaneous	I_i	+/- 20%
Preferential trip Alarm	I_p	+/- 10%
	t_p	+/- 10%
Ground Fault Trip	I_g	+/- 15%
	t_g	Total clearing time +50ms, resettable time -20ms
Neutral Protection	I_N	+/- 15%

OPERATING CHARACTERISTICS

ELECTRONIC CHARACTERISTICS

S250-PE, H250-NE

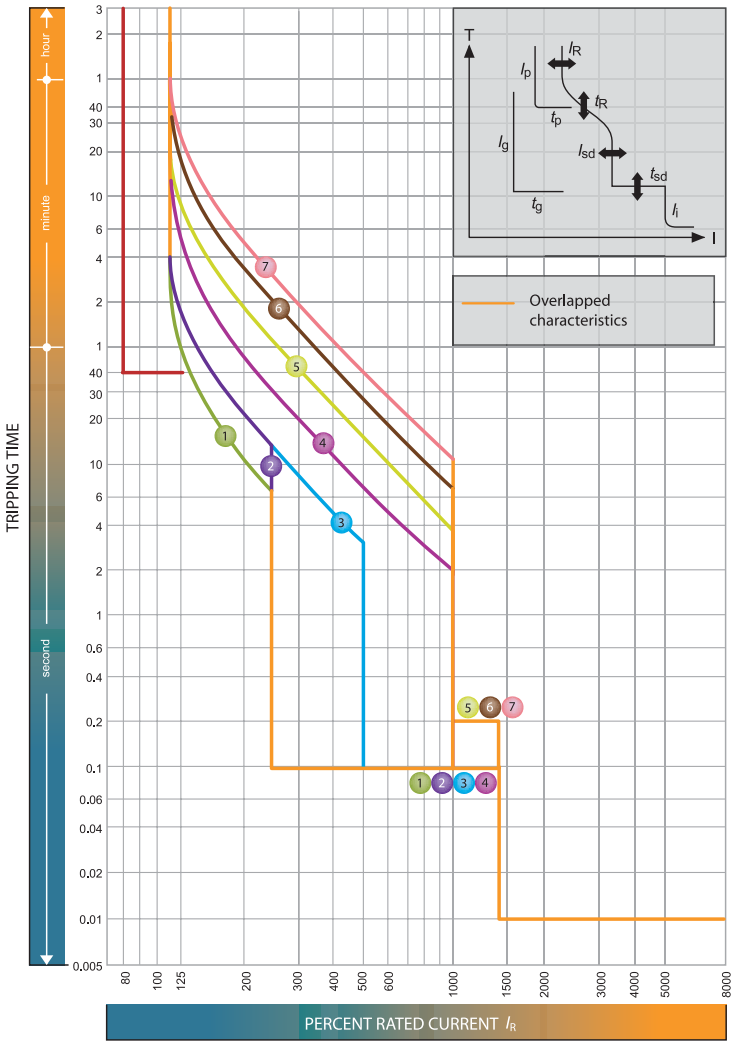

In = 250A; 160A; 125A; 40A

	I_R (A)									
	LTD Pick-up current	I_R	xI_n	0.4	0.5	0.63	0.8	0.9	0.95	1.0

	Characteristics		No.	1	2	3	4	5	6	7
Standard	LTD	t_R	(s)	11	21	21	5	10	19	29
				at 200% x I_R			at 600% x I_R			
	STD	I_{sd}	xI_R	2.5		5	10			
		t_{sd}	(s)	0.1				0.2		
	INST	I_i	xI_R	14(Max: 13 x I_n) Note (1)						
Option	PTA	I_p	xI_R	0.8						
		t_p	(s)	40						
	N	I_N	xI_n	1.0						
		t_N	(s)	t_N=t_R Note(2)						

Note
(1) I_i max. = 13 x I_n. (2) Standard setting of I_N is 100% of I_n. For any other setting please specify when ordering.

SECTION 3

SECTION 3

OPERATING CHARACTERISTICS

ELECTRONIC CHARACTERISTICS

S400-NE, S400-GE, H400-NE, L400-NE

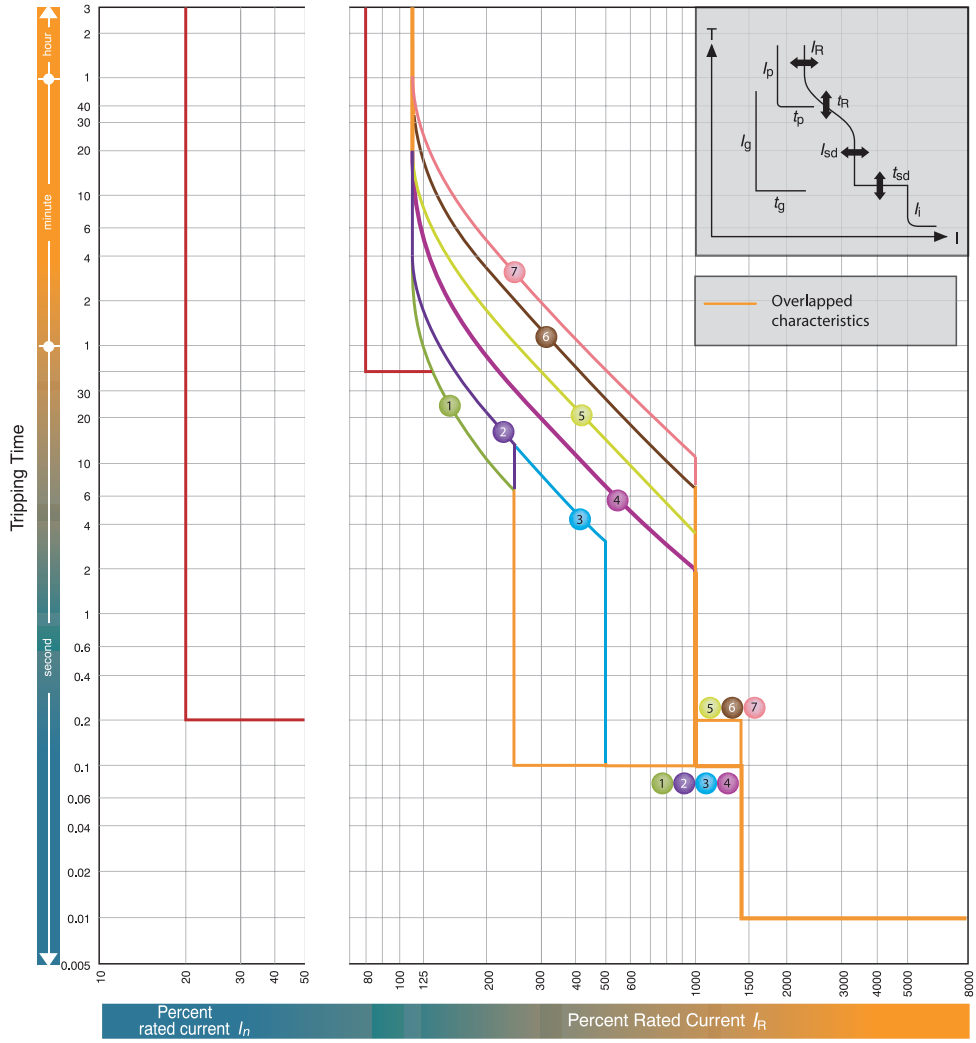

In = 400A; 250A

I_R (A)										
LTD Pick-up current	I_R	xI_n	0.4	0.5	0.63	0.8	0.9	0.95	1.0

	Characteristics		No.	1	2	3	4	5	6	7
Standard	LTD	t_R	(s)	11	21	21	5	10	19	29
				at 200% x I_R			at 600% x I_R			
	STD	I_{sd}	xI_R	2.5		5	10			
		t_{sd}	(s)	0.1				0.2		
	INST	I_i	xI_R	14(Max: 13 x I_n) Note (1)						
Option	PTA	I_p	xI_R	0.8						
		t_p	(s)	40						
	GFT	I_g	xI_n	0.2						
		t_g	(s)	0.2						
	N	I_N	xI_n	1.0						
		t_N	(s)	t_N=t_R Note(2)						

Note
(1) I_i max. = 13 x I_n. (2) Standard setting of I_N is 100% of I_n. For any other setting please specify when ordering.

OPERATING CHARACTERISTICS

ELECTRONIC CHARACTERISTICS

E630-NE, S630-CE, S630-GE

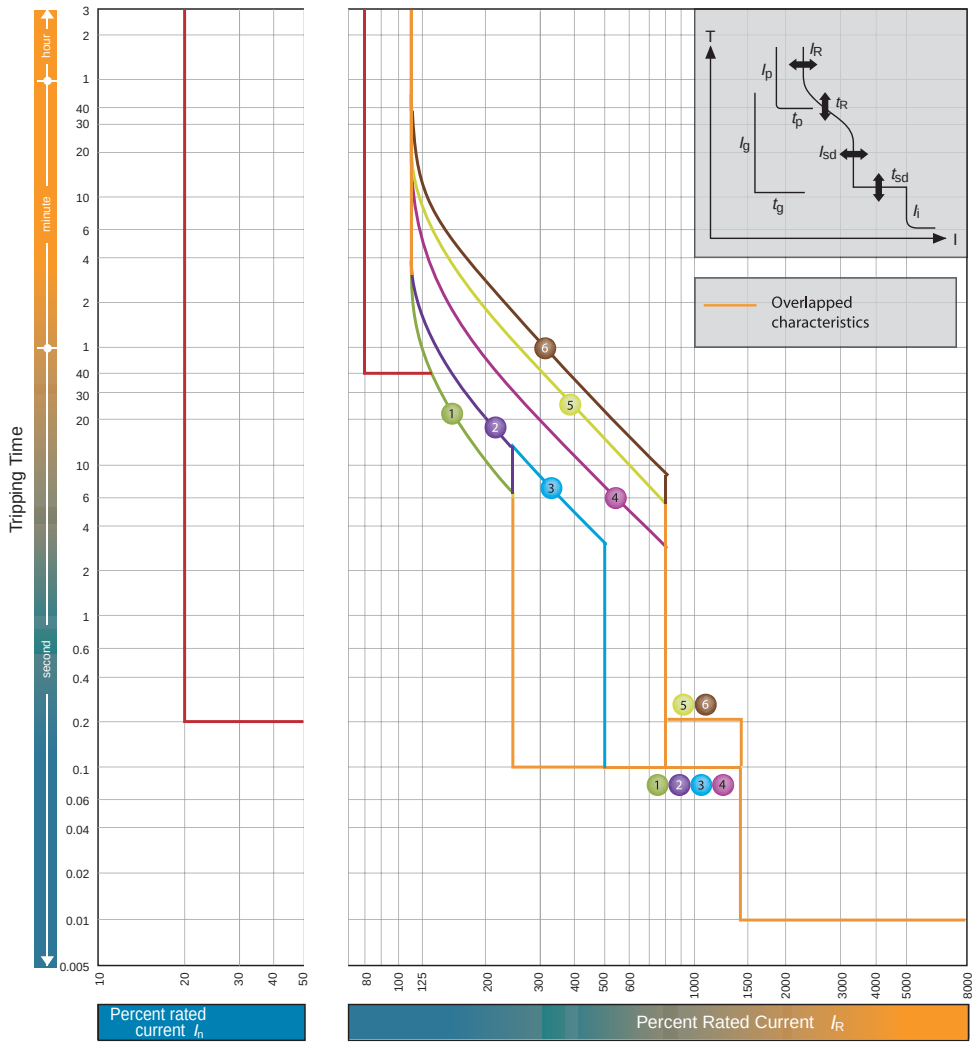

In = 630A

	I_R (A)										
	LTD Pick-up current	I_R	xI_n	0.4	0.5	0.63	0.8	0.85	0.9	0.95	1.0

	Characteristics		No.	1	2	3	4	5	6
Standard	LTD	t_R	(s)	11	21	21	5	10	16
				at 200% x I_R			at 600% x I_R		
	STD	I_{sd}	xI_R	2.5		5	8		
		t_{sd}	(s)	0.1			0.2		
	INST	I_i	xI_R	14(Max: 10 x I_n) Note (1)					
Option	PTA	I_p	xI_R	0.8					
		t_p	(s)	40					
	GFT	I_g	xI_n	0.2					
		t_g	(s)	0.2					
	N	I_N	xI_n	1.0					
		t_N	(s)	t_N=t_R Note(2)					

Note
(1) I_i max. = 10 x I_n. (2) Standard setting of I_N is 100% of I_n. For any other setting please specify when ordering.

SECTION 3

SECTION 3

OPERATING CHARACTERISTICS

LET-THROUGH PEAK CURRENT CHARACTERISTICS

S125-NF. 240V AC

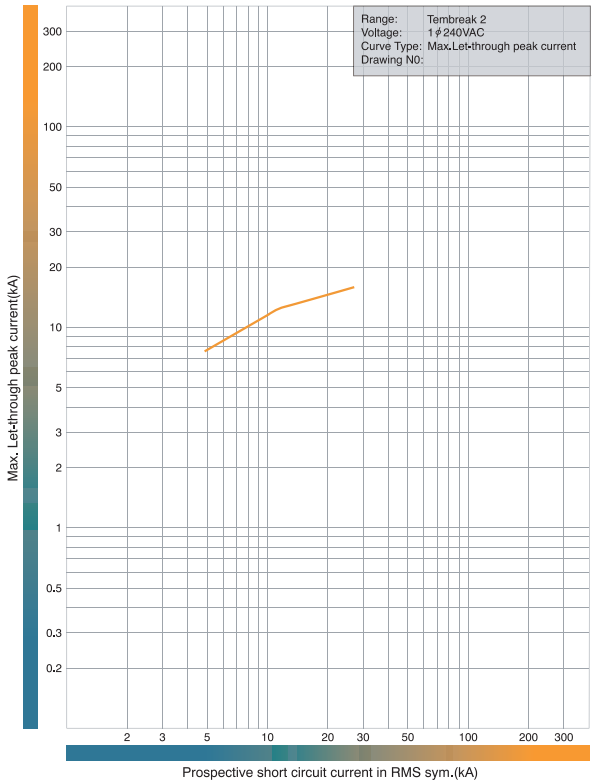

S160-NF. 240V AC.

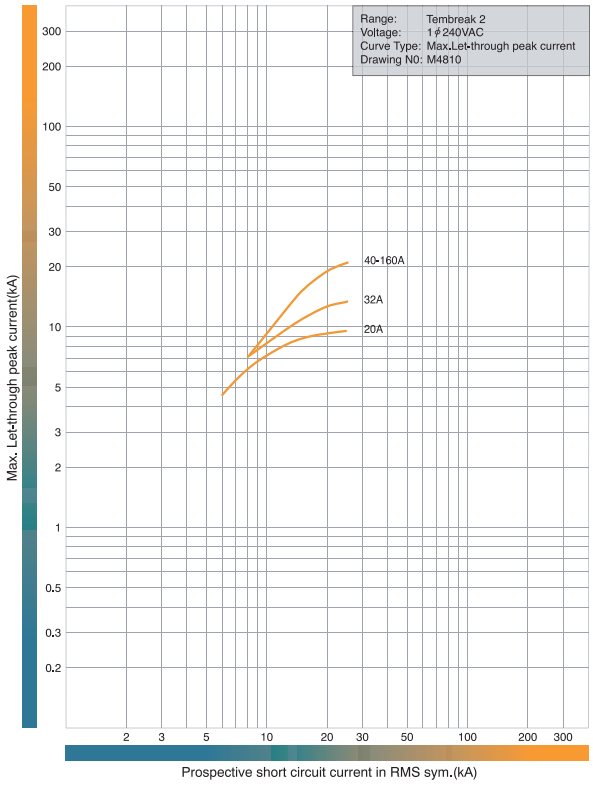

E125-NJ, S125-NJ, S125-GJ. 440V AC.

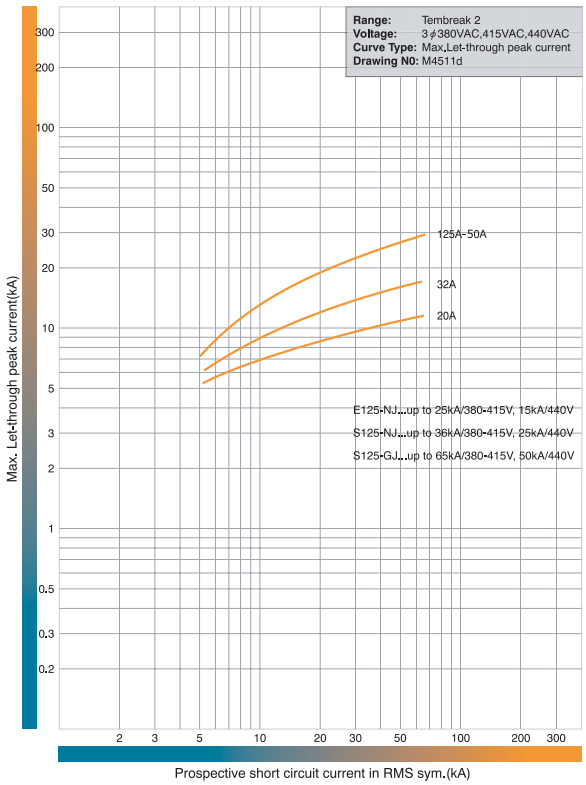

S125-NJ, S125-GJ. 690V AC.

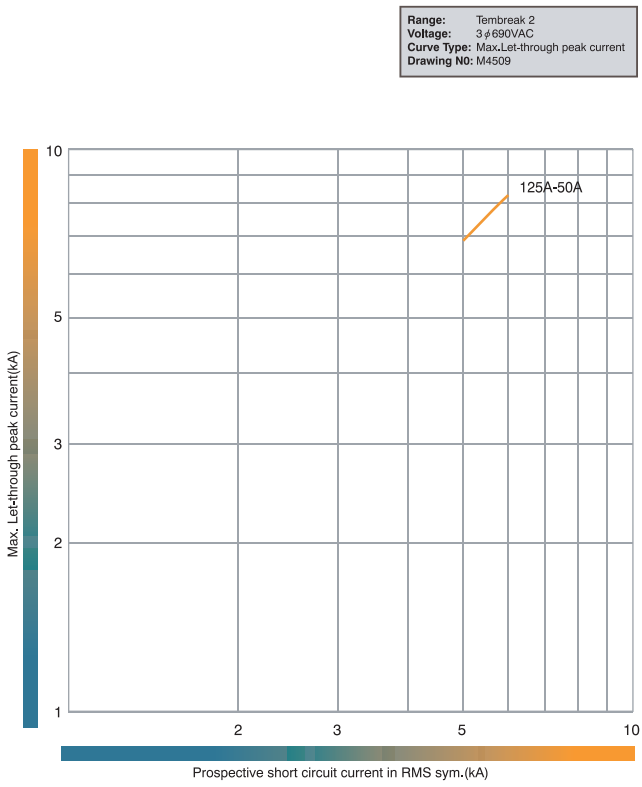

OPERATING CHARACTERISTICS

LET-THROUGH PEAK CURRENT CHARACTERISTICS

H125-NJ, L125-NJ. 440V AC.

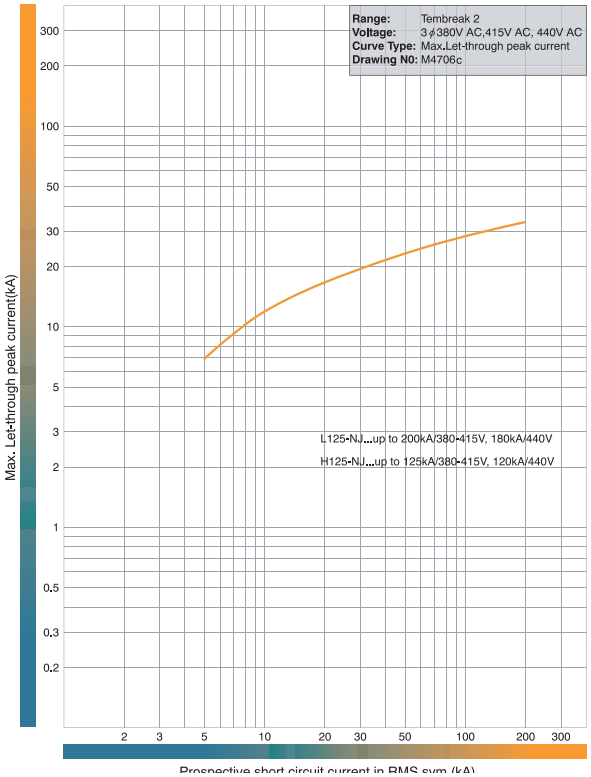

H125-NJ, L125-NJ. 690V AC

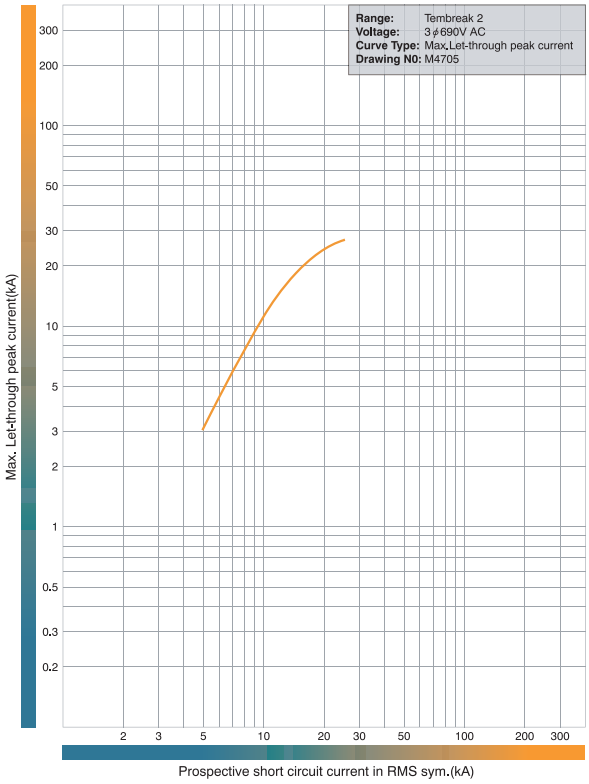

S160-NJ, S160-GJ, E250-NJ, S250-NJ, S250-GJ. 440V AC.

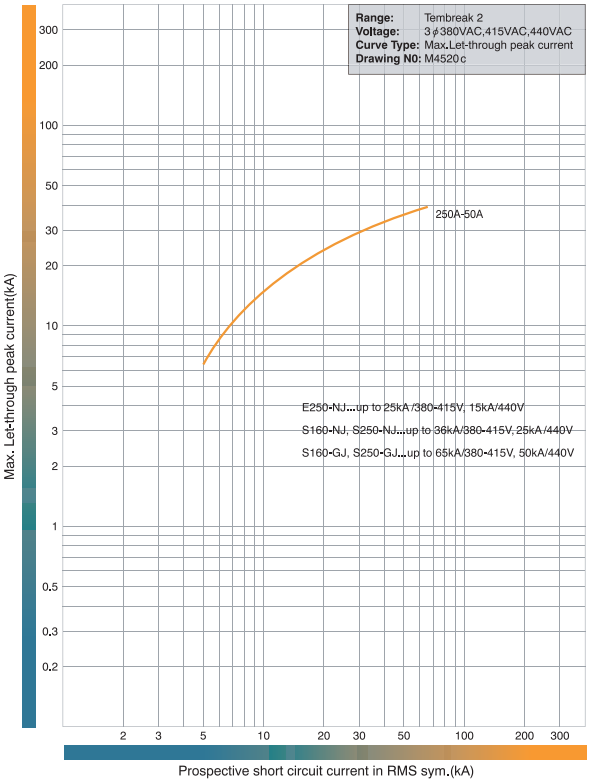

S160-NJ, S160-GJ, S250-NJ, S250-GJ. 690V AC.

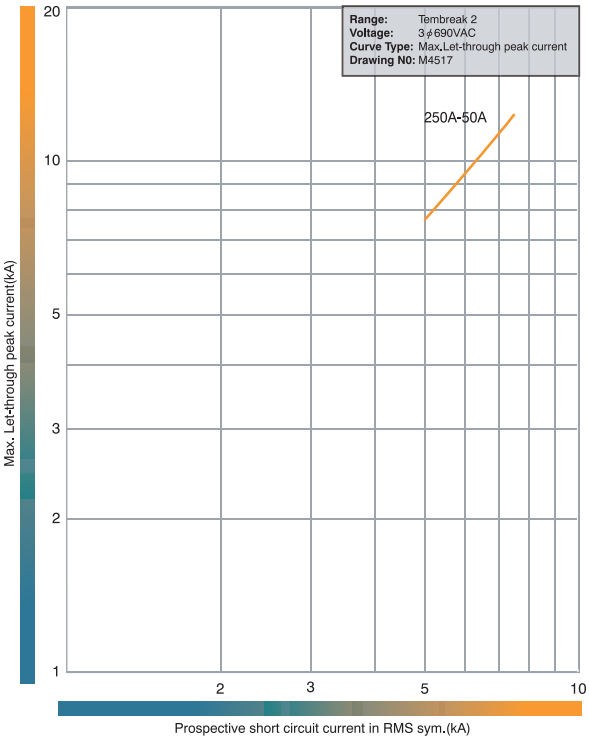

SECTION 3

SECTION 3

OPERATING CHARACTERISTICS

LET-THROUGH PEAK CURRENT CHARACTERISTICS

H160-NJ, L160-NJ, S250-PE, H250-NJ, H250-NE, L250-NJ. 440V AC.

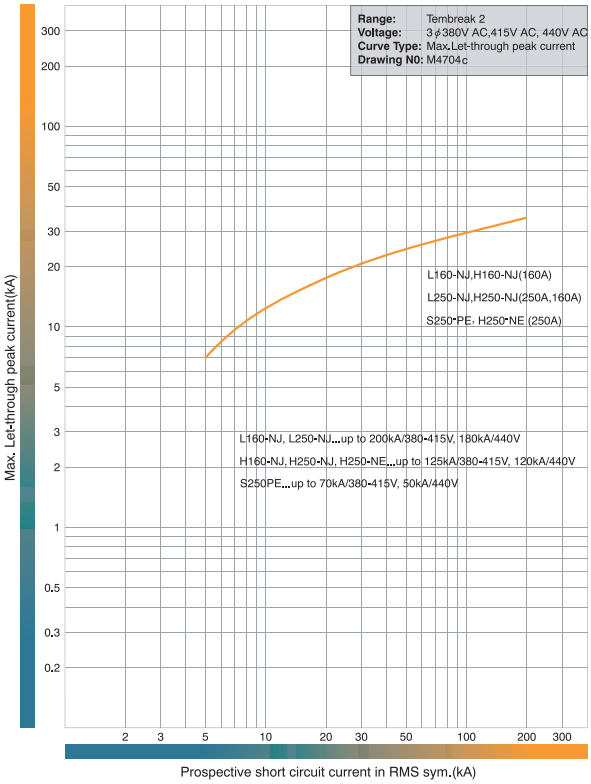

H160-NJ, L160-NJ, S250-PE, H250-NJ, H250-NE, L250-NJ. 690V AC.

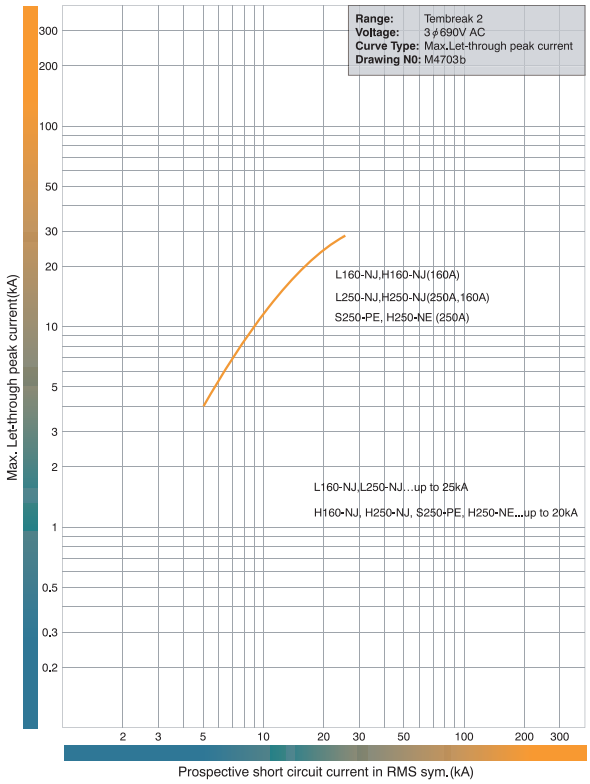

E400-NJ, S400-CJ, S400-NJ, S400-NE, S400-GJ, S400-GE, 415V AC.

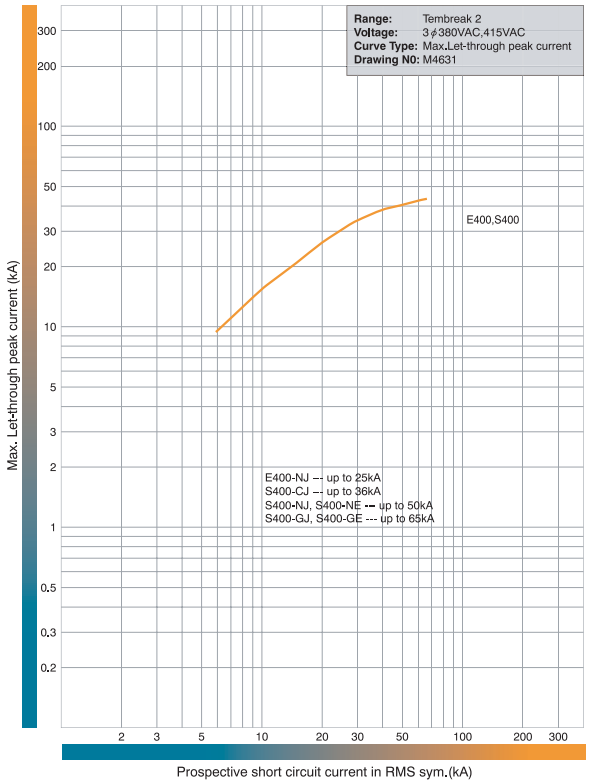

S400-CJ, S400-NJ, S400-NE, S400-GJ, S400-GE, 690V AC.

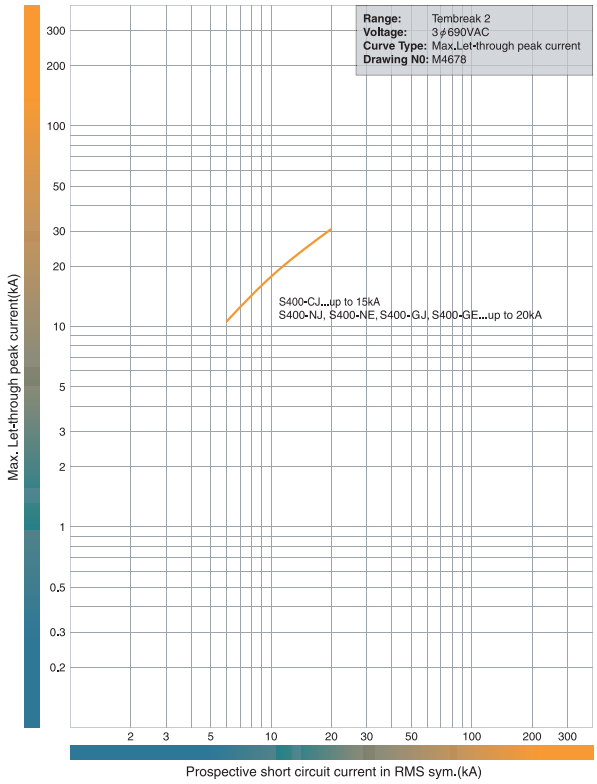

OPERATING CHARACTERISTICS

LET-THROUGH PEAK CURRENT CHARACTERISTICS

H400-NJ, H400-NE, L400-NJ, L400-NE. 415V AC.

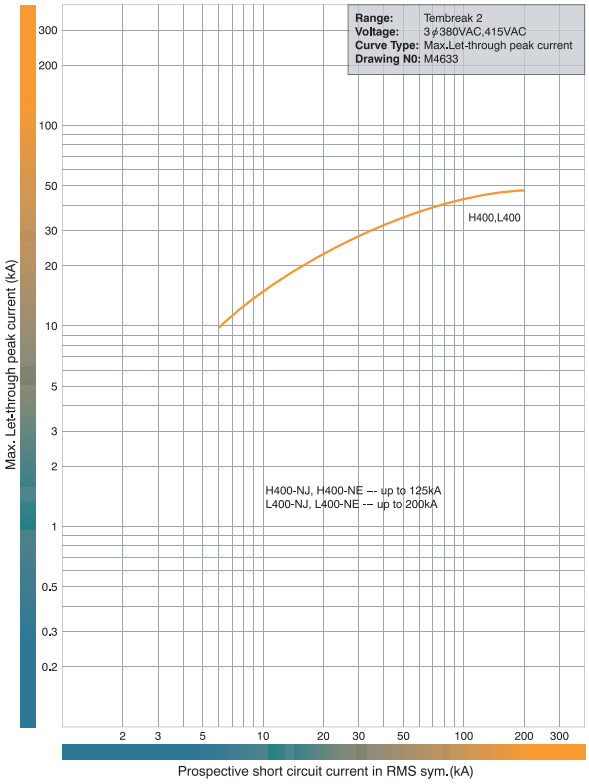

E630-NE, S630-CE, S630-GE. 415V AC.

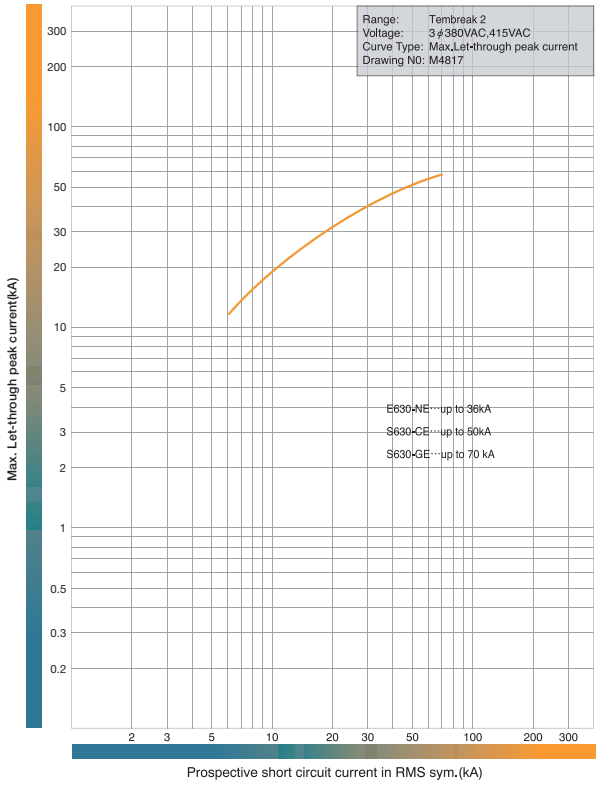

E630-NE, S630-CE, S630-GE. 690V AC.

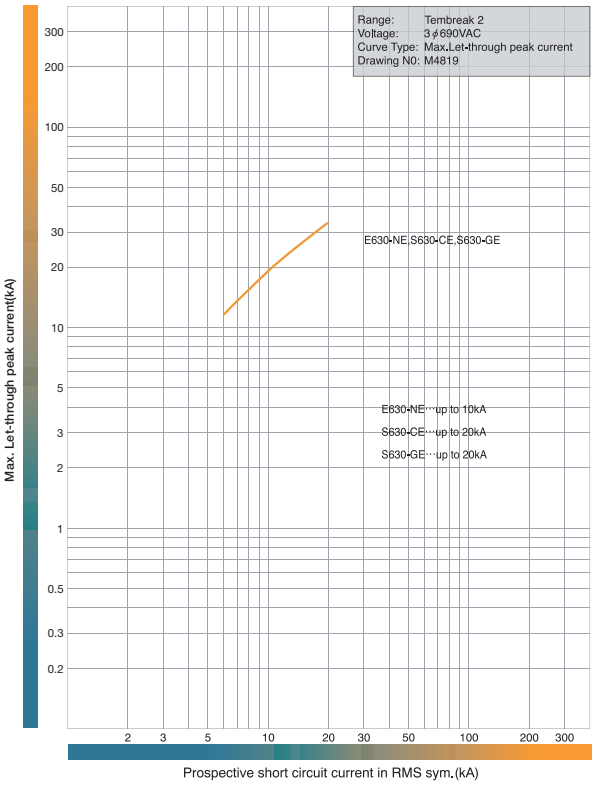

SECTION 3

SECTION 3

OPERATING CHARACTERISTICS

LET-THROUGH ENERGY CHARACTERISTICS

S125-NF. 240V AC

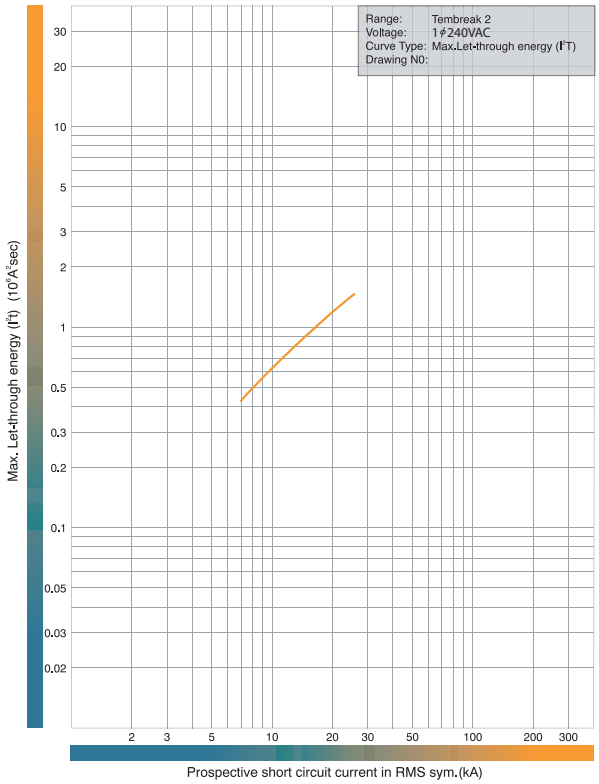

S160-NF. 240V AC

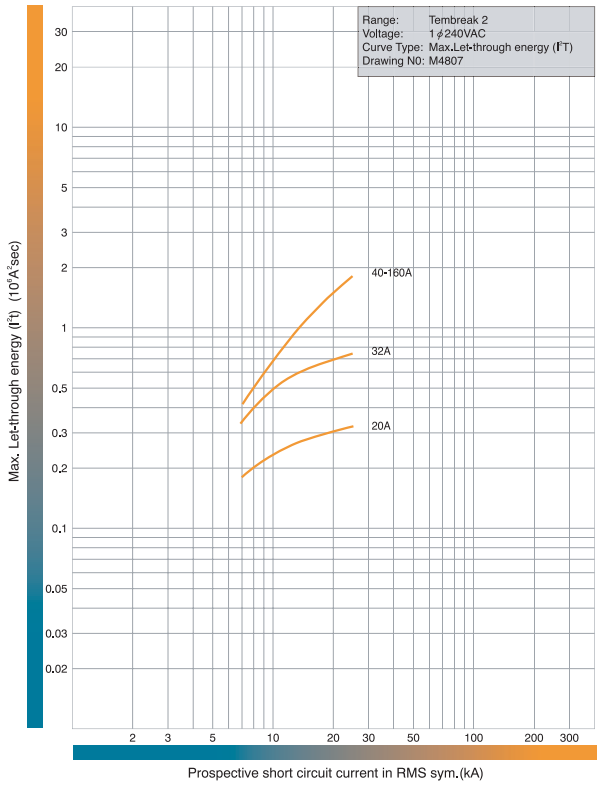

E125-NJ, S125-NJ, S125-GJ. 440V AC.

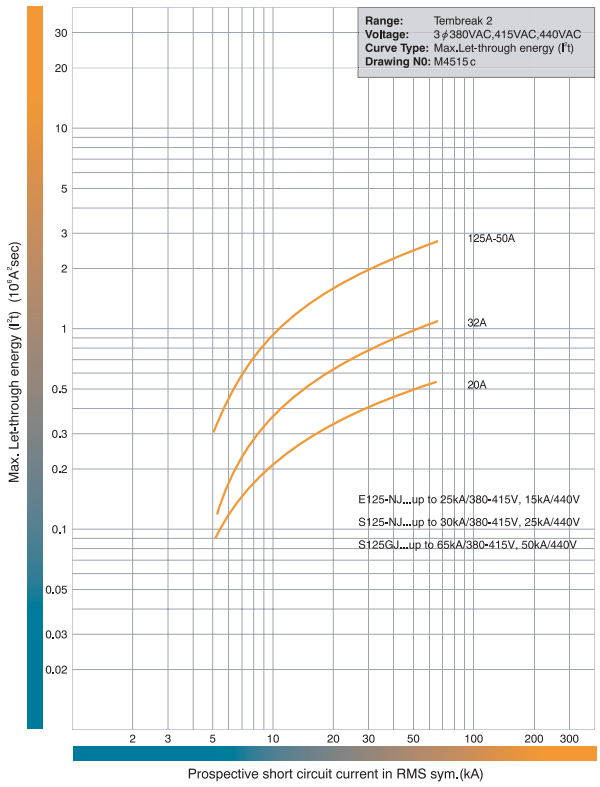

S125-NJ, S125-GJ. 690V AC.

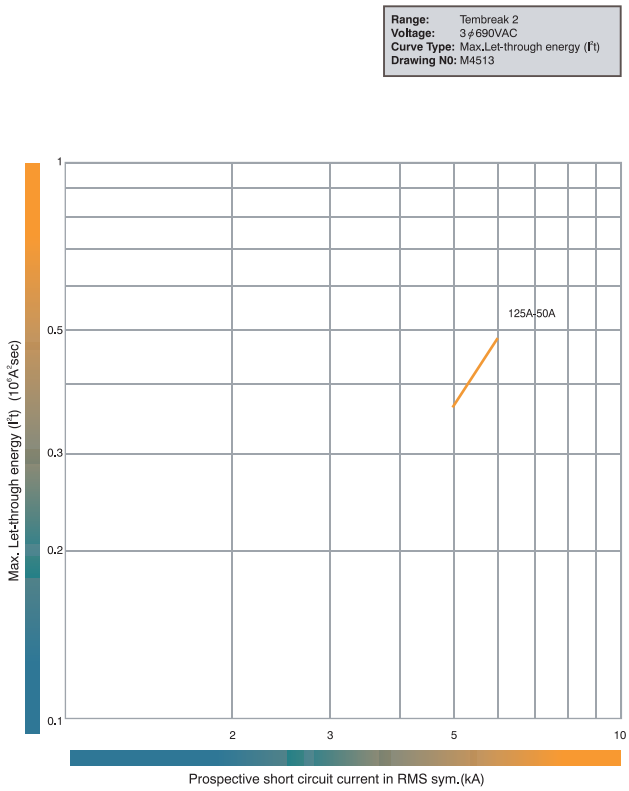

OPERATING CHARACTERISTICS

LET-THROUGH ENERGY CHARACTERISTICS

H125-NJ, L125-NJ. 440V AC.

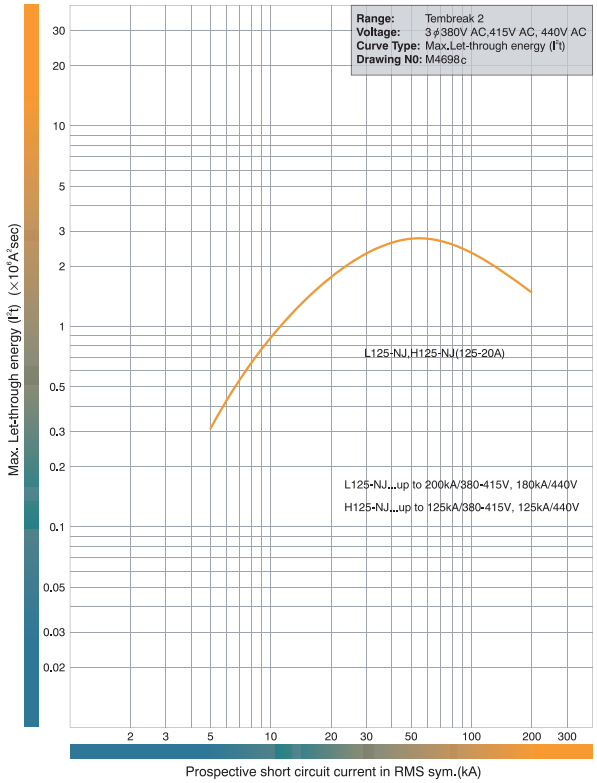

H125-NJ, L125-NJ. 690V AC

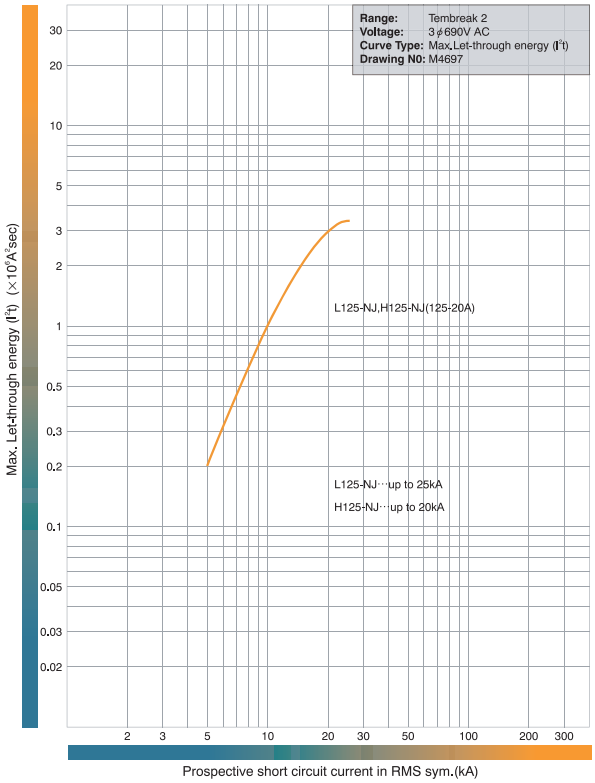

S160-NJ, S160-GJ, E250-NJ, S250-NJ, S250-GJ. 440V AC.

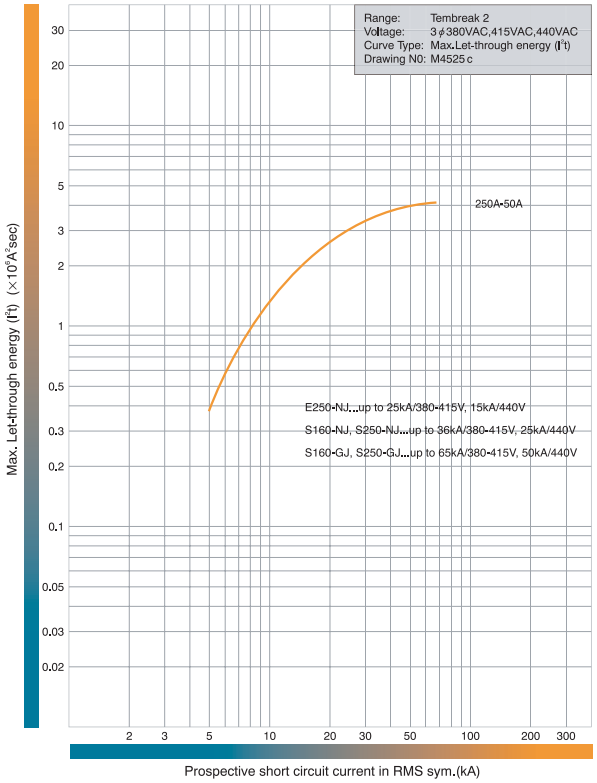

S160-NJ, S160-GJ, S250-NJ, S250-GJ. 690V AC.

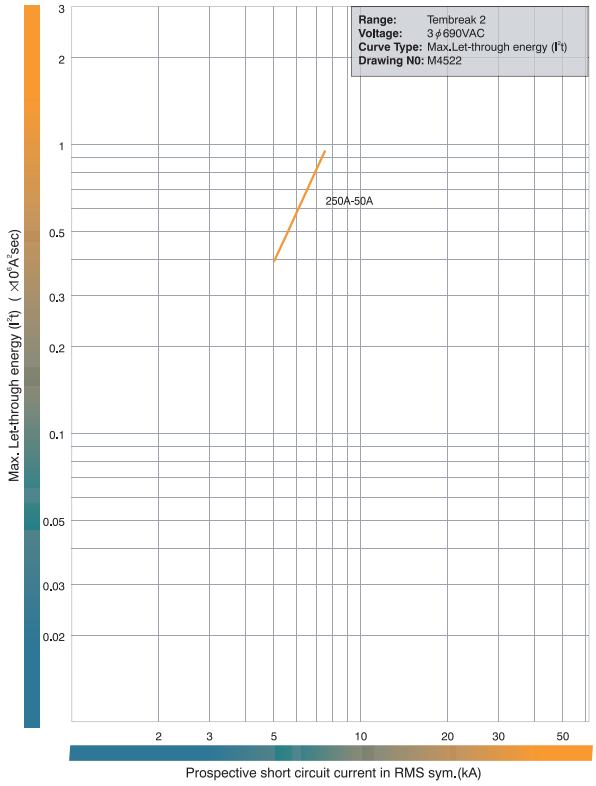

SECTION 3

SECTION 3

OPERATING CHARACTERISTICS

LET-THROUGH ENERGY CHARACTERISTICS

H160-NJ, L160-NJ, S250-PE, H250-NE, H250-NJ, L250-NJ. 440V AC.

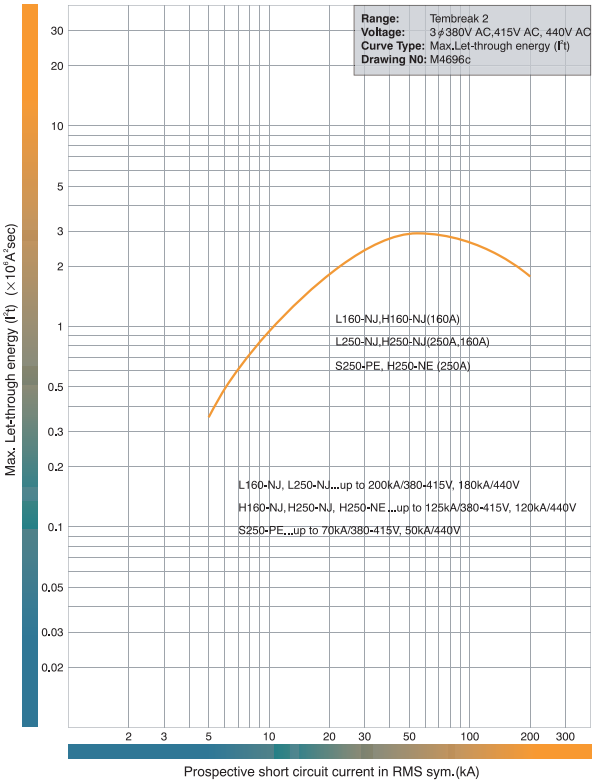

H160-NJ, L160-NJ, S250-PE, H250-NE, H250-NJ, L250-NJ. 690V AC.

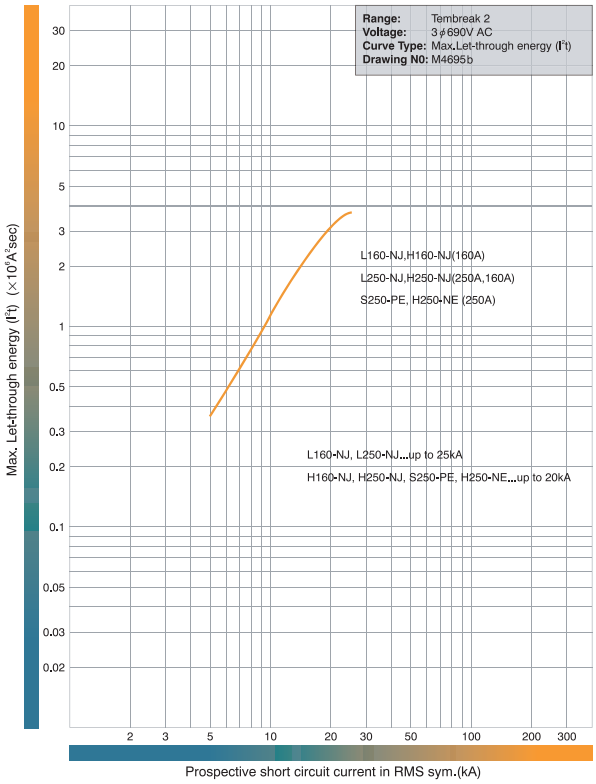

E400-NJ, S400-CJ, S400-NJ, S400-NE, S400-GJ, S400-GE. 415V AC.

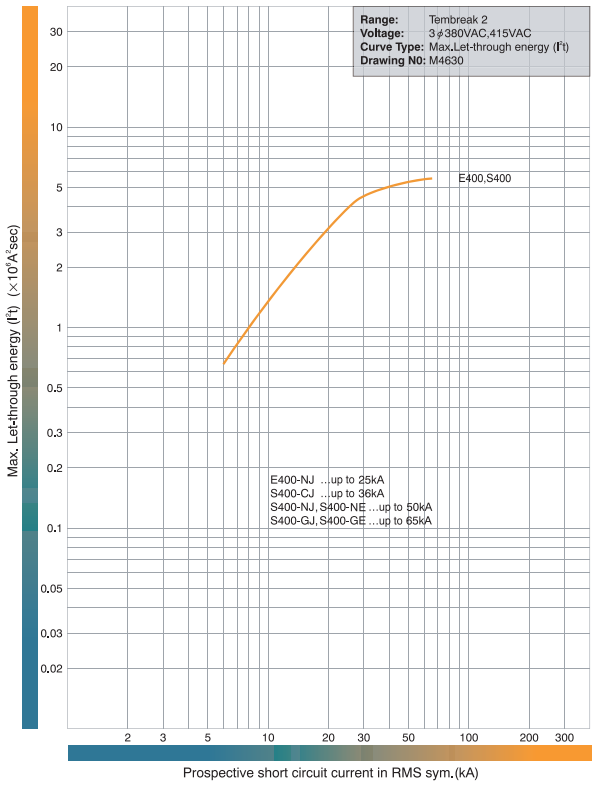

S400-CJ, S400-NJ, S400-NE, S400-GJ, S400-GE. 690V AC.

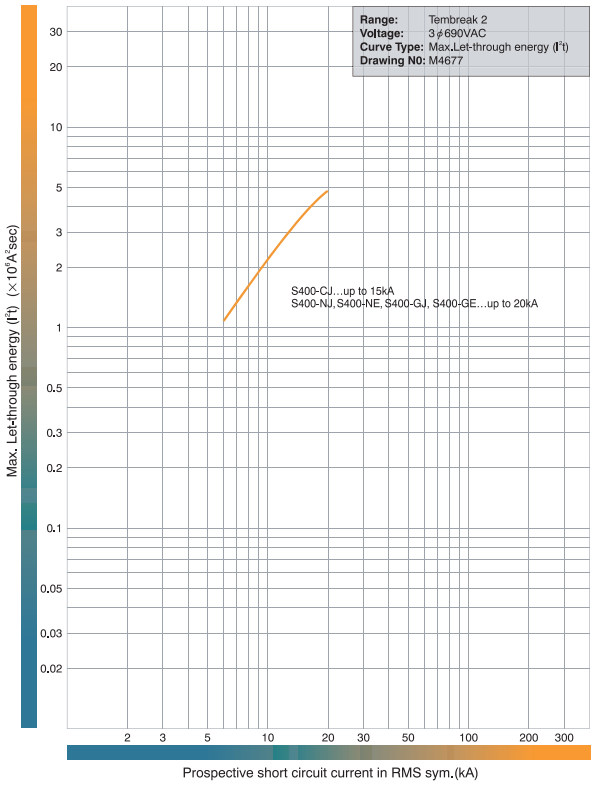

OPERATING CHARACTERISTICS

LET-THROUGH ENERGY CHARACTERISTICS

H400-NJ, H400-NE, L400-NJ, L400-NE. 415V AC.

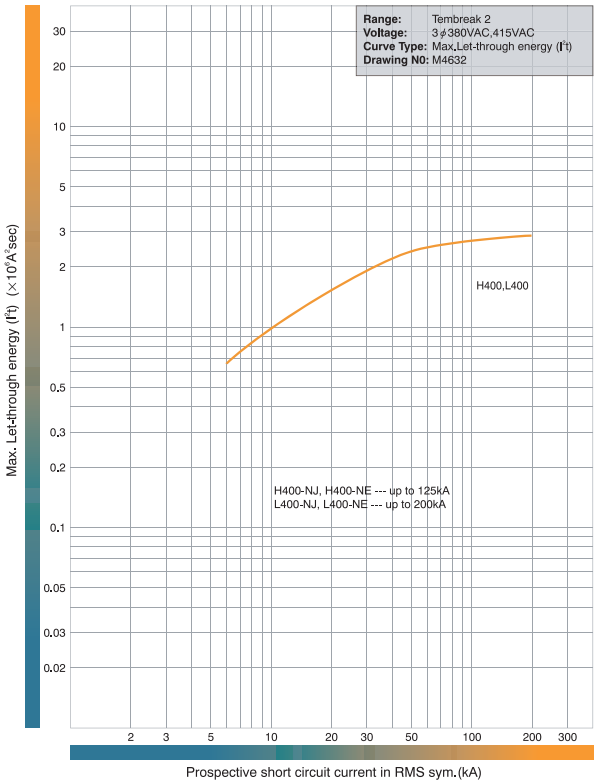

E630-NE, S630-CE, S630-GE. 415V AC.

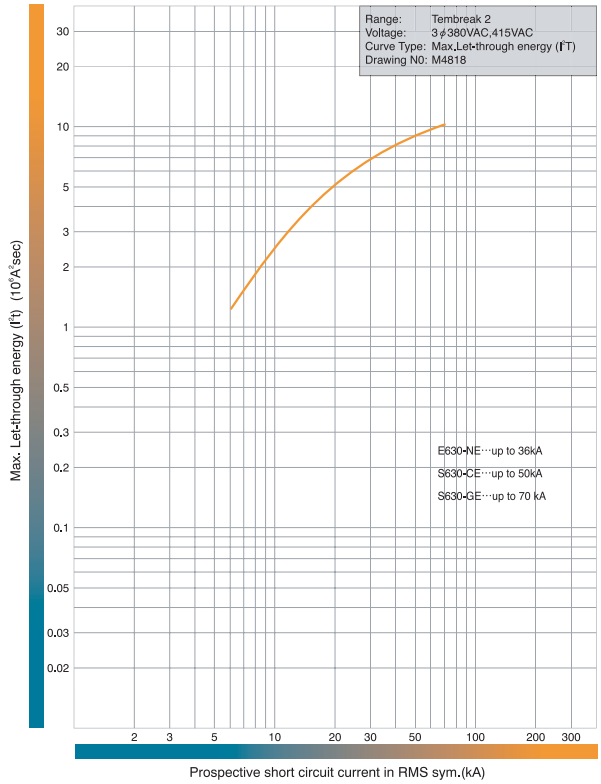

E630-NE, S630-CE, S630-GE. 690V AC.

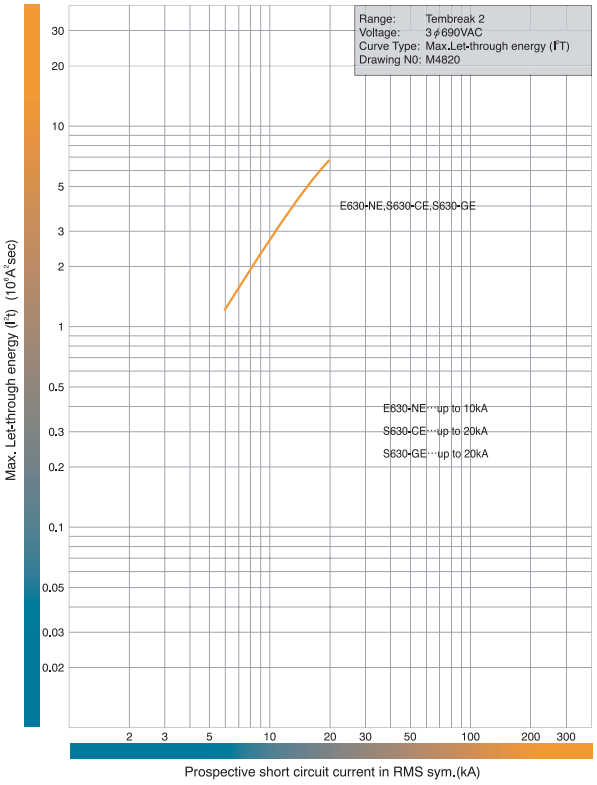

SECTION 3

SYMMETRICAL DOOR CUTOUT PATTERNS

Door cutout patterns for handles are symmetrical, even when breakers are mounted in opposite directions.

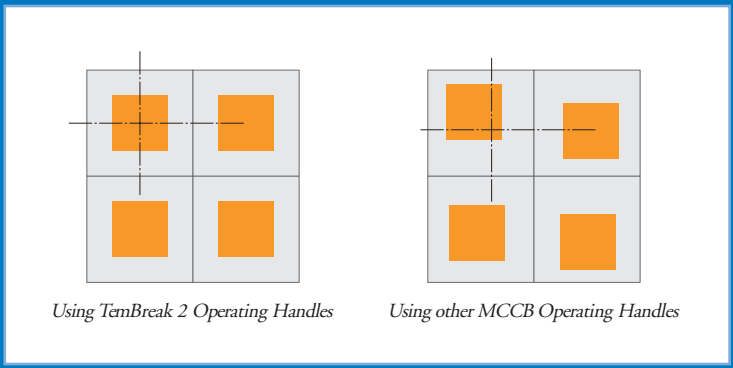

APPLICATION DATA

TEMBREAK 2
MOULDED CASE CIRCUIT BREAKERS
16A TO 630A

1. Welcome to TemBreak 2
2. Ratings and Specifications
3. Operating Characteristics
4. **Application Data**
   - What is Selectivity? 45
   - How to Read the Selectivity Tables 45
   - Selectivity Tables 47
   - What is Cascading? 50
   - How to Read the Cascade Tables 51
   - Cascade Tables 52
5. Accessories
6. Installation
7. Dimensions

SECTION 4

APPLICATION DATA

SELECTIVITY (DISCRIMINATION) AND CASCADE

Selectivity

The principle of Selectivity (Discrimination) is based upon an analysis of several circuit breaker characteristics. These include time-current (tripping) curves, peak-let-through current (I_{peak}) and energy let-through (I^2t).

The figures stated give the maximum selectivity level with the two nominated breakers in series under short-circuit conditions. For an indication on selectivity under overloads refer to the circuit breaker tripping/characteristic curves, or use the NHP TemCurve selectivity analysis software package.

Selectivity can be enhanced beyond the breaking capacity of the downstream breaker provided it is backed up by an appropriately selected upstream breaker, which should not trip (unlatch) under the stated short circuit current.

Cascade

Cascading is achieved by using an upstream device to assist (back-up) a downstream device in clearing a fault current. This principal is necessary should the downstream device be required to clear a prospective short circuit current greater than the devices' breaking capacity.

In most cascading applications it is generally necessary for the upstream breaker to trip (unlatch), as well as the downstream breaker to give adequate back-up protection. As such, cascade is commonly used in feeding and protecting non-essential loads, such as basic lighting.

For more information on selectivity and cascading please refer to the latest NHP Part C catalogue.

APPLICATION DATA

SELECTIVITY TABLES

Selectivity & Cascade Tables @ 400 / 415 V

XX / YY
Selectivity/ Cascade

Downstream MCCBs	Upstream MCCBs kA (RMS)	S250PE 70	H250NE 125	S400NE 50	S400GE 70	H400NE 125	L400NE 200	E630NE 36	S630CE 50	S630GE 70	TL630NE 125	XS800SE 50	XH800SE 65	TL800NE 125	XS1250SE 85	TL1250NE 125	XS1600SE 100	XS2000NE 85	XS2500NE 85
E125NJ	25	25/25	25/65	25/36	25/50	25/65	25/85	25/36	25/25	25/50	25/25	25/36	25/36	25/65	25/25	25/25	25/25	25/25	25/25
S125NJ	36	36/36	36/85	36/50	36/65	36/85	36/125	36/36	36/36	36/65	36/36	36/50	36/36	36/36	36/36	36/36	36/36	36/36	36/36
S125GJ	65	65/65	65/125	50/50	65/70	65/125	65/150	36/36	50/50	65/70	65/65	65/50	65/65	65/65	65/65	65/65	65/65	65/65	65/65
H125NJ	125	70/70	125/125	50/50	70/70	125/125	125/200	36/36	50/50	70/70	70/70	50/50	65/65	65/65	85/50	85/50	100/100	85/85	85/85
S160NJ	36			36/50	36/65	36/85	36/125	36/36	36/50	36/50	36/36	36/36	36/65	36/65	36/36	36/36	36/36	36/36	36/36
S160GJ	65			50/50	65/70	65/125	65/150	36/36	50/50	65/70	65/65	50/50	50/65	50/65	65/65	65/65	65/65	65/65	65/65
H160NJ	125					125/125	125/200	36/36	50/50	70/70	70/70	50/50	50/65	50/65	85/65	85/65	100/100	85/85	85/85
E250NJ	25					25/65	25/85	25/36	25/25	25/50	25/25	25/25	25/50	25/50	25/25	25/25	25/25	25/25	25/25
S250NJ	36					36/85	36/125	36/36	36/36	36/65	36/36	36/36	36/36	36/36	36/36	36/36	36/36	36/36	36/36
S250GJ	65					65/125	65/150	36/36	50/50	65/70	65/65	50/50	50/65	50/65	65/65	65/65	65/65	65/65	65/65
S250PE	70					40/125	70/150	36/36	50/50	70/70	70/70	50/50	50/65	50/65	70/70	70/70	70/70	70/70	70/70
H250NJ	125					125/125	125/200	36/36	50/50	70/70	70/70	50/50	50/65	50/65	85/85	85/85	100/100	85/85	85/85
H250PE	125					125/125	125/200	36/36	50/50	70/70	70/70	50/50	50/65	50/65	85/85	85/85	100/100	85/85	85/85
E400NJ	25							10/25	10/25	10/50	10/36	25/25	25/25	25/36	25/25	25/25	25/36	25/25	25/25
S400CJ	36							10/36	10/36	10/65	10/50	25/36	25/36	25/50	36/36	36/36	36/50	36/36	36/36
S400NE	50							10/36	10/50	10/50	10/50	25/50	25/50	25/50	50/50	50/50	50/50	50/50	50/50
S400NJ	50							10/36	10/36	10/70	10/65	25/50	25/50	25/65	50/50	50/50	50/65	50/50	50/50
S400GJ	70							10/36	10/50	10/70	10/70	25/50	25/50	25/65	70/36	70/36	70/85	70/70	70/70
H400NJ	125							10/36	10/50	10/70	10/70	25/50	25/65	25/65	125/85	125/85	125/100	125/85	125/85
H400NE	125							10/36	10/50	10/70	10/70	25/50	25/65	25/65	125/85	125/85	125/100	125/85	125/85
E630NE	36											25/36	25/36	25/36	36/36	36/36	36/36	36/36	36/36
E630CE	50											25/50	25/50	25/50	50/50	50/50	50/50	50/50	50/50
S630GE	70														70/70	70/70	70/70	70/70	70/70
XS630CJ	45														30/45	30/45	30/45	35/45	35/45
XS630NJ	65														30/65	30/65	30/65	35/65	36/65
XS630PJ	85														30/85	30/85	30/85	35/85	35/85
XS630SE	50														30/65	30/65	30/85	30/85	30/85
XH630SE	65														30/65	30/65	30/85	30/85	30/85
XH630PE	65														30/65	30/65	30/85	30/85	30/85
XS800NJ	65														15/65	15/65	20/65	35/65	35/65
XS800SE	50														15/50	15/50	20/50	35/50	35/50
XJ800PJ	85														15/85	15/85	20/85	35/85	35/85
XH800SE	65														15/65	15/65	20/65	35/65	35/65
XH800PE	65														15/65	15/65	20/65	35/65	35/65
XS1250SE	65																20/65	35/65	35/65
XS1600SE	85																	35/85	35/85

SECTION 4

APPLICATION DATA

CASCADE TABLES

CASCADE @ 380 – 415 V AC [1] Downstream MCCBs	kA (RMS)	E125NJ	S125NJ	S125GJ	H125NJ	L125NJ	S160NJ	S160GJ	H160NJ	L160NJ	E250NJ	S250NJ	S250GJ	S250PE	H250NJ	H250NE	L250NJ
		25	36	65	125	200	36	65	125	200	25	36	65	70	125	125	200
E125NJ	25	–	36	36	65	85	36	36	65	85	–	36	36	–	65	65	85
S125NJ	36	–	–	50	85	125	–	50	85	125	–	–	–	–	85	85	125
S125GJ	65	–	–	–	125	150	–	–	125	150	–	–	65	–	125	125	150
H125NJ	125	–	–	–	–	200	–	–	-	200	–	–	65	–	–	–	200
S160NJ	36	–	–	65	–	–	–	65	85	125	–	–	65	65	85	85	125
S160GJ	65	–	–	–	–	–	–	–	125	150	–	–	–	70	125	125	150
H160NJ	125	–	–	–	–	–	–	–	–	200	–	–	–	-	–	–	200
S250NJ	36	–	–	–	–	–	–	65	–	–	–	–	–	65	85	85	125
S250GJ	65	–	–	–	–	–	–	–	–	–	–	–	–	70	125	125	150
S250PE	70	–	–	–	–	–	–	–	–	–	–	–	–	–	125	125	150
H250NJ	125	–	–	–	–	–	–	–	–	–	–	–	–	–	–	–	200
E400NJ	25	–	–	–	–	–	–	–	–	–	–	–	–	36	65	65	–
S400CJ	36	–	–	–	–	–	–	–	–	–	–	–	–	50	70	70	–
S400NJ	50	–	–	–	–	–	–	–	–	–	–	–	50	65	85	85	–
S400GJ	70	–	–	–	–	–	–	–	–	–	–	–	50	–	125	125	–
H400NJ	125	–	–	–	–	–	–	–	–	–	–	–	–	–	–	–	–

Note: [1]) Ratings have not been verified where a dash "–" is shown.

All pick-up and time delay settings are to be set at a maximum for upstream MCCB's

Upstream MCCBs

CASCADE @ 380 – 415 V AC [1] Downstream MCCBs	kA (RMS)	S400CJ	S400NE S400NJ	S400GE S400GJ	H400NJ H400NE	L400NJ	L400NE	E630NE	S630CE	S630GE	TL630NE	XS800SE	XS800NJ	XH800SE	TL800NE	XS1250SE	XS1600SE
		36	50	70	125	200	200	36	50	70	125	65	65	65	200	65	85
E125NJ	25	36	36	50	65	85	85	36	-	50	–	36	36	36	–	–	–
S125NJ	36	–	50	65	85	125	125	–	-	65	–	50	50	–	–	–	–
S125GJ	65	–	–	70	125	150	150	–	50	70	–	–	–	65	–	–	–
H125NJ	125	–	–	–	–	200	200	–		-	–	–	–	65	–	50	–
S160NJ	36	–	50	65	85	125	125	–	50	50	–	–	65	65	–	–	–
S160GJ	65	–	–	70	125	150	150	–	–	70	–	–	–	–	–	–	–
H160NJ	125	–	–	–	–	200	200	–	–	–	–	–	–	65	–	65	–
E250NJ	25	36	36	50	65	85	85	36	–	50	–	–	36	50	–	–	–
S250NJ	36	–	50	65	85	125	125	–	–	65	–	–	65	–	–	–	–
S250GJ	65	–	–	70	125	150	150	–	–	70	–	–	–	–	–	–	–
S250PE	70	–	–	–	125	150	150	–	–	–	–	–	–	–	–	–	–
H250NJ	125	–	–	–	–	200	200	–	—	–	–	–	–	–	–	–	–
E400NJ	25	36	36	50	65	85	85	36	–	50	36	–	–	–	36	–	36
S400CJ	36	–	50	65	70	100	100	–	–	65	50	–	–	–	50	–	50
S400NJ	50	–	–	70	85	125	125	–	36	70	65	–	–	50	65	–	65
S400GJ	70	–	–	–	125	150	150	–	36	–	–	–	–	50	–	36	85
H400NJ	125	–	–	–	–	200	200	–	–	–	–	–	–	–	–	–	–

Note: [1]) Ratings have not been verified where a dash "–" is shown.

All pick-up and time delay settings are to be set at a maximum for upstream MCCBs

APPLICATION DATA

SELECTIVITY AND CASCADE TEMBREAK 2 MCCBs AND DIN-T / SAFE-T MCBs

SELECTIVITY / CASCADE @ 415 V AC			Upstream MCCB							
Downstream MCB	Amp rating	kA (RMS)	E125NJ	S125NJ	H125NJ S125GJ	S250NJ	S250GJ	S400CJ	S400GE S400GJ	H400NJ
			25	36	65	36	65	36	70	125
DTCB6	2 – 20	6	18/18	25/25	35/35	35/35	35/35	–	–	–
	25 – 63	6	18/18	20/25	20/25	30/30	30/30	–	–	–
DTCB10	0.5 – 32	10	18/18	30/30	30/50	35/35	40/50	35/35	40/50	40/50
	40 – 63	10	18/18	20/25	25/25	30/30	30/30	30/30	30/30	30/30
DSRCBH /	0.5 – 32	10	18/18	30/30	30/50	35/35	40/50	35/35	40/50	40/50
DSRCD	40	10	18/18	20/25	25/25	30/30	30/30	30/30	30/30	30/30
Din-T10H	80 – 125	10	4/18	4/25	4/25	15/15	15/15	10/10	10/10	–
DTCH15	0.5 – 32	15	18/18	30	30/50	35/35	40/50	35/35	40/50	40/50
	40 – 63	15	18/18	20	25/25	30/30	30/30	30/30	30/30	30/30
Safe-T	16 – 20	6	3/10	3/10	3/10	–	–	–	–	–
SRCB	16 – 20	6	3/10	3/10	3/10	–	–	–	–	–

Guide

X X / Y Y

Selectivity Cascade

Notes: All figures stated are at 400/415 V AC.

SECTION 4

APPLICATION DATA

MOTOR STARTING TYPE 1 CO-ORDINATION TABLES

Short-Circuit Co-Ordination Motor Starting Table

Type '1'
Terasaki MCCB's & Sprecher + Schuh KT7's
DOL starting 50/65 kA @ 400/415 V to AS/NZS 60947.4.1

TYPE 1 50/65 kA

		Terasaki Combinations	
Motor Size (kW)	Approx. amps @ 400/415 V (A)	MCCB	Contactor
0.37	1.1	XM30PB/1.4	CA7-9
0.55	1.5	XM30PB/2	CA7-9
0.75	1.8	XM30PB/2.6	CA7-9
1.1	2.6	XM30PB/4.0	CA7-9
1.5	3.4	XM30PB/5	CA7-9
2.2	4.8	XM30PB/8	CA7-9
3	6.5	XM30PB/10	CA7-9
4	8.2	XM30PB/12	CA7-9
5.5	11	S125GJ/20	CA7-12
7.5	14	S125GJ/20	CA7-16
11	21	S125GJ/32	CA7-23
15	28	S125GJ/50	CA7-30
18.5	34	S125GJ/50	CA7-37
22	40	S125GJ/63	CA7-43
30	55	S125GJ/100	CA7-60
37	66	S125GJ/100	CA7-72
45	80	S125GJ/125	CA7-85
55	100	S125GJ/125	CA6-110
5	130	S250PE/250	CA6-140
0	155	S250PE/250	CA6-180
10	200	S250PE/250	CA6-210
32	225	S400GE/400	CA6-210
60	270	S400GE/400	CA6-300
00	361	S400GE/400	CA6-420

Terasaki Combinations		Sprecher + Schuh Combinations	
Overload Relay	Thermal Setting (A)	KT7 Circuit Breaker	Contactor
CT 7-24	1.0 - 1.6	KTA7-25S-1.0A	CA7-9
CT 7-24	1.0 - 1.6	KTA7-25S-1.6A	CA7-9
CT 7-24	1.6 - 2.4	KTA7-25S-2.5A	CA7-9
CT 7-24	2.4 - 4.0	KTA7-25S-2.5A	CA7-9
CT 7-24	2.4 - 4.0	KTA7-25S-4.0A	CA7-9
CT 7-24	4.0 - 6.0	KTA7-25S-6.3A	CA7-9
CT 7-24	6.0 - 10	KTA7-25S-6.3A	CA7-9
CT 7-24	6.0 - 10	KTA7-25S-10A	CA7-9
CT 7-24	10 - 16	KTA7-25H-16A	CA7-12
CT 7-24	10 - 16	KTA7-25H-16A	CA7-16
CT 7-24	16 - 24	KTA7-45H-20A	CA7-23
CT 7-45	18 - 30	KTA7-45H-32A	CA7-30
CT 7-45	30 - 45	KTA7-45H-45A	CA7-37
CT 7-45	30 - 45	KTA7-45H-45A	CA7-43
CT 7-75	45 - 60	KTA3-100-63A	CA7-60
CT 7-75	60 - 75	KTA3-100-90A	CA7-72
CT 7-100	70 - 90	KTA3-100-90A	CA7-85
CEF 1-11/12	20 - 180	KTA3-160S-100A	CA6-110
CEF 1-11/12	20 - 180	KTA3-160S-160A	CA6-140
CEF 1-11/12	20 - 180	KTA3-160S-160A	CA6-180
CEF 1-41/42	160 - 400	KTA3-250S-200A	CA6-210
CEF 1-41/42	160 - 400	KTA3-250S-250A	CA6-250
CEF 1-41/42	160 - 400	KTA3-400S-320A	CA6-300
CEF 1-41/42	160 - 400	KTA3-400S-400A	CA6-420

Notes:
- Thermal or electronic overload relays may be used.
- XM30PB MCCB's can be replaced with S125GJ/20 if required.
- Combinations based on the thermal overload relay tripping before the circuit. breaker at overload currents up to the motor locked rotor current.

SECTION 4

APPLICATION DATA

MOTOR STARTING TYPE 2 CO-ORDINATION TABLES

Short-Circuit Co-Ordination DOL Motor Starting Table

Type '2'
Terasaki MCCB's & Sprecher + Schuh KT7's
DOL starting 50/65 kA @ 400/415 V to AS/NZS 60947.4.1

TYPE 2 50/65 kA

		Terasaki Combinations	
Motor Size (kW)	Approx. amps @ 400/415 V (A)	MCCB	Contactor
0.37	1.1	XM30PB/1.4	CA7-9
0.55	1.5	XM30PB/2	CA7-9
0.75	1.8	XM30PB/2.6	CA7-9
1.1	2.6	XM30PB/4.0	CA7-16
1.5	3.4	XM30PB/5	CA7-16
2.2	4.8	XM30PB/8	CA7-16
3	6.5	XM30PB/10	CA7-30
4	8.2	XM30PB/12	CA7-30
5.5	11	S125GJ/20	CA7-30
7.5	14	S125GJ/20	CA7-30
11	21	S125GJ/32	CA7-30
15	28	S125GJ/50	CA7-43
18.5	34	S125GJ/50	CA7-43
22	40	S125GJ/63	CA7-43
30	55	S125GJ/100	CA7-72
37	66	S125GJ/100	CA7-72
45	80	S125GJ/125	CA6-105
55	100	S250PE/160	CA6-105
75	130	S250PE/250	CA6-140
90	155	S250PE/250	CA6-170
110	200	S250PE/250	CA6-210
132	225	S400PE/400	CA6-210
160	270	S400PE/400	CA6-300
200	361	S400PE/400	CA6-420

Terasaki Combinations		Sprecher + Schuh Combinations	
Overload Relay	Thermal Setting (A)	KT7 Circuit Breaker	Contactor
CT 7-24	1.0 - 1.6	KTA7-25S-1A	CA7-9
CT 7-24	1.0 - 1.6	KTA7-25S-1.6A	CA7-9
CT 7-24	1.6 - 2.4	KTA7-25S-2.5A	CA7-9
CT 7-24	2.4 - 4.0	KTA7-25S-2.5A	CA7-9
CT 7-24	2.4 - 4.0	KTA7-25S-4A	CA7-9
CT 7-24	4.0 - 6.0	KTA7-25S-6.3A	CA7-9
CT 7-24	6.0 - 10	KTA7-25S-6.3A	CA7-9
CT 7-24	6.0 - 10	KTA7-25S-10A	CA7-9
CT 7-24	10 - 16	KTA7-25H-16A	CA7-12
CT 7-24	10 - 16	KTA7-25H-16A	CA7-16
CT 7-24	16 - 24	KTA7-45H-20A	CA7-23
CT 7-45	18 - 30	KTA7-45H-32A	CA7-30
CT 7-45	30 - 45	KTA7-45H-45A	CA7-37
CT 7-45	30 - 45	KTA7-45H-45A	CA7-43
CT 7-75	45 - 60	KTA3-100-63A	CA7-60
CT 7-75	60 - 75	KTA3-100-90A	CA7-72
CT 7-100	70 - 90	KTA3-100-90A	CA7-85
CEF 1-11/12	20 - 180	KTA3-160S-100A	CA6-110
CEF 1-11/12	20 - 180	KTA3-160S-160A	CA6-140
CEF 1-11/12	20 - 180	KTA3-160S-160A	CA6-180
CEF 1-41/42	160 - 400	KTA3-250S-200A	CA6-210
CEF 1-41/42	160 - 400	KTA3-250S-250A	CA6-250
CEF 1-41/42	160 - 400	KTA3-400S-320A	CA6-300
CEF 1-41/42	160 - 400	KTA3-400S-400A	CA6-420

Notes:
- Thermal or electronic overload relays may be used.
- XM30PB combinations can be replaced with S125GJ/20 and CA7-30 if required.
- Combinations based on the thermal overload relay tripping before the circuit breaker at overload currents up to the motor locked rotor current.

SECTION 4

APPLICATION DATA

MOTOR STARTING TYPE 2 CO-ORDINATION

Short-Circuit Co-Ordination DOL Motor Starting Table

Type '2'
Terasaki MCCB's & Sprecher + Schuh KT7's
DOL starting 85 kA @ 400/415 V to AS/NZS 60947.4.1

TYPE 2
85 kA

		Terasaki Combinations	
Motor Size (kW)	Approx. amps @ 400/415 V (A)	MCCB	Contactor
0.37	1.1	XM30PB/1.4	CA 7-9
0.55	1.5	XM30PB/2	CA 7-9
0.75	1.8	XM30PB/2.6	CA 7-9
1.1	2.6	XM30PB/4.0	CA 7-16
1.5	3.4	XM30PB/5	CA 7-16
2.2	4.8	XM30PB/8	CA 7-30
3	6.5	XM30PB/10	CA 7-30
4	8.2	XM30PB/12	CA 7-30
5.5	11	H125NJ/20	CA 7-30
7.5	14	H125NJ/20	CA 7-30
11	21	H125NJ/32	CA 7-30
15	28	H125NJ/50	CA 7-43
18.5	34	H125NJ/50	CA 7-43
22	40	H125NJ/63	CA 7-43
30	55	H125NJ/100	CA 7-72
37	66	H125NJ/100	CA 7-72
45	80	H125NJ/160	CA 6-105
55	100	H160NJ/160	CA 6-105
75	130	H250PE/250	CA 6-210
90	155	H250PE/250	CA 6-210
110	200	H250PE/250	CA 6-210
132	225	H400NE/400	CA 6-210
160	270	H400NE/400	CA 6-300
200	361	H400NE/400	CA 6-420

Terasaki Combinations		Sprecher + Schuh Combinations	
Overload Relay	Thermal Setting (A)	KT7 Circuit Breaker	Contactor
CT 7-24	1.0 - 1.6	KTA7-25S-1A	CA 7-9
CT 7-24	1.0 - 1.6	KTA7-25S-1.6A	CA 7-9
CT 7-24	1.6 - 2.4	KTA7-25S-2.5A	CA 7-9
CT 7-24	2.4 - 4.0	KTA7-25H-2.5A	CA 7-9
CT 7-24	2.4 - 4.0	KTA7-25H-4A	CA 7-9
CT 7-24	4.0 - 6.0	KTA7-25H-6.3A	CA 7-9
CT 7-24	6.0 - 10	KTA7-25H-6.3A	CA 7-9
CT 7-24	6.0 - 10	KTA7-25H-10A	CA 7-9
CT 7-24	10 - 16	KTA7-45H-16A	CA 7-12
CT 7-24	10 - 16	KTA7-45H-16A	CA 7-16
CT 7-24	16 - 24	KTA7-45H-20A	CA 7-23
CT 7-45	18 - 30	KTA7-45H-32A	CA 7-30
CT 7-45	30 - 45	KTA7-45H-45A	CA 7-37
CT 7-45	30 - 45	KTA7-45H-45A	CA 7-43
CT 7-75	45 - 60	KTA3-100-63A	CA7-60
CT 7-75	60 - 75	KTA3-100-90A	CA7-72
CT 7-100	70 - 90	KTA3-100-90A	CA7-85
CEF 1-11/12	20 - 180	-	-
CEF 1-11/12	20 - 180	-	-
CEF 1-11/12	20 - 180	-	-
CEF 1-41/42	160 - 400	-	-
CEF 1-41/42	160 - 400	-	-
CEF 1-41/42	160 - 400	-	-
CEF 1-41/42	160 - 400	-	-

Notes:
- Thermal or electronic overload relays may be used.
- XM30PB combinations can be replaced with H125GJ/20 and CA7-30 if required.
- Combinations based on the thermal overload relay tripping before the circuit breaker at overload currents up to the motor locked rotor current.

SECTION 4

APPLICATION DATA

MOTOR STARTING TYPE 2 CO-ORDINATION

Short-Circuit Co-Ordination DOL Motor Starting Table

Type '2'
Terasaki MCCB's & Sprecher + Schuh KT7's
DOL starting 100 kA @ 400/415 V to AS/NZS 60947.4.1

TYPE 2
100 kA

		Terasaki Combinations		Terasaki Combinations		Sprecher + Schuh Combinations	
Motor Size (kW)	Approx. amps @ 400/415 V (A)	MCCB	Contactor	Overload Relay	Thermal Setting (A)	KT7 Circuit Breaker	Contactor
0.37	1.1	H125NJ/20	CA 7-30	CT 7-24	1.0 - 1.6	KTA7-25S-1A	CA 7-9
0.55	1.5	H125NJ/20	CA 7-30	CT 7-24	1.0 - 1.6	KTA7-25S-1.6A	CA 7-9
0.75	1.8	H125NJ/20	CA 7-30	CT 7-24	1.6 - 2.4	KTA7-25S-2.5A	CA 7-9
1.1	2.6	H125NJ/20	CA 7-30	CT 7-24	2.4 - 4.0	KTA7-25H-2.5A	CA 7-9
1.5	3.4	H125NJ/20	CA 7-30	CT 7-24	2.4 - 4.0	KTA7-25H-4A	CA 7-9
2.2	4.8	H125NJ/20	CA 7-30	CT 7-24	4.0 - 6.0	KTA7-25H-6.3A	CA 7-9
3	6.5	H125NJ/20	CA 7-30	CT 7-24	6.0 - 10	KTA7-25H-6.3A	CA 7-9
4	8.2	H125NJ/20	CA 7-30	CT 7-24	6.0 - 10	KTA7-25H-10A	CA 7-9
5.5	11	H125NJ/20	CA 7-30	CT 7-24	10 - 16	KTA7-45H-16A	CA 7-12
7.5	14	H125NJ/20	CA 7-30	CT 7-24	10 - 16	KTA7-45H-16A	CA 7-16
11	21	H125NJ/32	CA 7-30	CT 7-24	16 - 24	KTA7-45H-20A	CA 7-23
15	28	H125NJ/50	CA 7-43	CT 7-45	18 - 30	KTA7-45H-32A	CA 7-30
18.5	34	H125NJ/50	CA 7-43	CT 7-45	30 - 45	KTA7-45H-45A	CA 7-37
22	40	H125NJ/63	CA 7-43	CT 7-45	30 - 45	KTA7-45H-45A	CA 7-43
30	55	H125-NJ/100	CA 7-60	CT 7-75	45 - 60	-	-
37	66	H125-NJ/100	CA 7-72	CT 7-75	60 - 75	-	-
45	80	H125-NJ/125	CA 7-85	CT 7-100	70 - 90	-	-
55	100	H250-NE/160	CA 6-95	CEF 1-11/12	20 - 180	-	-
75	130	H250-NE/250	CA 6-140	CEF 1-11/12	20 - 180	-	-
90	155	H250-NE/250	CA 6-140	CEF 1-11/12	20 - 180	-	-
110	200	H250-NE/250	CA 6-180	CEF 1-41/42	160 - 400	-	-
132	225	H400-NE/400	CA 6-420	CEF 1-41/42	160 - 400	-	-
160	270	H400-NE/400	CA 6-420	CEF 1-41/42	160 - 400	-	-
200	361	H400-NE/400	CA 6-420	CEF 1-41/42	160 - 400	-	-

Notes:
- Thermal or electronic overload relays may be used.
- Combinations based on the thermal overload relay tripping before the circuit breaker at overload currents up to the motor locked rotor current.

SECTION 4

NEW

TERASAKI
Innovators in Protection Technology

TemCurve 6.0

Circuit Breaker Selectivity Applications Software

NHP has released its new updated “TemCurve 6” MCCB selectivity application software. This new version includes many updated features that will make TemCurve 6 a more versatile applications tool compared to previous versions. Device types included in TemCurve 6 are Terasaki MCBs, MCCBs, ACBs. NHP fuses, and generic IEC protection relay curves.

TemCurve 6 also includes:

Circuit line diagrams	Cable fault calculations	TemCurve file sharing
Distribution schematic	Supply fault calculations	Supply voltage options
Catalogue data prints	Time current curves	Motor start applications
Device photos	Peak Let-through curves	User defined curves
Internet update capability	I^2T curves	C/Breaker setting detail
Supply device type options	Exports to AutoCad	A calculator

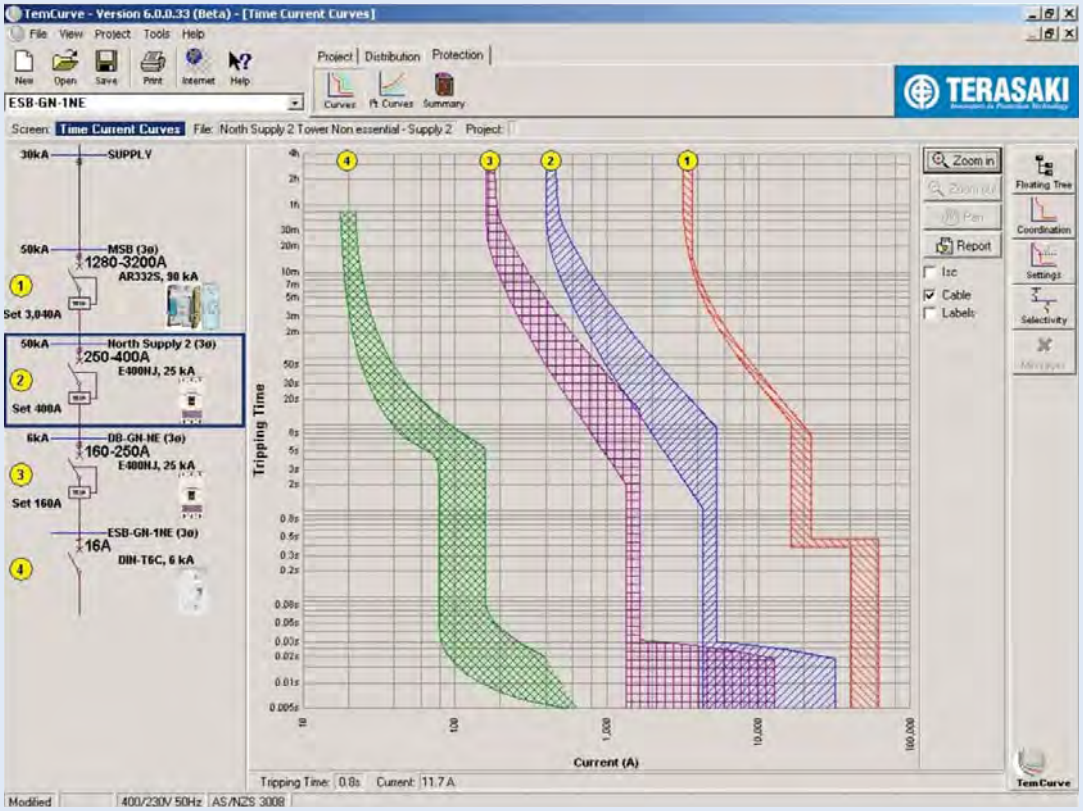

NHP

ACCESSORIES

TEMBREAK 2

MOULDED CASE CIRCUIT BREAKERS 16A TO 630A

1. Welcome to TemBreak 2
2. Ratings and Specifications
3. Operating Characteristics
4. Application Data
5. **Accessories**
   - **Electrical Control (Internal Accessories)** 55
   - **Termination of Control Wiring** 60
   - **Electrical Control (Motorised Operation)** 61
   - **Operating Handles & Locking Devices** 64
   - **Insulation Accessories** 66
   - **Dual Supply Changeover Systems** 69
6. Installation
7. Dimensions

SECTION 5

ACCESSORIES

ELECTRICAL CONTROL USING INTERNALLY MOUNTED ACCESSORIES

Electrical control accessories for TemBreak 2 are designed with the installer in mind. Status and alarm contacts, remote tripping coils and undervoltage
protection coils are of modular design and convenient to use.

(1) (2) (3) (4) (5) (6)

1) Heavy-duty auxiliary switch
2) Heavy-duty alarm switch
3) General-purpose auxiliary switch
4) General-purpose alarm switch
5) Shunt trip
6) Undervoltage trip

- Every accessory fits every MCCB and Switch-Disconnector in the range.
- All accessories are endurance tested to the same level as MCCBs.
- TemBreak 2 internal accessories are easily **field-installable.**
- All accessories are individually packaged and are supplied with fitting instructions.
- Control wiring is terminated on the accessory screw terminal. Alternatively a terminal block which clips to the side of the MCCB is available.

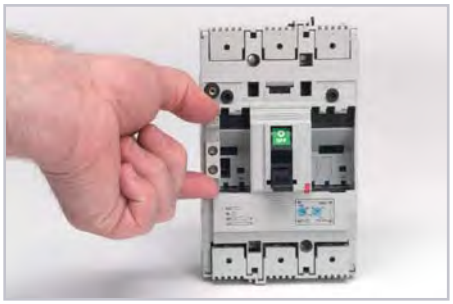

Installing Accessories in a 4 pole S400 model

The internal accessories can be easily installed in the field without special tools or product training.

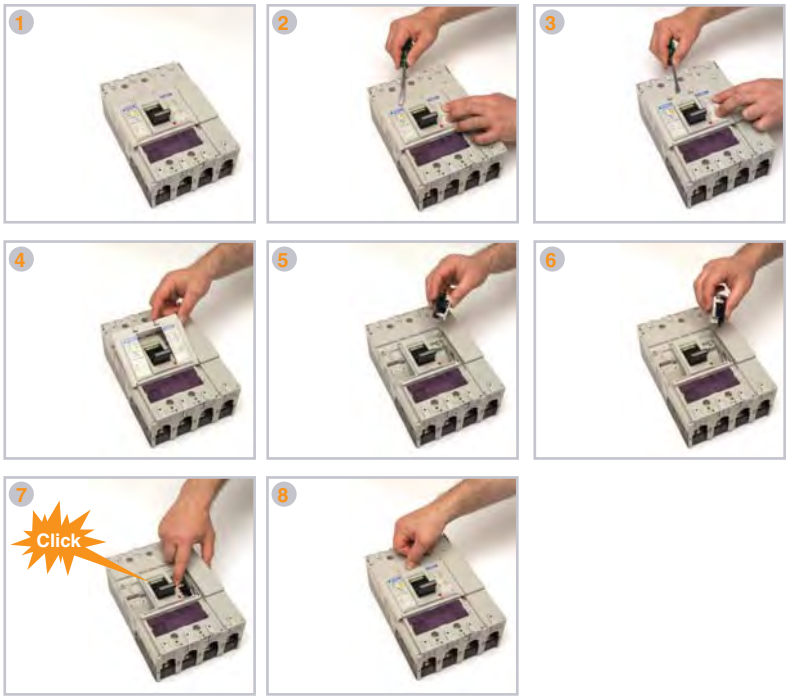

Easy field-Installation of Accessories

- Internal accessory can be simply plugged into position
- No tools are required for this, except a screwdriver to lift the MCCB front cover clips.
- Accessories fit with a firm click when installed correctly.
- Colour coding of accessories helps identification and installation

ACCESSORIES

ELECTRICAL CONTROL USING INTERNALLY MOUNTED ACCESSORIES

Valid Maximum Accessory Combinations

Frame size (A): 125	160 and 250	400 and 630
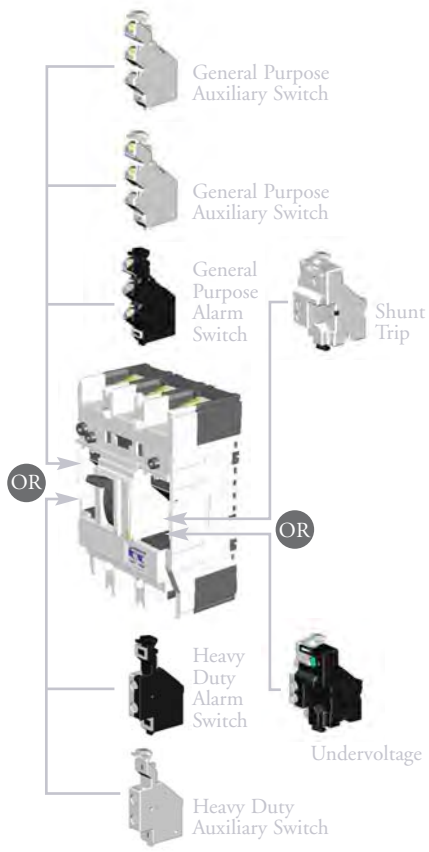	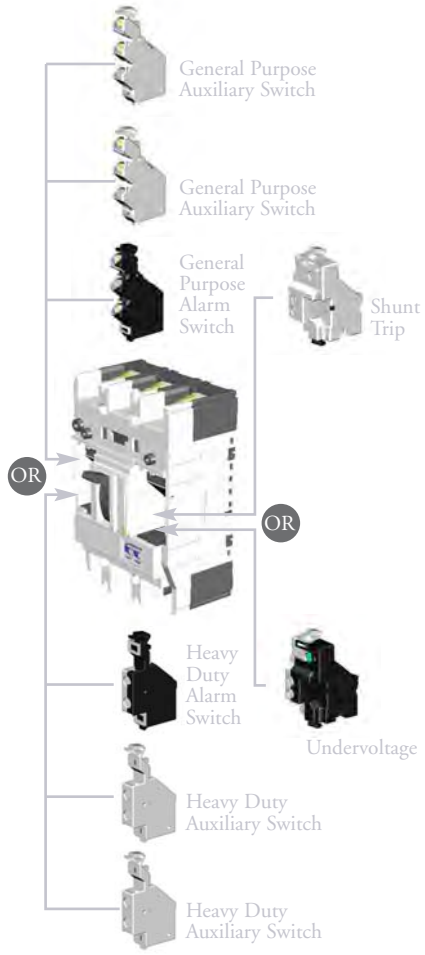	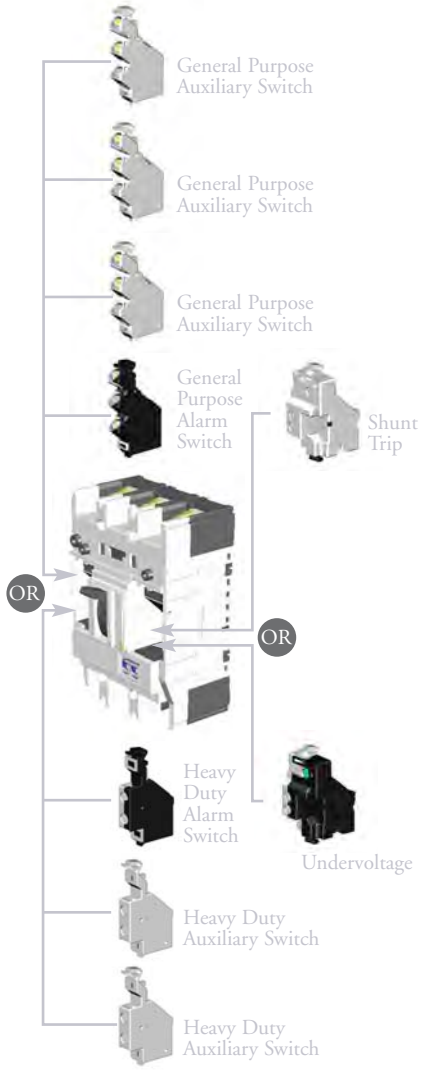

- Status indication switches mount in the left side of the MCCB. *General purpose and heavy duty status indication switches cannot be mixed in the same MCCB. Only one alarm switch can be fitted to an MCCB.*
- Shunt trips and undervoltage trips mount in the right side of the MCCB.
- It is not possible to install a shunt trip and an undervoltage trip in an MCCB as they occupy the same location. Undervoltage trips can provide remote tripping if necessary by wiring a normally closed contact or pushbutton in series with the protected supply.
- Undervoltage trips with time delays require an external time delay controller which clips to the side of the MCCB.

SECTION 5

ACCESSORIES

ELECTRICAL CONTROL USING INTERNALLY MOUNTED ACCESSORIES

Status Indication Switches

General Purpose Auxiliary Switch

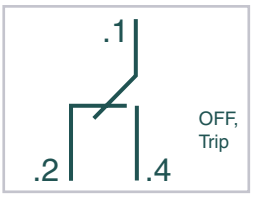

Terminal Designations and Function of General Purpose Auxiliary Switch

General Purpose Auxiliary Switch (AX)

An auxiliary switch electrically indicates the ON or OFF status of the MCCB. The general purpose type is a changeover switch with 3 terminals.

A microcurrent version is available for switching currents as low as 1mA.

Auxiliary switches are colour coded grey. The cable capacity of the terminals is 0.5 to 1.25mm².

The general purpose auxiliary switch meets the requirements of IEC 61058-1.

General Purpose Alarm Switch

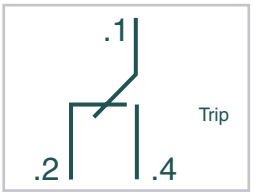

Terminal Designations and Function of General Purpose Alarm Switch

General Purpose Alarm Switch (AL)

An alarm switch electrically indicates the TRIP status of the MCCB. The general purpose type is a changeover switch with 3 terminals.

A microcurrent version is available for switching currents as low as 1mA.

Alarm switches are colour coded grey and black. The cable capacity of the terminals is 0.5 to 1.25mm².

The general purpose alarm switch meets the requirements of IEC 61058-1.

General purpose auxiliaries and alarm switch ratings

Volts (V)	AC Amperes (A) Resistive Load	AC Amperes (A) Inductive Load	Volts (V)	DC Amperes (A) Resistive Load	DC Amperes (A) Inductive Load	Minimum Load
440	-	-	250	-	-	100mA at 15V DC.
240	3	2	125	0.4	0.05	
110	3	2	30	3	2	

Microcurrent versions

DC Volts (V)	DC Amperes (A) Resistive Load	Minimum Load
30	0.1	1mA at 5V DC and 30V DC.

ACCESSORIES

ELECTRICAL CONTROL USING INTERNALLY MOUNTED ACCESSORIES

Status Indication Switches

Heavy Duty Auxiliary Switch

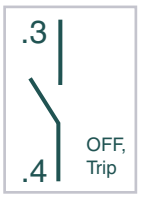

Terminal Designations and Function of Heavy Duty Auxiliary Switch, N/O contact

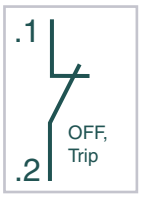

Terminal Designations and Function of Heavy Duty Auxiliary Switch, N/C contact

Heavy Duty Alarm Switch

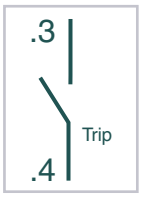

Terminal Designations and Function of Heavy Duty Alarm Switch, N/O contact

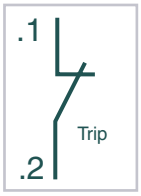

Terminal Designations and Function of Heavy Duty Alarm Switch, N/C contact

Ratings of Heavy Duty Auxiliary and Alarm Switches					
AC			DC		
Volts (V)	Amperes (A)		Volts (V)	Amperes (A)	
	Resistive Load	Inductive Load		Resistive Load	Inductive Load
500	1	1	-		
440	3	3	250	0.5	0.5
240	4	4	125	1	1
110	5	5	48	3	2.5
48	6	6	24	6	2.5

Heavy Duty Auxiliary Switch (AX)

The heavy duty auxiliary switch has an impulse withstand voltage (Uimp) of 6kV and is suitable for isolating safety circuits. The auxiliary switch electrically indicates the ON or OFF status of the MCCB. The heavy duty type is a bridge switch with two terminals. It is available in either normally open or normally closed configurations.

Heavy duty auxiliary switches are colour coded grey. The cable capacity of the terminals is 1.25 to 2.5mm².

The heavy duty auxiliary switch meets the requirements of IEC 60947-5-1.

It has direct opening action, recommended by IEC 60204-1 Safety of Machinery - Electrical Equipment for Machines.

Heavy Duty Alarm Switch (AL)

The heavy duty alarm switch has an impulse withstand voltage (Uimp) of 6kV and is suitable for isolating control circuits. The alarm switch electrically indicates the TRIP status of the MCCB. The heavy duty type is a bridge switch with two terminals. It is available in either normally open or normally closed configurations.

Heavy duty auxiliary switches are colour coded grey and black. The cable capacity of the terminals is 1.25 to 2.5mm².

The heavy duty alarm switch meets the requirements of IEC 60947-5-1.

It has direct opening action, recommended by IEC 60204-1 Safety of Machinery - Electrical Equipment for Machines.

ACCESSORIES

ELECTRICAL CONTROL USING INTERNALLY MOUNTED ACCESSORIES

Remote Tripping Devices

Shunt Trip (SHT)

A shunt trip allows an MCCB to be tripped remotely on the application of the rated coil voltage across the shunt trip terminals. TemBreak 2 shunt trips have **continuously rated coils** and are suitable for use in electrical interlocking applications.

The MCCB contacts and toggle will move to the tripped position when the shunt trip is operated.

The permissible voltage range is 85% to 110% for AC or 75% to 125% for DC.

The cable capacity of the terminals is 0.5 to 1.25mm². Shunt trips are colour coded grey.

Shunt Trips

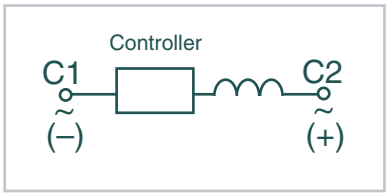

Terminal Designations of Shunt Trips

Ratings of Shunt Trips							
Rated Voltage	Voltage AC			Voltage DC			
	100-120	200-240	380-450	24	48	100-120	200-240
Excitation Current (A)	0.014	0.014	0.0065	0.03	0.03	0.011	0.011

Under Voltage Trip (UVT)

An undervoltage trip will trip the breaker automatically when the voltage applied to the terminals of the undervoltage coil drops to between 70% and 35% of its voltage rating. The undervoltage trip prevents the circuit breaker being closed unless a voltage corresponding to at least 85% of its voltage rating is applied across the terminals of the undervoltage coil.

The MCCB contacts and toggle will move to the tripped position when the under-voltage trip operates.

Undervoltage trips with AC operating voltages are available with 500ms time delays. Time-delay units are fitted to the outside of MCCBs.

The cable capacity of the terminals is 0.5 to 1.25mm². Undervoltage trips are colour coded grey and black.

Undervoltage Trips

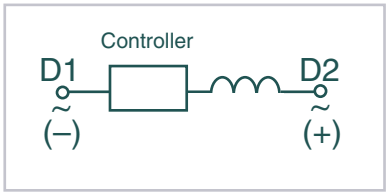

Terminal Designations of Undervoltage Trips

Ratings of Undervoltage Trips						
	Power supply capacity (VA)			Excitation current (mA)		
Rated Voltage	Voltage AC			Voltage DC		
	100-120	200-240	380-450	24	100-120	200-240
Power Supply Capacity (VA)	1.4	1.4	2.28	23	10	10

SECTION 5

ACCESSORIES

TERMINATION OF CONTROL WIRING

Terminal blocks are for optional use with all types of internally mounted accessory.

Terminal Block for Plug-in MCCBs

The terminal block for a plug-in MCCB consists of:

- a male section pre-fitted with 3 cables with which clips easily to the back of the MCCB
- a female section with 3 user terminals which clips easily into the plug-in base.

Up to 4 terminal blocks can be installed on a 125A, 160A or 250A frame MCCB. Up to 5 terminal blocks can be installed on a 400A or 630A frame MCCB.

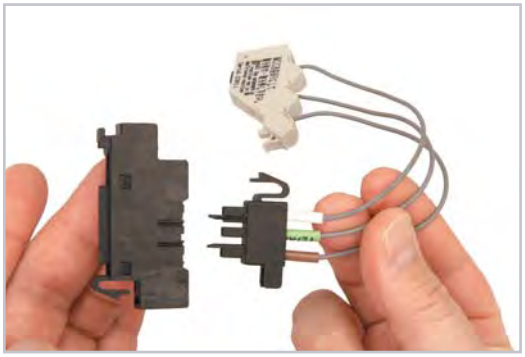

Terminal Block for Plug-in MCCBs

Terminal Block for Front-Connected and Rear-Connected MCCBs (TF)

A terminal block facilitates convenient and accessible control wiring to internally mounted accessories. It allows the use of control wiring cables with larger cross-sectional area than permitted by the internal accessories themselves.

This terminal block can be clipped to either side of the MCCB. If mounted on the left incoming wiring will be fed vertically up to the terminals. If mounted on the right, the incoming wiring will be fed vertically down to the terminals. Terminal blocks are pre-fitted with outgoing wiring which can be terminated directly on each internal accessory.

The maximum incoming cable size to the terminal block is 2.0mm². Terminal blocks have 11 terminals.

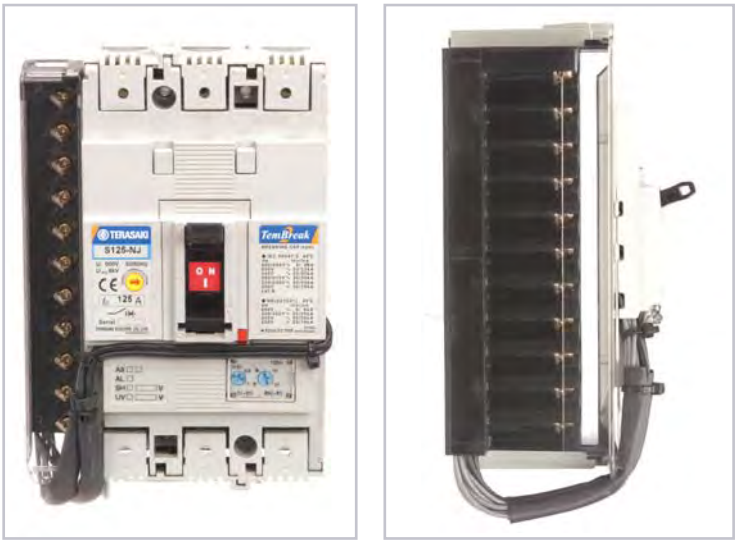

Terminal Block for Front-Connected and Rear-Connected MCCBs

SECTION 5

ACCESSORIES

ELECTRICAL CONTROL USING MOTORISED OPERATION

Overview – Motor Operators (MC)

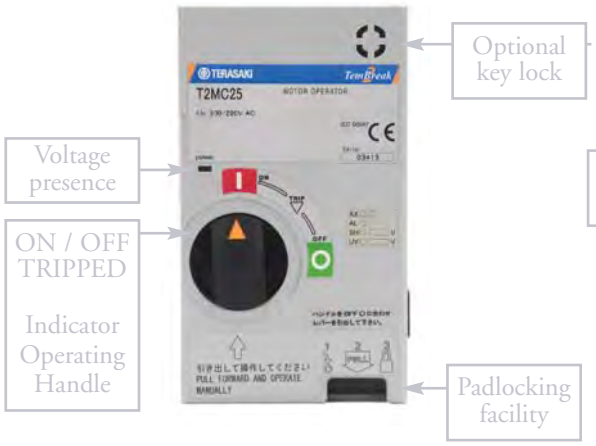

Motor Operator for 125A and 250A Frame MCCB's

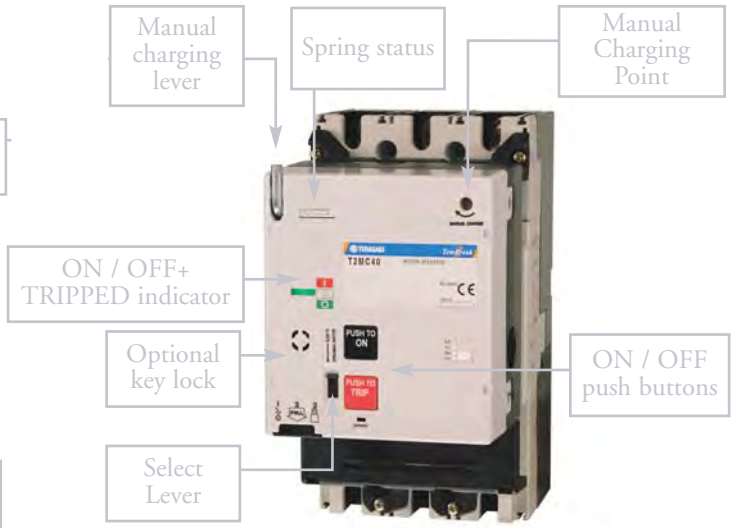

Motor Operator for 400A and 630A Frame MCCB's

Motor operators provide the possibility of opening and closing an MCCB on application of electrical control signals. TemBreak 2 motor operators are extremely reliable, having been designed to endure the same switching duty as the host MCCB.

- Easy field-installation.
- Fast operation (≤100ms).
- Positive contact indication.
- Padlocking facility as standard (Maximum 3, hasp diameter 8mm).
- Optional keylock.
- Versions available with automatic reset function.
- Voltage presence indication.

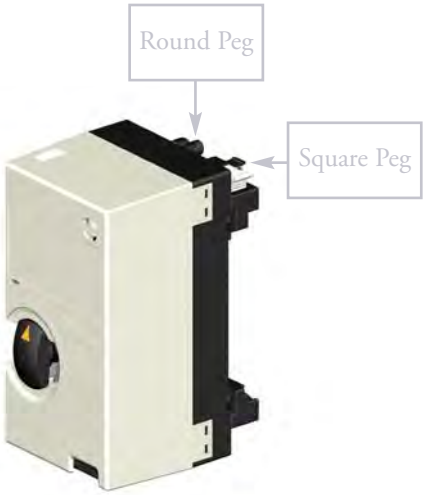

Motor Operator for 125A and 250A frame MCCB's

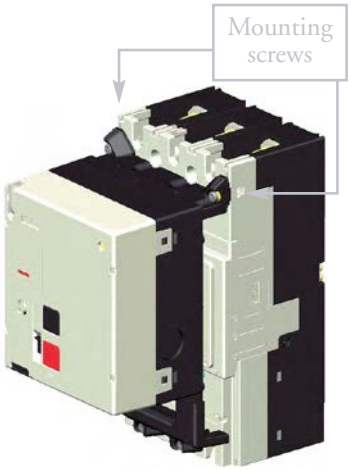

Motor Operator for 400A and 630A frame MCCB's

Motor operators for 125A and 250A frame are mounted on the front of the breaker. They can be rapidly fitted by locating the round pegs and square pegs on the motor into corresponding round and square holes on the breaker. It takes less than 10 seconds to secure the motor to the MCCB.Two levers securely lock the motor into position. No tools are needed to fit the motor operator.

400A frame and 630A frame motor operators are held in place with mounting screws. They can be installed easily in the field.

ACCESSORIES

ELECTRICAL CONTROL USING MOTORISED OPERATION

Indication of ON, OFF or TRIPPED Status

The handle of 125A and 250A frame motor operators has dual functions:

1. Indication of ON, OFF or TRIPPED status as shown in the photographs below;
2. Manual operation when handle is pulled out. The supply to electrical control circuits inside the motor operator is cut when the handle is pulled out.

MCCB on

MCCB off

MCCB tripped

Motor operators for 400A and 630A frame MCCBs incorporate a mechanical flag which indicates the ON, OFF and TRIPPED status of the MCCB. They can be manually charged using the lever provided.

SECTION 5

Ratings and Specifications

Frame size of host MCCB (A)		125, 160, 250	400, 630
Rated operating voltage	100-110 V AC	■	■
	200-220 V AC	■	■
	230-240 V AC	■	■
	24 V DC	■	■
	48 V DC	■	■
	100-110 V DC	■	■
Operating current/ Starting current Peak value (A)	100-110 V AC	3 / 7.8	ON ---/1.9; OFF, RESET 1.4/4.6
	200-220 V AC	1.5 / 4.8	ON ---/3.3; OFF, RESET 1.0/3.8
	230-240 V AC	1.3 / 4.3	ON ---/3.3; OFF, RESET 1.0/3.8
	24 V DC	TBA	TBA
	48 V DC	TBA	TBA
	100-110 V DC	1.3 / 4.3	ON ---/1.3; OFF/RESET 1.2/2.9
Operating method		Direct drive	Spring charging
Operating time (s)	ON	0.1	0.1
	OFF	0.09	1.5
	RESET	0.09	1.5
Operating switch rating	100V, 0.1 A, Opening voltage: 44V, current 4mA		
Power supply required	300 VA minimum		300VA minimum
Dielectric properties (1 min)	1500 V AC (1000V AC for 24V DC and 48V DC motors)		
Weight	1.4 kg		3.5kg

■ = Available

Note: Operating times shown in the above table apply only when the rated operational voltage is supplied to the motor operator. The voltage supplied to the motor operator must be within the range of 85% and 110% of the rated operating voltage.

ACCESSORIES

ELECTRICAL CONTROL USING MOTORISED OPERATION

Motor Operator Control Circuits

MCCB and Motor Operator Showing Control Wiring Socket

Control Wiring Plug

The Control circuits for Motor Operators are connected using a simple plug and socket system.

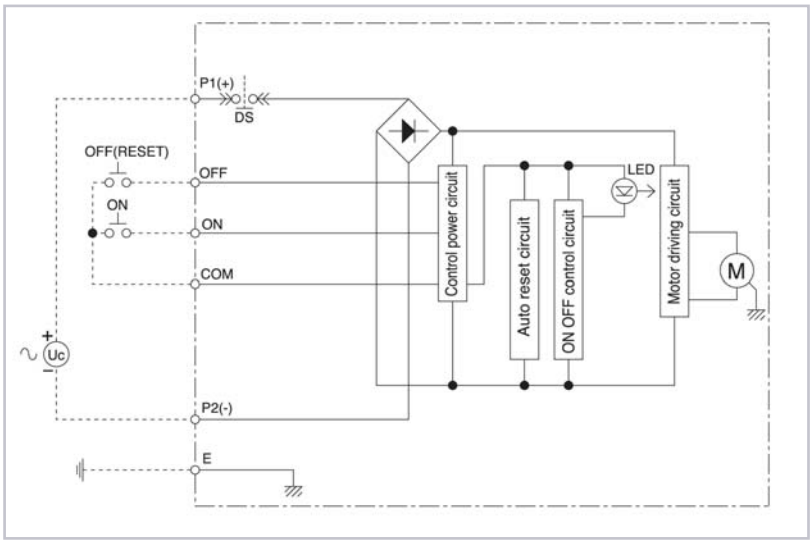

Control circuit for Motor Operators

Operation

The motor operator incorporates a self-hold circuit for the closing and opening signals. Therefore a momentary open or close signal will ensure a complete operation.

When the breaker trips, the breaker is reset by applying a signal to the OFF terminals of the motor.

When a UVT is used with a motor operator, design the control circuit so that the UVT is energised **before** a reset or close signal is sent to the motor operator. A 40ms time delay in the reset and close signals is sufficient to allow the UVT to energise.

When a shunt trip is used with a motor operator, design the control circuit so that the shunt trip is de-energised before a reset or close signal is sent to the motor operator.

When a mechanical interlock is used with motor operators, design the control circuit to provide electrical interlocking between the motor operators. The electrical interlocking should prevent a close signal being sent to a motor operator unless the other motor operator and circuit breaker are in the OFF position.

Auto- reset

Two types of motor operator are available: motor operators without auto-reset and motor operators with auto-reset. The correct type of motor operator should be selected for the application. MCCB auxiliary and alarm switches do not have to be used in the control circuits for motor operators whether they have auto-reset or not, saving cost and space.

ACCESSORIES

OPERATING HANDLES & LOCKING DEVICES

TemBreak 2 handles are extremely reliable, having been designed to endure the same switching duty as the host MCCB.

It is easy to fit the operating unit to the MCCB. Fitting involves three easy steps:

1. Align breaker toggle with operating mechanism
2. Push handle into position (the handle's round pegs locate securely in the breaker's round holes and the handle's* square pegs in the breaker's square holes).
3. Twist locking screws through 45 degrees.*

Safety Features

- Door interlock mechanism with override facility included as standard
- IP54 (door mounted version), IP 54 as standard (breaker mounted version)
- IP65 (door mounted version), IP 65 optional (breaker mounted version)
- Locks OFF with up to 3 padlocks (8mm hasps)
- Optional keylock in OFF position
- Available in black or red and yellow
- A trip test can be performed with the handle fitted to the MCCB

Orientation

To switch the breaker from OFF to ON the handle is rotated through 90 degrees in a clockwise direction.

The ON (I) and OFF (O) indication of the handle can be re-oriented in steps of 90 degrees with respect to the operating mechanism. This allows the indication position to remain the same whether the breaker is mounted vertically (right side up or upside down) or horizontally (on its left side or on its right side). The hole cut-out dimensions for a panel or door will remain unchanged if the handle is re-oriented. The handle's axis of rotation is on the intersection of the centre lines of a 3P MCCB. This means that the positioning of the door cutouts is symmetrical for breakers mounted horizontally on either side of a vertical busbar system.

MCCB ON

MCCB ON

Cubicle Door Cutouts

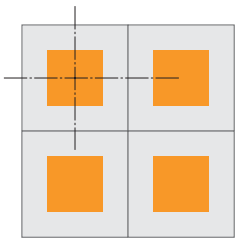

Using TemBreak 2 Operating Handles

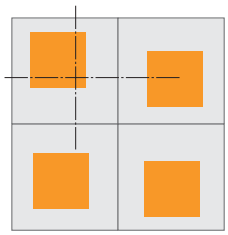

Using other MCCB Operating Handles

*handles for 400A and 630A Frame models are secured with four screws.

ACCESSORIES

OPERATING HANDLES & LOCKING DEVICES

Door Mounted Handle (HP)

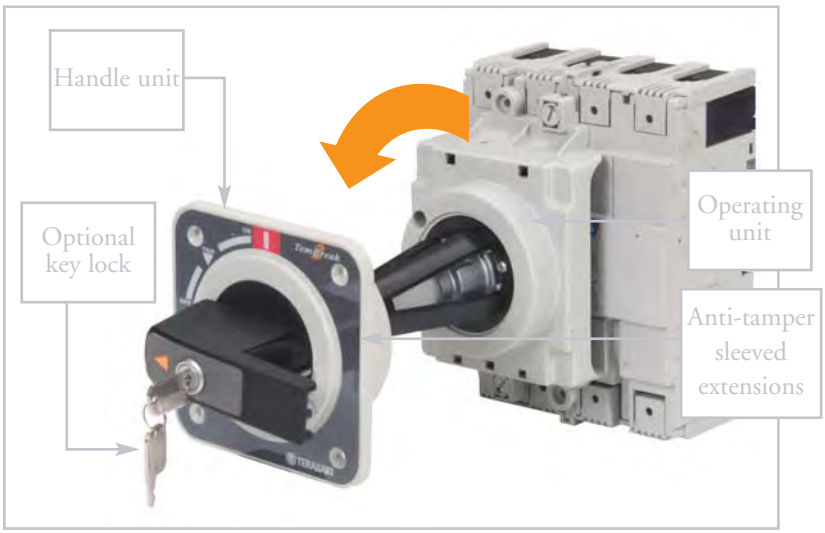

Door Mounted Handle with Optional Keylock

The door mounted operating handle is used to operate a circuit breaker mounted inside a cubicle from outside the door. It consists of an operating mechanism that is mounted on the breaker, an operating handle that is mounted on the door, and a shaft that transmits the turning force from the handle to the operating unit. The shaft can be cut to the required length.

Breaker Mounted Handle (HB)

Breaker Mounted Handle Padlocked in the OFF Position

This handle is used to operate a circuit breaker mounted just behind a compartment door with the door closed. The operating unit and the handle itself are mounted directly onto the circuit breaker. The handle protrudes through a cutout in the door. A moulded door flange is supplied with the handle which covers the cutout from the front.

Padlocking and keylocking is possible in the OFF position or both the ON and OFF position depending on the mounting direction.

Locking Devices

Toggle locking devices allow MCCBs to be locked ON or OFF using up to three padlocks. Locking devices for 125A, 160A and 250A frame models accept padlocks with 5mm hasp diameter. Locking devices for 400A and 630A frame models accept padlocks with 8mm hasp diameter.

S250 Locked OFF

S400 Locked OFF

Fittings for Castell and Fortress locks are available. They are suitable for use on toggle-operated MCCBs, or on door mounted handles (HP) for MCCBs.

ACCESSORIES

INSULATION ACCESSORIES

Terminal Covers

Terminal covers are used to prevent direct contact with live MCCB terminations. They also provide additional insulation to reduce the possibility of a short circuit between phases or to earth when large conductors are used.

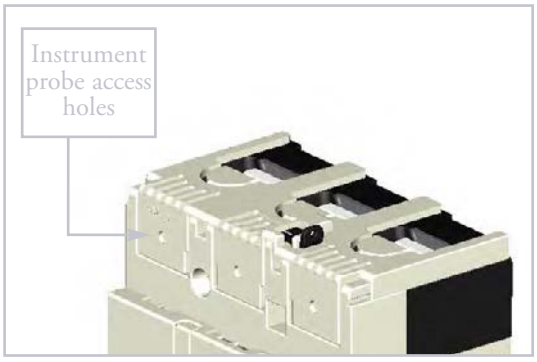

General features

- Terminal covers require no tools for installation
- All terminal covers have an IP20 ingress protection rating
- Terminal covers are ordered individually. Two terminal covers are required to cover both the line and load terminals of an MCCB. Each cover can either be fitted to the top or bottom of the MCCB
- Terminal covers have an instrument probe access hole of 4mm diameter on each phase.

Terminal Cover Lock with Lead Seal

Options

- A terminal cover lock allows an anti-tampering seal to be added.
- An earth barrier can be added to terminal covers for front connection. The earth barrier provides insulation at the rear of the terminations.

Earth Barrier Fitted to Rear of Terminal Cover

SECTION 5

ACCESSORIES

INSULATION ACCESSORIES

Terminal Covers for Front Connection (CF)

Terminal covers for front connection are suitable for covering the exposed live parts of conductors terminated on the MCCB.

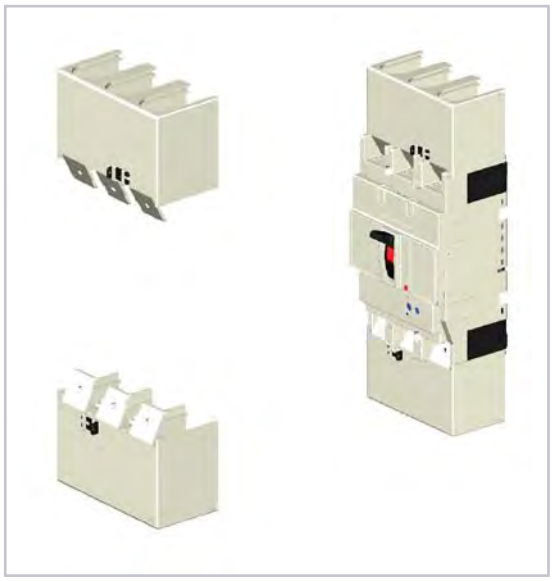

Terminal Covers for Front Connection

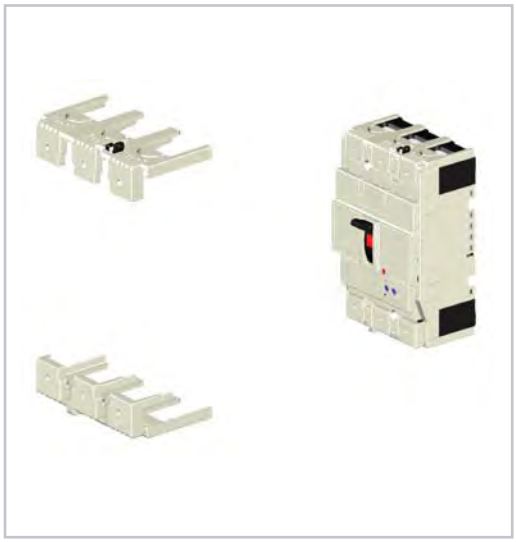

Flush Terminal Covers

Flush Terminal Covers (CS)

Flush terminal covers are useful for increasing the ingress protection rating at the terminals without increasing the overall length. They can be used with busbar and for direct entry of stranded cable (with solderless cable clamp terminals (FW), refer to Section 6, Installation).
Flush terminal covers are identical to rear terminal covers for 400A and 630A frame models.
The user can remove a section of the rear terminal cover using a tool to allow entry of the conductor.

Terminal covers for Rear Connection (CR)

Terminal covers for rear connection may be used on MCCBs fitted with rear connections (RP) or plug-in connections (PM). They prevent access to the terminals from the front and top.

Terminal Covers for Rear Connection

ACCESSORIES

INSULATION ACCESSORIES

Interpole Barriers (BA)

Interpole barriers provide maximum insulation between phases at the terminals of the MCCB. They cannot be fitted at the same time as any of the terminal covers. Interpole barriers for use on one end of the MCCB are supplied as standard. Additional interpole barriers can be ordered individually. All interpole barriers can easily be fitted to either end of an MCCB.

MCCB moulds have been designed to accept an additional interpole barrier between two adjacent MCCBs.

MCCB Fitted with Interpole Barriers on Both Ends

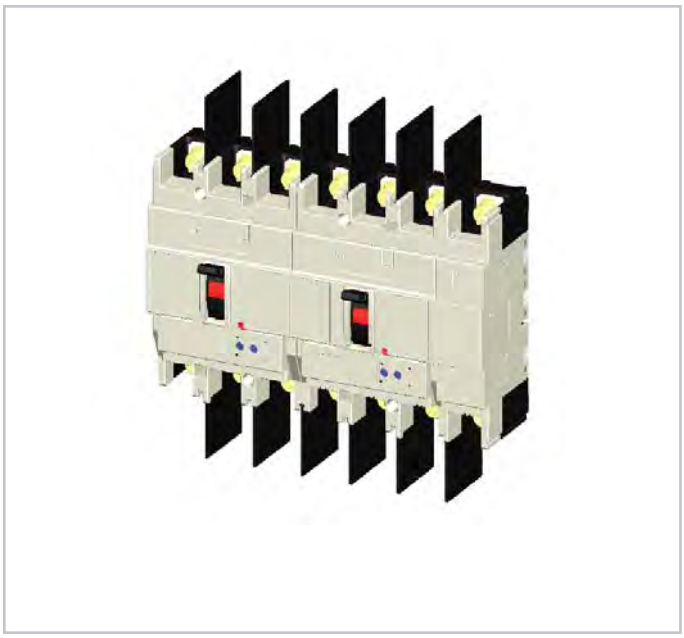

Interpole Barriers between Adjacent MCCBs

ACCESSORIES

ACCESSORIES FOR DUAL SUPPLY CHANGEOVER SYSTEMS

Where more than one AC voltage source is available to a distribution system it is often necessary to prevent multiple sources supplying the system at one time. Interlocking accessories are used together with two MCCBs to prevent both being in the ON state simultaneously. This provides a secure mechanical means of preventing the connection of two supply sources.

An automatic changeover controller can monitor the status of two supplies and control the switching of two MCCBs according to pre-programmed parameters. When an automatic changeover controller is interfaced to a pair of interlocked MCCBs fitted with remote control accessories, a secure, fully automatic changeover system is achieved.

Link Interlock

Changeover Pair with Link Interlock and Motor Operators

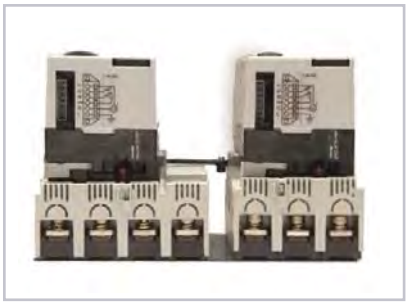

Viewed from Below

Link Interlock (ML)

Link interlocks consist of a mechanism mounted to each MCCB in an adjacently mounted pair. The link between each mechanism inhibits the closure of one MCCB unless the other is in the OFF position.

Link interlocks can be used on a mixture of 3 and 4 pole breakers of the same frame size.

The TemBreak 2 link interlock is an innovative design breakthrough which will save space, time and money for switchboard builders in that:

- Installation is extremely simple. Link interlocks are field-installable and only require a screwdriver to fit.
- Link interlocks replace the accessory cover on the front of the breaker
- Motor operators and operating handles are compatible with link interlocks
- The interlock is installed on the front of the MCCB and does not therefore interfere with copperwork or cables
- No need to buy factory-built backplates with MCCBs and interlocks pre-fitted
- **An automatic changeover pair consisting of an interlocked pair of MCCBs with internal control accessories and motor operators can be assembled in a few minutes!**

ACCESSORIES

ACCESSORIES FOR DUAL SUPPLY CHANGEOVER SYSTEMS

Wire Interlock (MW)

Wire interlocks consist of two mechanisms connected by a cable. The mechanisms are mounted on two MCCBs located at a distance from each other which is limited by the length and bend radius of the cable. The mechanisms and cable inhibit the closure of one MCCB unless the other is in the OFF position. Each mechanism is ordered separately. Cables of 1.0m or 1.5m length are also ordered as separate items.

Wire interlocks can be used on a mixture of 3 and 4 pole MCCBs of different frame sizes. This allows potential cost savings by using lower rated MCCBs for the alternative power supply. MCCBs can be mounted in different switchboard compartment or on different planes.

Changeover Pair with Wire Interlock and Motor Operators

View from above

The TemBreak 2 wire interlock is an innovative design breakthrough which will save space, time and money for switchboard builders in that:

- Installation is extremely simple. Wire interlocks are field-installable.
- Wire interlocks replace the accessory cover on the front of the breaker
- Motor operators and operating handles are compatible with wire interlocks
- Interlocking of MCCBs mounted in different compartments is possible
- No need to buy factory-built backplates with MCCBs and interlocks pre-fitted
- **An automatic changeover pair consisting of an interlocked pair of MCCBs with internal control accessories and motor operators can be assembled in a few minutes!**

Slide Interlock (MS)

Slide interlocks are manually operated toggle locking devices which can be installed between two adjacent MCCBs. Depending on the position of the slide, one or other of the MCCBs on either side of a slide interlock is inhibited from being in the ON position.

Slide interlocks can be used between MCCBs of the same number of poles and of the same frame size.

Slide interlocks can be installed in the field and are padlockable in both positions.

Slide Interlock Installed Between two MCCBs

SECTION 5

MODULAR SIZES

All current ratings up to 630A can be supplied in **2 sizes:** the 250A and 630A sizes.

The compact 125A size offers **the same** features and performance but with reduced dimensions and cost.

INSTALLATION

TEMBREAK 2

MOULDED CASE CIRCUIT BREAKERS 16A TO 630A

1. Welcome to TemBreak 2
2. Ratings and Specifications
3. Operating Characteristics
4. Application Data
5. Accessories
6. **Installation**
   - Connection and Mounting Options and Accessories 75
   - Insulation Distances 80
   - Mounting Angle 82
   - Direction of Power Supply 82
   - Standard Installation Environment and Special Treatments 83
   - Temperature Ratings 84
7. Dimensions

SECTION 6

INSTALLATION

CONNECTION AND MOUNTING OPTIONS AND ACCESSORIES

TemBreak 2 MCCBs connection and mounting accessories facilitate easy installation in any arrangement. Breakers and accessories are easy to fit. They are designed to provide safe and secure termination and mounting points. 125A and 160A/250A frame models have a choice of 45mm front cutout patterns

Optional 45mm Cutout Patterns

Connection and mounting options overview diagram

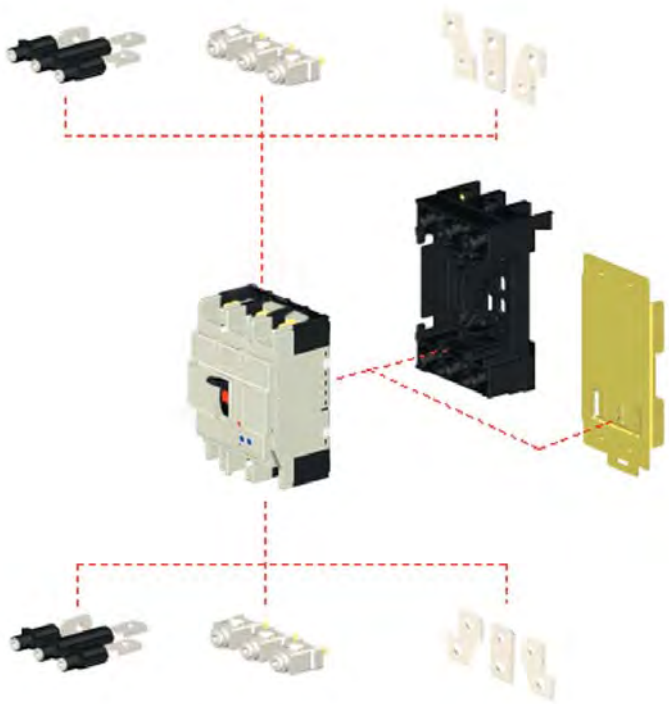

Overview of Connection and Mounting Accessories

Please refer to Section 2, Ratings and Specifications, for details of the connection and mounting options which are available for each model.

Please refer to Section 7, Dimensions, for detailed dimensions of connection and mounting options and accessories.

Note that one set of mounting screws is supplied as standard with every circuit breaker or switch disconnector purchased.

INSTALLATION

CONNECTION AND MOUNTING OPTIONS AND ACCESSORIES

Connection of Busbars and Terminated Cables

This connection method is standard for all **front connected** (FC) MCCB models. Solid conductors or cables terminated with crimp lug terminals can be used.

Serrated Terminal Surface

Each terminal on 160A and 250A models has a serrated surface. This provides excellent grip for heavy cables terminated with crimp lug terminals, thereby preventing sideways rotation of the lug.

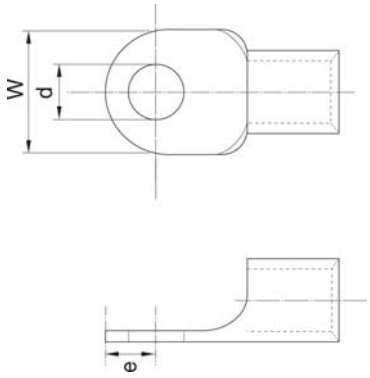

Maximum Dimensions of Compression Terminals			
Frame Size (A)	125*	160 & 250	400 & 630
Width, W (mm)	17	25	25
Diameter, d (mm)	9	9	11
Maximum from centre to tip, e(mm)	8.5	10	12

Connection of Large Conductors and Multiple Conductors

Flat bars (FB) are terminal extensions which can be fitted to line or load side terminals and are used to connect large conductors and multiple conductors. Available for field fitting in sets of 3 or 4 bars.

*H125 and L125 are 250A frame size

INSTALLATION

CONNECTION AND MOUNTING OPTIONS AND ACCESSORIES

Direct Entry of Stranded Cable

Solderless clamp terminals (FW) can be used to secure stranded cable directly to the MCCB. Available for field fitting in sets of 3 or 4.

MCCB Model	Cable Capacity (mm^2)
E125, S125, S125-NF	1.5 to 50 (1 cable)
H125, L125, S160-NF	1.5 to 70 (1 cable)
S160, E250, S250, H250, L250	35 to 120 (1 cable)
E400, S400, H400, L400	80 to 240 (1 cable)
	60 to 120 (2 cables)

Termination in Separate Compartment

Rear connections (RC) allow termination of conductors in a different switchboard compartment to the MCCB body.

The terminal bar can be rotated in steps of 45 degrees in the field.

INSTALLATION

CONNECTION AND MOUNTING OPTIONS AND ACCESSORIES

Plug-in Mounting

The plug in mounting system allows fast replacement of the MCCB body without the need to disturb the terminations. Solid conductors or cables terminated with compression terminals can be used.

Plug-In Safety Lock

The plug-in MCCB body is **automatically locked to the base** when the contacts are closed (toggle ON). It cannot be removed unless the contacts are in the isolated position (toggle OFF or TRIPPED). This system ensures safe removal of the MCCB from the base.

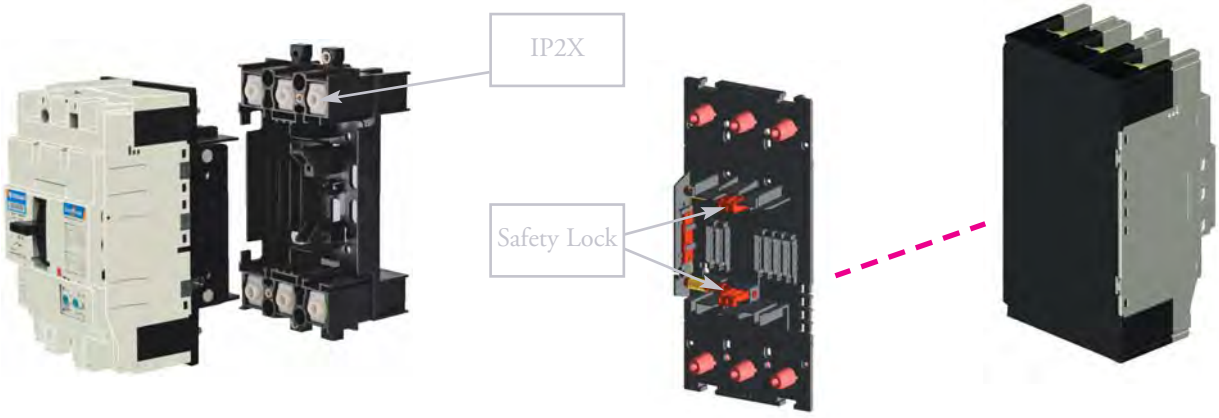

Plug-in MCCB and base

Plug-in connections and safety lock are fitted to the back of the MCCB

The connection bars for plug-in bases are optional and can be configured in the field either for front or rear access. The illustrations below show possible mounting and connection options for plug in bases.

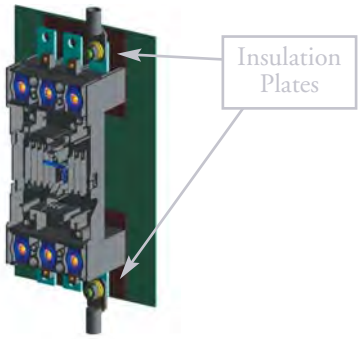

1. Mounted on base plate with connection bars mounted for front access.
   Insulation plates are supplied as standard and must be fitted.

2. Terminations in separate compartment. Connection bars are mounted for top access at the top and rear access at the bottom.

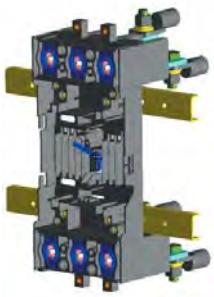

3. Mounted on angle bars. Connection bars are mounted for rear access.

SECTION 6

INSTALLATION

CONNECTION AND MOUNTING OPTIONS AND ACCESSORIES

Mounting on 35mm DIN Rail

The DIN rail adaptor is easily fitted to the rear of 3 pole E125 and S125 models to allow clip mounting of the MCCB to 35mm DIN rail.

The 45mm cutout of TemBreak 2 devices makes them suitable for mounting alongside modular devices in distribution boards.

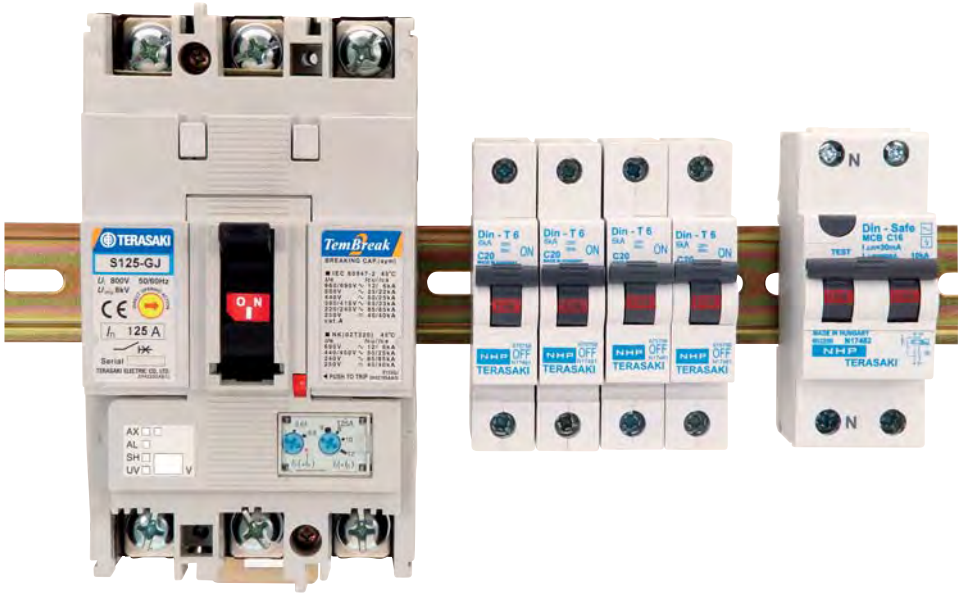

INSTALLATION

INSULATION DISTANCES

The insulation distances between the MCCB and earthed metal parts and insulators shown in this section must be maintained to prevent arcing faults occurring due to conductive ionised gas. In cases where other specifications require different insulation distances to those shown here, the greater distance must be maintained. In cases where two different models are installed one above the other, the insulation distance between the two models should be as for the lower model.

ATTENTION

Exposed conductors must be insulated up to the barrier terminals. Interpole barriers or optional terminal covers are recommended. If optional terminal covers are used, insulate the exposed conductor until it overlaps the terminal cover.

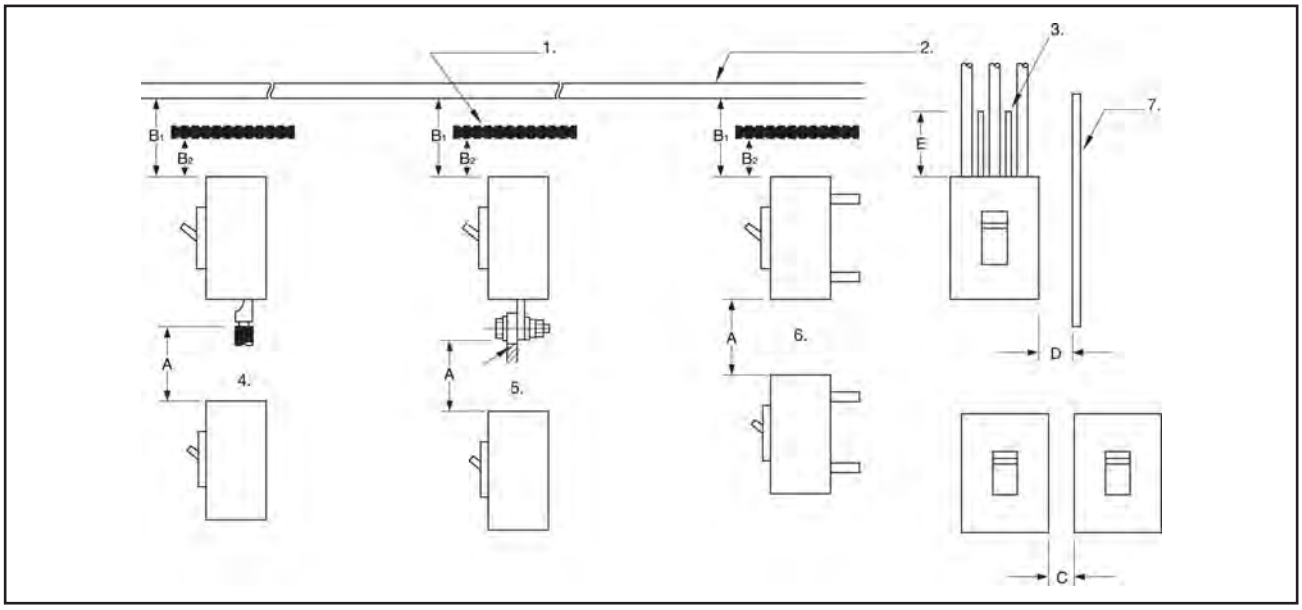

1. Insulation plate
2. Top plate (earthed metal)
3. Insulation tube or tape
4. Front-connected type
5. Front-connected type with terminal bar
6. Rear-connected type, plug-in type
7. Side panel
8. **A.** Distance from lower breaker to exposed live part of upper breaker terminal (front-connected type) or distance from lower breaker to end face of upper breaker (rear-connected type or plug-in type)

   B1. Distance from end face of breaker to top plate

   B2. Distance from end face of breaker to insulation plate

   C. Gap between breakers

   D. Distance from side of breaker to side panel (earthed metal)

   E. Dimensions of insulation over exposed conductors

SECTION 6

INSTALLATION

INSULATION DISTANCE IN mm (AT 440V AC MAXIMUM)

Model	Type	A	B1	B2	C	D	E
E125	NJ	50	10	10	0	25	*(1)
S125	NF	50	10	10	0	25	*(1)
S125	NJ	50	10	10	0	25	*(1)
S125	GJ	75	45	25	0	25	*(1)
H125	NJ	100	80	60	0	50	*(1)
L125	NJ	100	80	60	0	50	*(1)
S160	NF	50	40	30	0	25	*(1)
S160	NJ	50	40	30	0	25	*(1)
S160	GJ	100	80	30	0	50	*(1)
H160	NJ	100	80	60	0	50	*(1)
L160	NJ	100	80	60	0	50	*(1)
E250	NJ	50	40	30	0	25	*(1)
S250	NJ	50	40	30	0	25	*(1)
S250	GJ	100	80	30	0	25	*(1)
S250	PE	100	80	60	0	50	*(1)
H250	NJ	100	80	60	0	50	*(1)
H250	NE	100	80	60	0	50	*(1)
L250	NJ	100	80	60	0	50	*(1)
E400	NJ	100	80	40	0	30	*(1)
S400	CJ	100	80	40	0	30	*(1)
S400	NJ	100	80	40	0	30	*(1)
S400	GJ	100	80	40	0	30	*(1)
S400	GE	100	80	40	0	30	*(1)
H400	NJ	120	120	80	0	80	*(1)
H400	NE	120	120	80	0	80	*(1)
L400	NJ	120	120	80	0	80	*(1)
L400	NE	120	120	80	0	80	*(1)
E630	NE	120	100	80	0	80	*(1)
S630	CE	120	100	80	0	80	*(1)
S630	GE	120	100	80	0	80	*(1)

***Note:** (1) Insulate the exposed conductor until it overlaps the moulded case at the terminal, or the terminal cover.

INSTALLATION

MOUNTING ANGLE

TemBreak 2 MCCBs may be mounted at any angle without affecting performance.

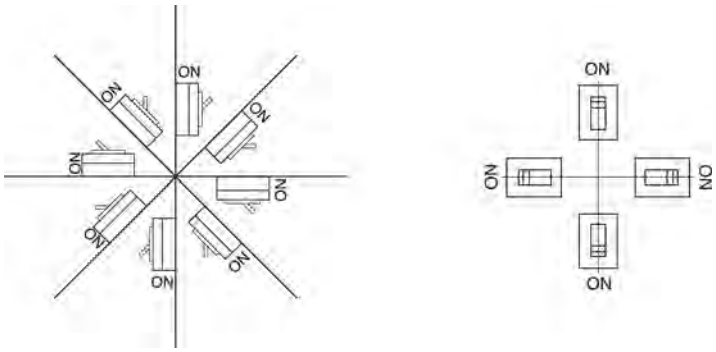

Mounting angle does not affect performance.

DIRECTION OF POWER SUPPLY

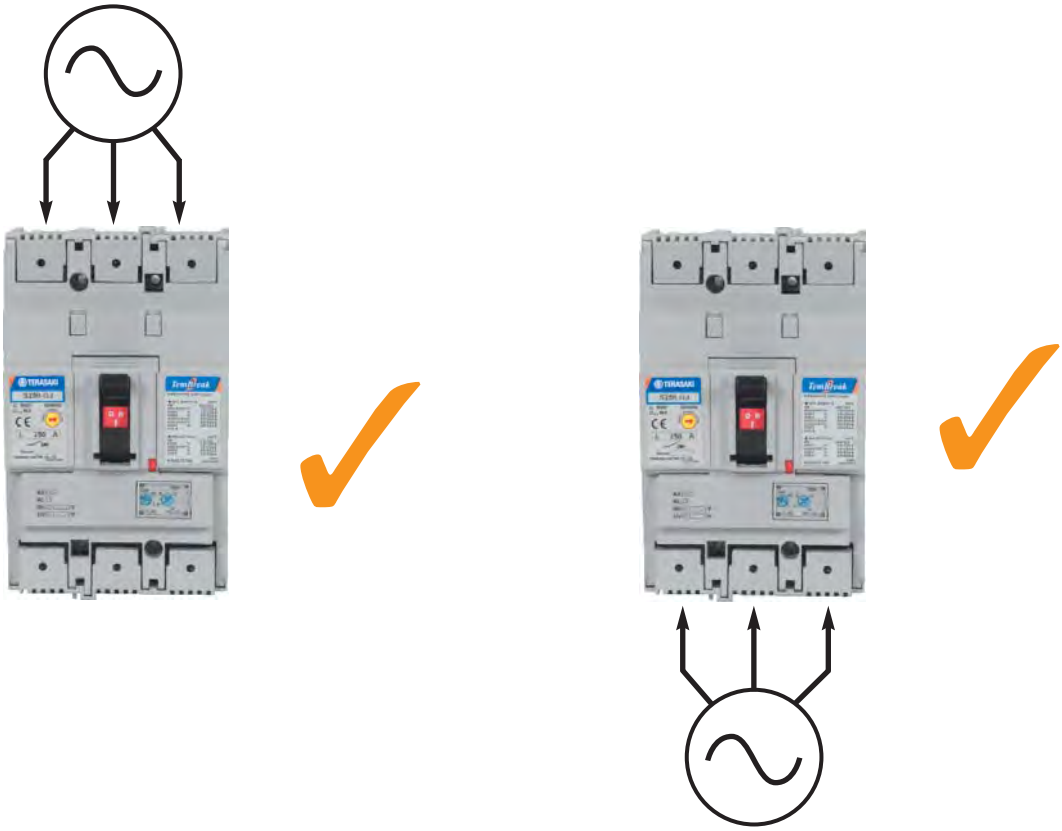

Power can be supplied through TemBreak 2 MCCBs in either direction without loss of performance.

INSTALLATION

STANDARD INSTALLATION ENVIRONMENT AND SPECIAL TREATMENTS

TemBreak 2 MCCBs are intended for installation in the following conditions as standard:

- Operating ambient temperature -5 degrees C to 45 degrees C. Refer to page 84 for thermal derating information above this temperature.
- Relative humidity of up to 85%.
- Altitude up to 2000m.
- Atmospheres free from dust, smoke, corrosive gases, inflammable gases, moisture and salt.

For installation in conditions more onerous than those described above, contact Terasaki for details.

The following special treatments have been developed for installation in specific environmental conditions:

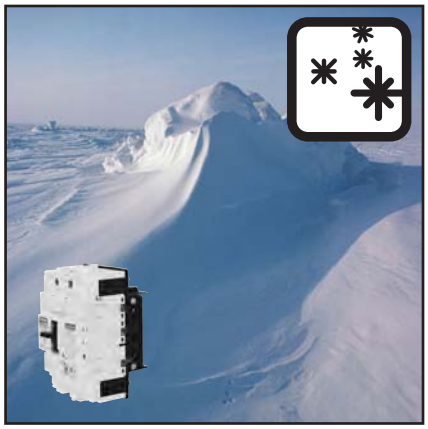

- Low temperature treatment. For installation at temperatures down to -40 degrees C for storage and -20 degrees C for operation. The environment must be free from rapid changes in temperature that result in the formation of condensation.

- Tropicalisation treatment. For installation at temperatures up to 65 degrees C and relative humidity of up to 95%. The environment must be free from rapid changes in temperature.

- Anti-corrosion treatment. MCCB is surface treated to increase resistance to corrosion.
  If the MCCB is to be installed in atmosphere that contains excessive volumes of corrosive gases or moisture, it should be house in an airtight enclosure.

INSTALLATION

TEMPERATURE RATINGS & DERATINGS

Calibration Temperature: 45°C

MCCB Type	Connection Type	Rating at calibration temperature (50°C)	Rated Current (A)			
			50°C	55°C	60°C	65°C
E125-NJ S125-NJ S125-GJ	Front Rear Plug-in	20A	19	18.5	18	17.5
		32A	31	30.5	30	29
		50A	48	45	43	41
		63A	60	57	55	52
		100A	97	94	90	87
		125A	121	117	113	109
H125-NJ L125-NJ	Front Rear Plug-in	20A	19	18.5	18	17.5
		32A	31	30	29	28
		50A	48	47	45	44
		63A	61	59	57	55
		100A	97	95	92	89
		125A	121	118	114	111
S160-NJ S160-GJ	Front Rear Plug-in	20A	19	18.5	18	17.5
		32A	31	30	29	28
		50A	48	46	44	42
		63A	61	59	57	55
		100A	97	94	91	88
		125A	121	117	113	109
		160A	156	151	146	141
H160-NJ L160-NJ	Front Rear Plug-in	160A	156	151	147	143
E250-NJ	Front Rear Plug-in	20A	19	18.5	18	17.5
		32A	31	30	29	28
		50A	48	46	44	42
		63A	61	59	57	55
		100A	97	94	91	88
		125A	121	117	113	109
E250-NJ S250-NJ S250-GJ	Front Rear Plug-in	160A	156	151	146	141
		250A	243	235	227	219
H250-NJ L250-NJ	Front Rear Plug-in	160A	156	151	147	143
	Front Rear	250A	244	237	230	223
E400-NJ S400-CJ S400-NJ S400-GJ	Front Rear Plug-in	250A	244	237	230	223
		400A	390	380	369	358
H400-NJ L400-NJ	Front Rear Plug-in	250A	243	237	230	223
		400A	390	381	371	361
		250A	243	237	231	224
		400A	392	384	376	368

Calibration Temperature: 30°C

MCCB Type	Connection Type	Rating at calibration temperature (30°C)	Rated Current (A)						
			35°C	40°C	45°C	50°C	55°C	60°C	65°C
H250-NJ L250-NJ	Plug-in Conn.	250A	244	236	225	219	209	200	190

MCCB Type	Connection Type	Rating	Rated Current (A)							
			30°C	35°C	40°C	45°C	50°C	55°C	60°C	65°C
S250-PE H250-NE	Front Rear	250A	250	250	250	250	237.5	225	200	200
	Plug-in	250A	250	237.5	225	225	200	200	157.5	157.5
S400-NE S400-GE	Front Rear Plug-in	250A	250	250	250	250	250	250	225	200
		400A	400	400	400	400	400	380	360	320
H400-NE L400-NE	Front Rear Plug-in	250A	250	250	250	250	250	250	225	200
		400A	400	400	400	400	400	380	360	320
		250A	250	250	250	250	250	250	225	200
		400A	400	400	400	400	400	380	360	320
E630-NE S630-CE S630-GE	Front Rear*	630A	630	630	630	630	598.5	598.5	567	504

SECTION 6

COMPACT CHANGEOVERS

Changeover Pair with Link Interlock and Motor Operators

Viewed from Below (250A frame)

The mechanical interlock is installed on the front of the MCCB, and is compatible with motor operators and handles. An automatic changeover system can be assembled in a few minutes by a switchboard builder or end-user.

DIMENSIONS

TEMBREAK 2

MOULDED CASE CIRCUIT BREAKERS 16A TO 630A

1. Welcome to TemBreak 2
2. Ratings and Specifications
3. Operating Characteristics
4. Application Data
5. Accessories
6. Installation
7. **Dimensions**
   - S125-NF, S160-NF 87
   - E125-NJ, S125-NJ, S125-GJ 88
   - S160-NJ, S160-GJ, E250-NJ, S250-NJ, S250-GJ 90
   - H125-NJ, L125-NJ, H160-NJ, L160-NJ, S250-NE, H250-NJ, H250-NE, L250-NJ 92
   - E400-NJ, S400-CJ, S400-NJ, S400-GJ, S400-NE, S400-GE 94
   - H400-NJ, H400-NE, L40-NJ, L400-NE 96
   - E630-NE, S630-CE, S630-GE 98
   - Operating Handles 100
   - Terminal Covers 105
   - Interpole Barriers 107
   - Terminal Blocks for Front-Connected and Rear-Connected MCCBs 108
   - Slide Interlocks 109
   - Link Interlocks 112
   - Wire Interlocks 114
   - Position of Trip Button 116

SECTION 7

DIMENSIONS

S125-NF, S160-NF

ASL: Arrangement Standard Line
HL: Handle Frame Centre Line

S125-NF Front connected

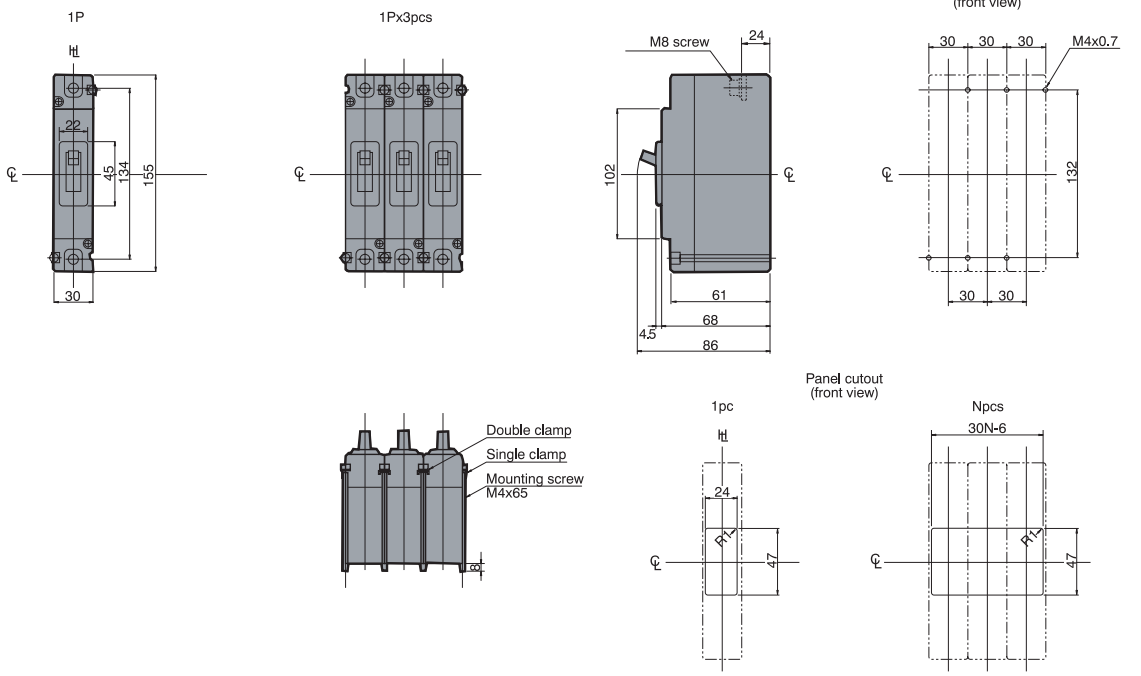

S160-NF Front connected

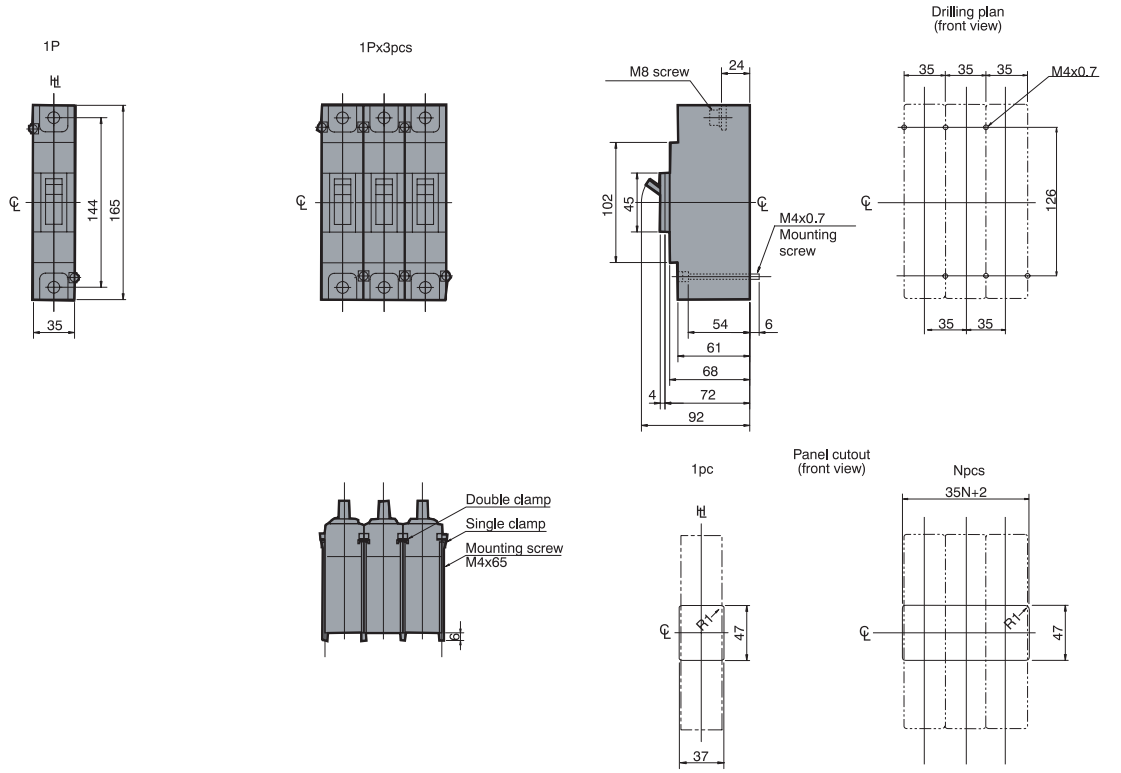

SECTION 7

DIMENSIONS

E125-NJ, S125-NJ, S125-GJ

ASL: Arrangement Standard Line
H : Handle Frame Centre Line

Front connected

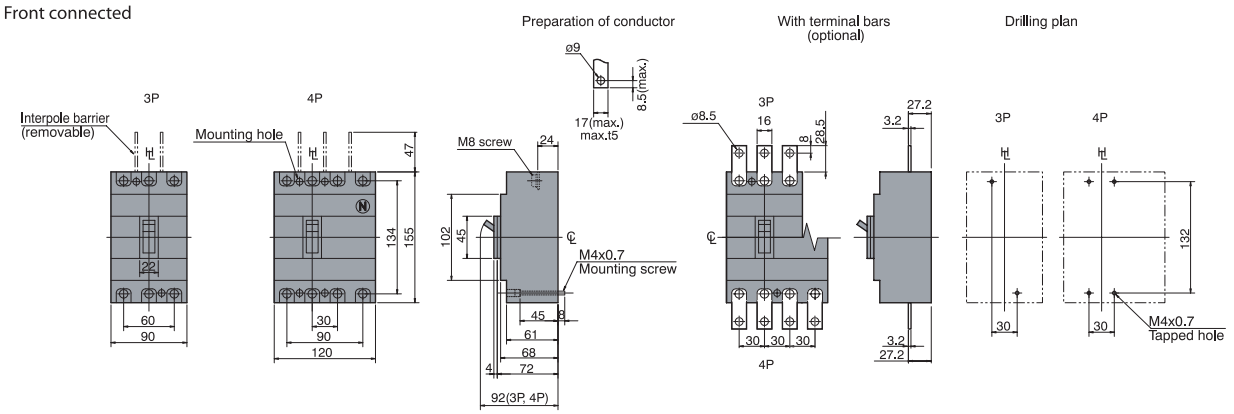

Rear connected

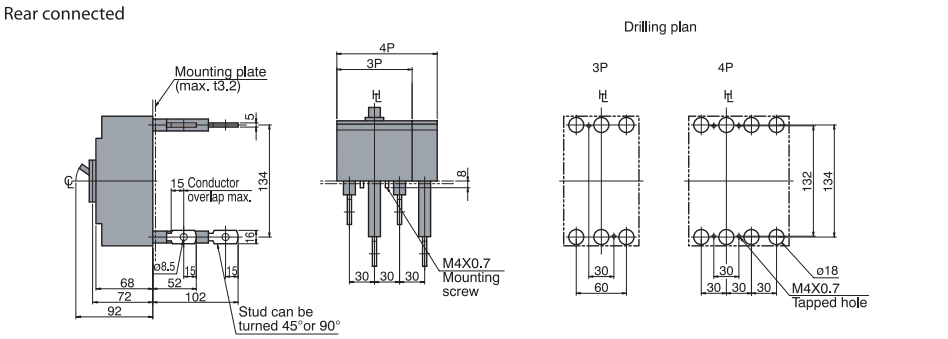

Panel cutout (Front view)

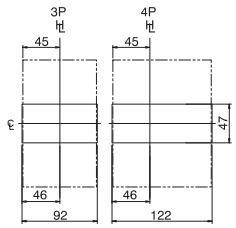

Panel cutout dimensions shown give an allowance of 1.0mm around the handle escutcheon.

Front connected with Motor Operator

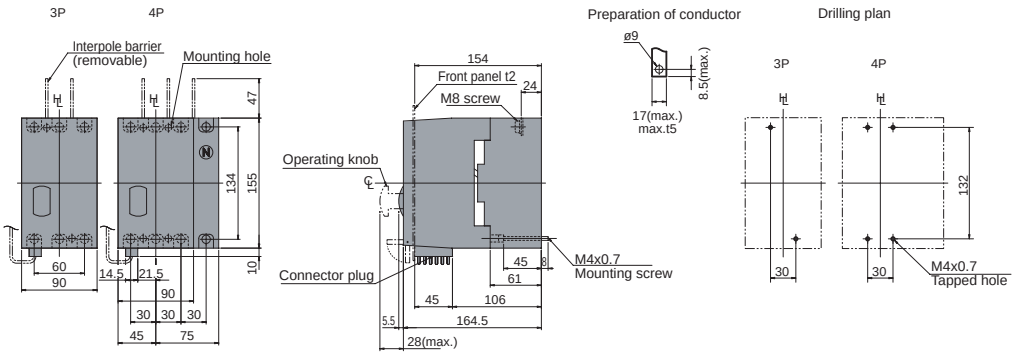

Panel hinge position (hatching area) bottom view

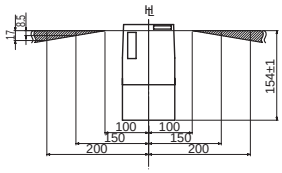

Rear connected with Motor Operator

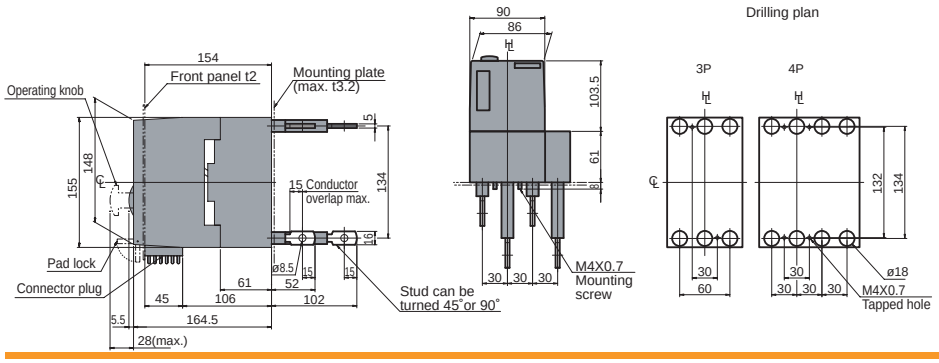

Panel cutout (Front view)

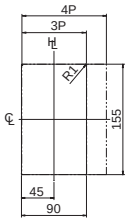

Panel cutout dimensions shown give an allowance of 1.5mm around the handle escutcheon.

SECTION 7

DIMENSIONS

E125-NJ, S125-NJ, S125-GJ. Plug-in Versions

ASL: Arrangement Standard Line
HL: Handle Frame Centre Line

Outline Dimensions

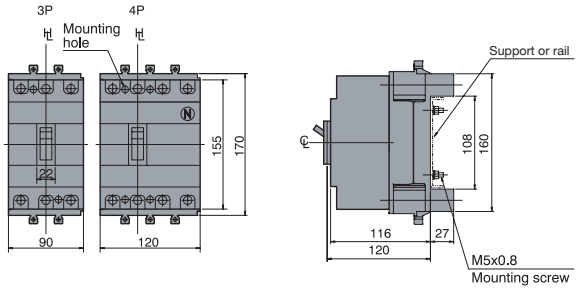

Termination of Busbar

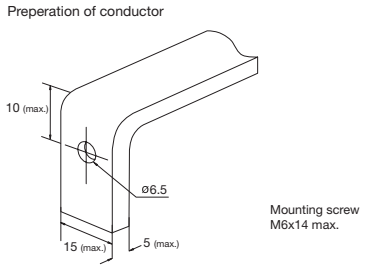

Mounting on a support or rails (shown with optional connection bars oriented for rear access)

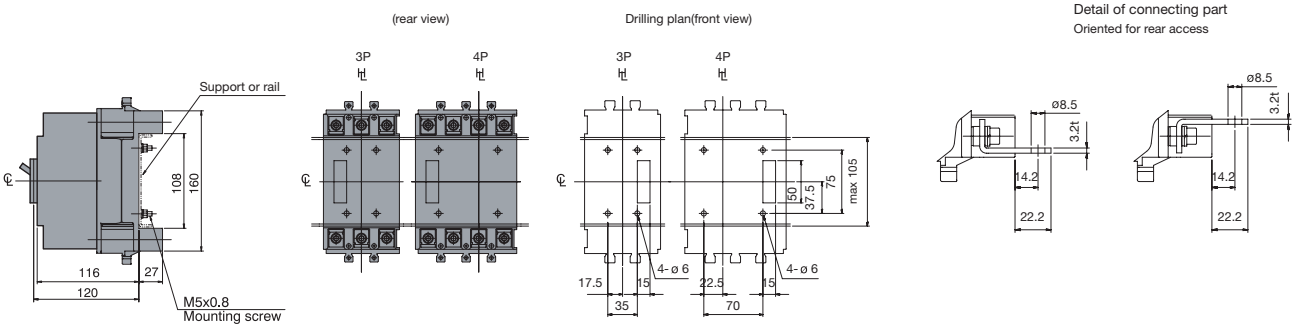

Mounting through the backplate (shown with optional connection bars oriented for rear access)

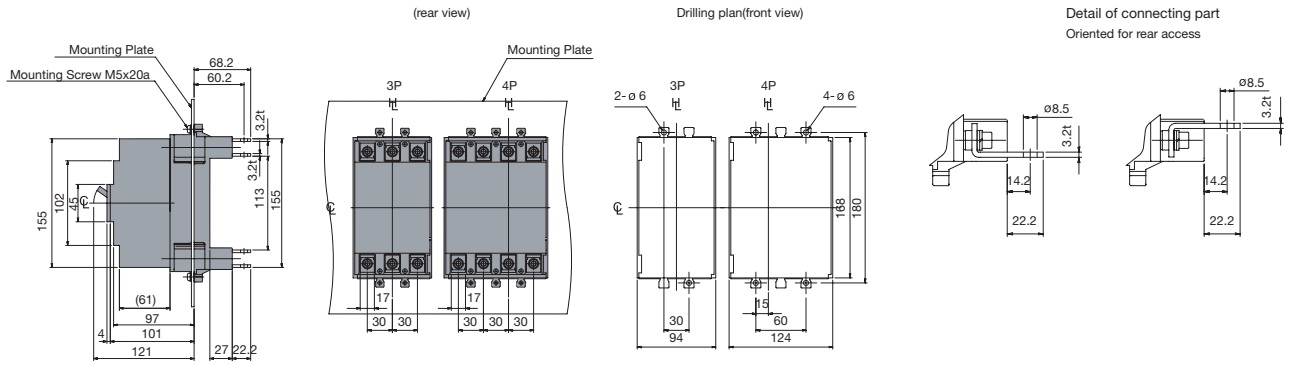

Mounting on the backplate (optional connection bars must be oriented for front access)

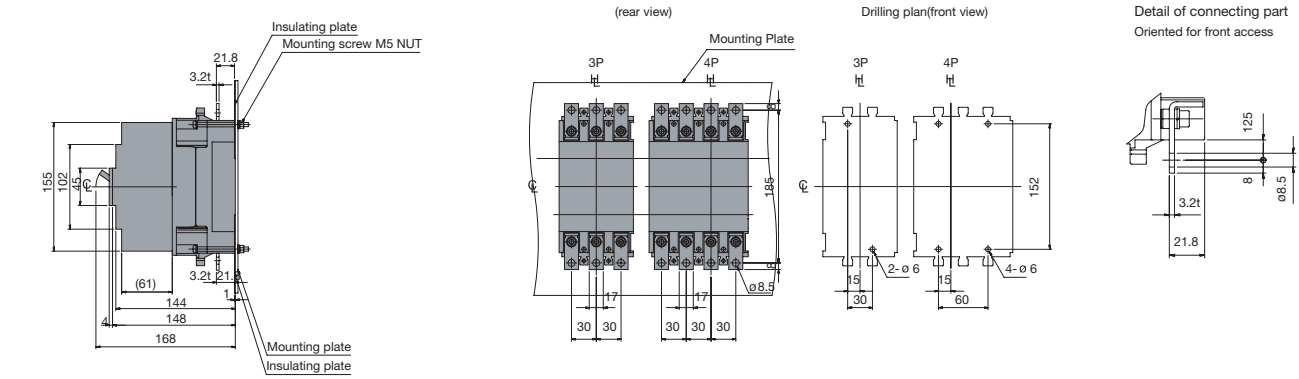

Note that the insulation plate (supplied as standard) must be fitted between the base and the backplate.

SECTION 7

DIMENSIONS

S160-NJ, S160-GJ, E250-NJ, S250-NJ, S250-GJ

ASL: Arrangement Standard Line
HL: Handle Frame Centre Line

Front connected

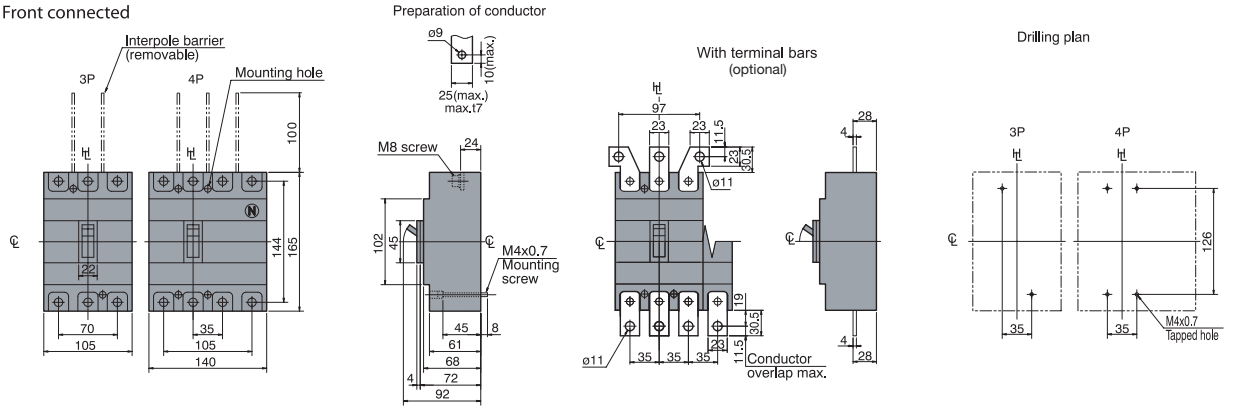

Rear connected

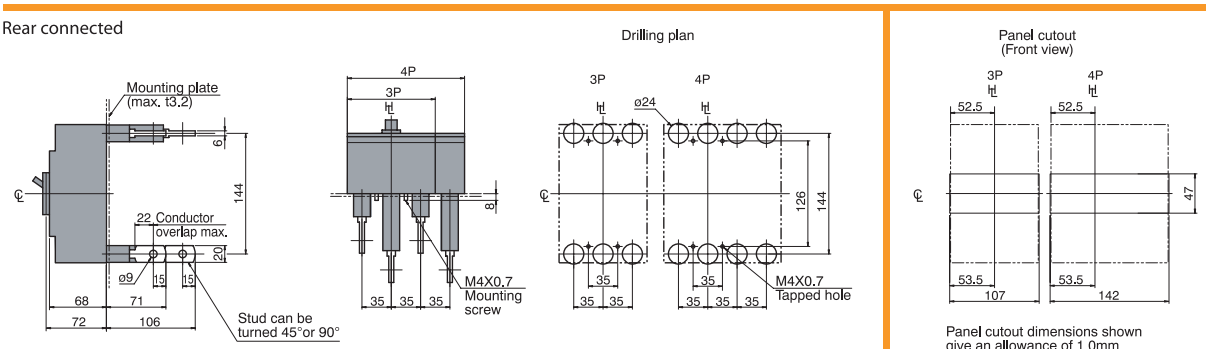

Panel cutout dimensions shown give an allowance of 1.0mm around the handle escutcheon.

Front connected with Motor Operator

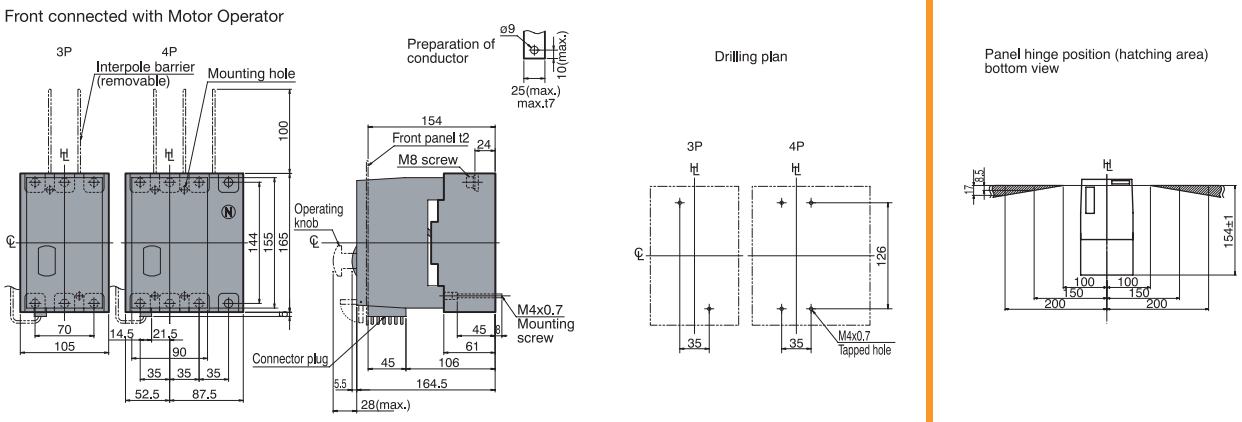

Rear connected with Motor Operator

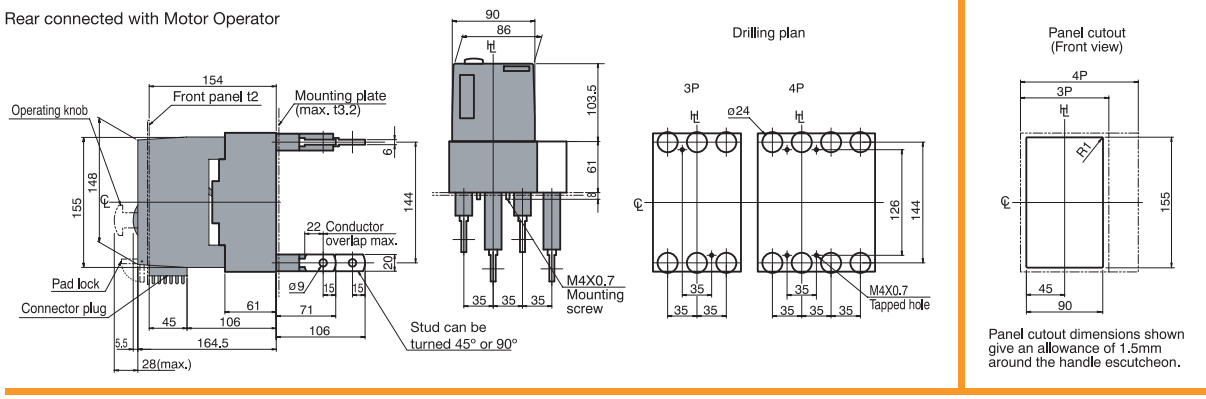

Panel cutout dimensions shown give an allowance of 1.5mm around the handle escutcheon.

SECTION 7

DIMENSIONS

S160-NJ, S160-GJ, E250-NJ, S250-NJ, S250-GJ. Plug-in Versions

ASL: Arrangement Standard Line
HL : Handle Frame Centre Line

Outline Dimensions

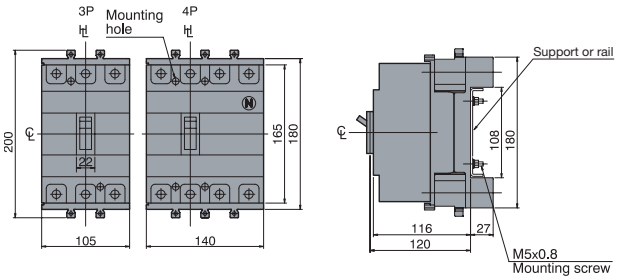

Termination of Busbar

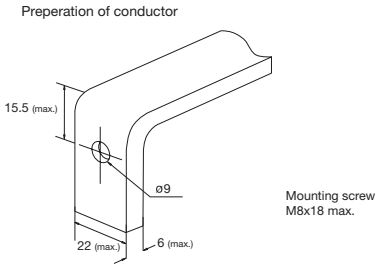

Mounting on a support or rails (shown with optional connection bars oriented for rear access)

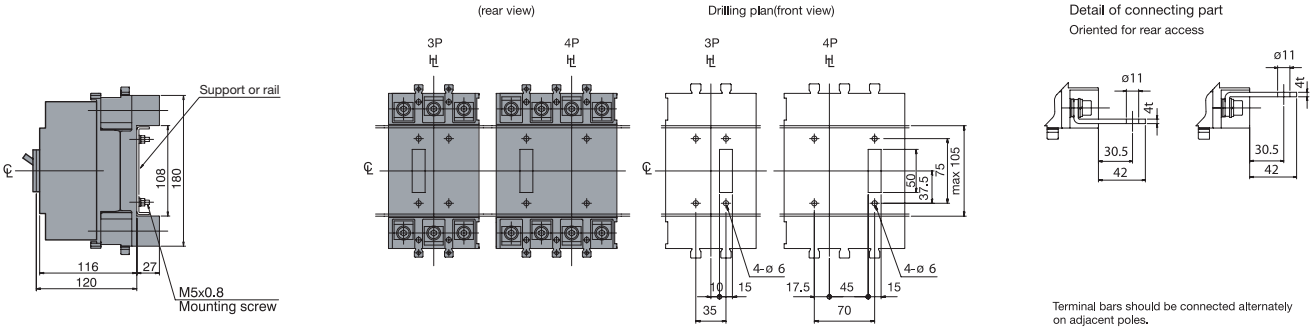

Terminal bars should be connected alternately on adjacent poles.

Mounting through the backplate (shown with optional connection bars oriented for rear access)

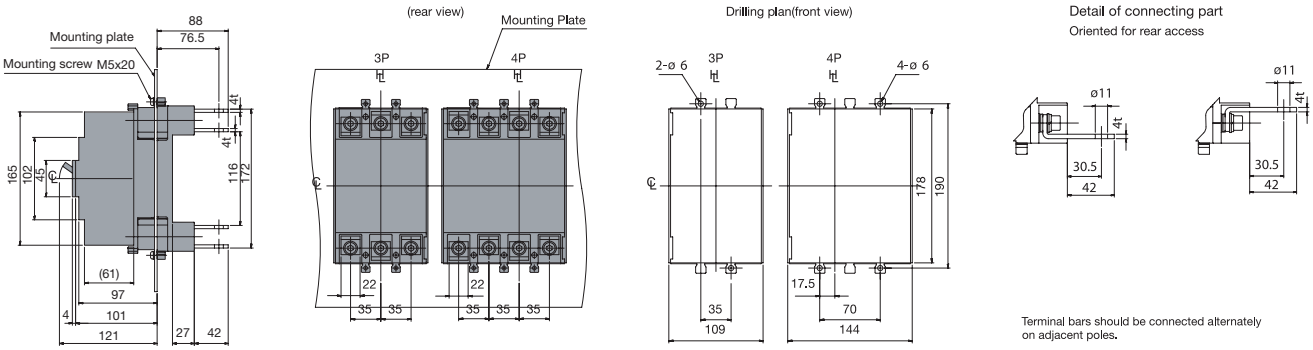

Terminal bars should be connected alternately on adjacent poles.

Mounting on the backplate (optional connection bars must be oriented for front access)

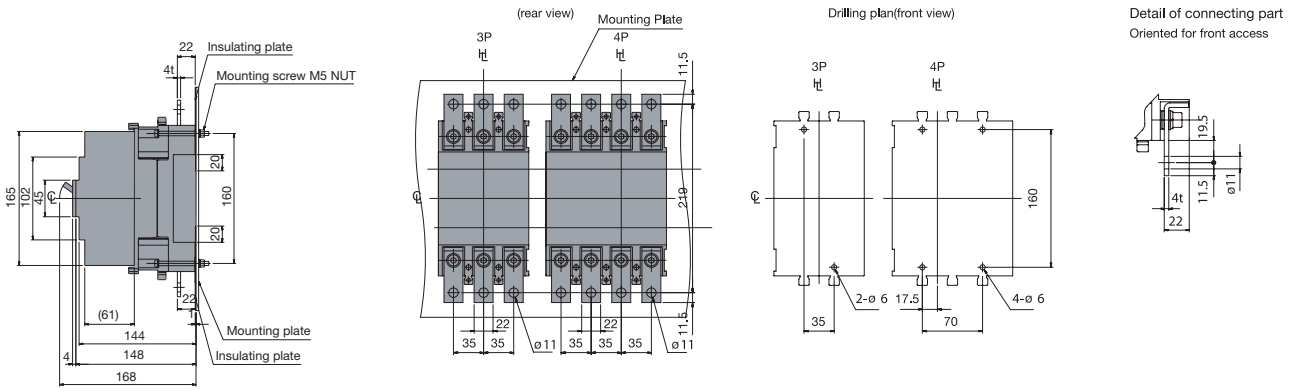

SECTION 7

DIMENSIONS

H125-NJ, L125-NJ, H160-NJ, L160-NJ, S250-NE, H250-NJ, H250-NE, L250-NJ

ASL: Arrangement Standard Line
H : Handle Frame Centre Line

Front connected

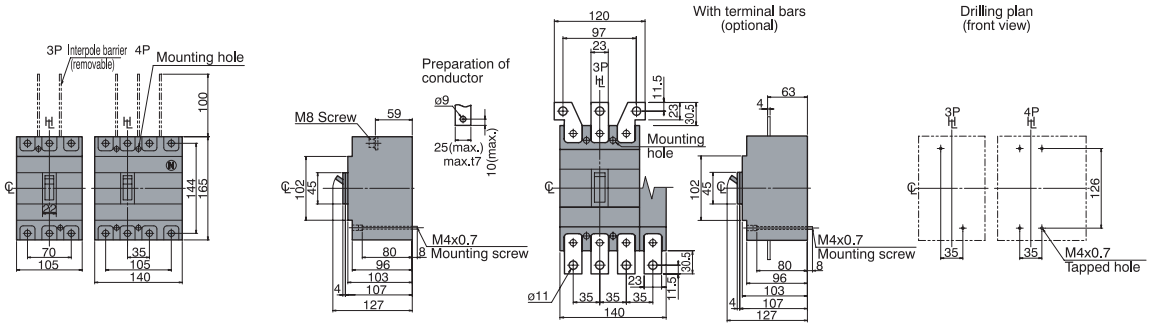

Rear connected

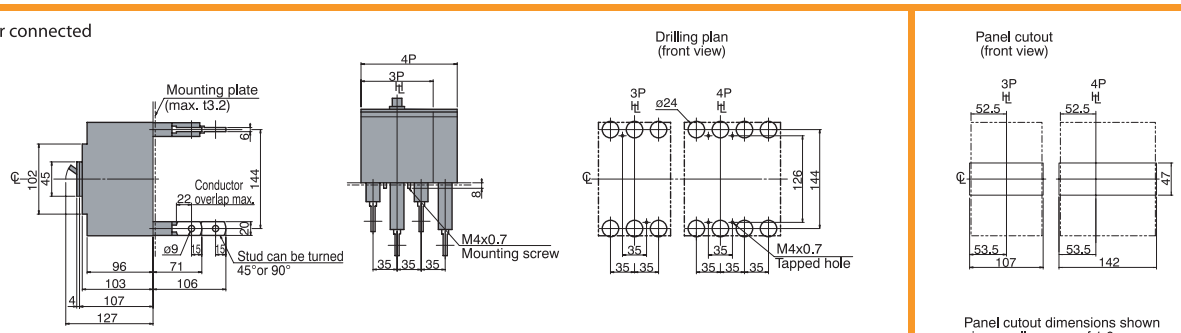

Panel cutout (front view)

Panel cutout dimensions shown give an allowance of 1.0mm around the handle escutcheon.

Front connected with Motor Operator

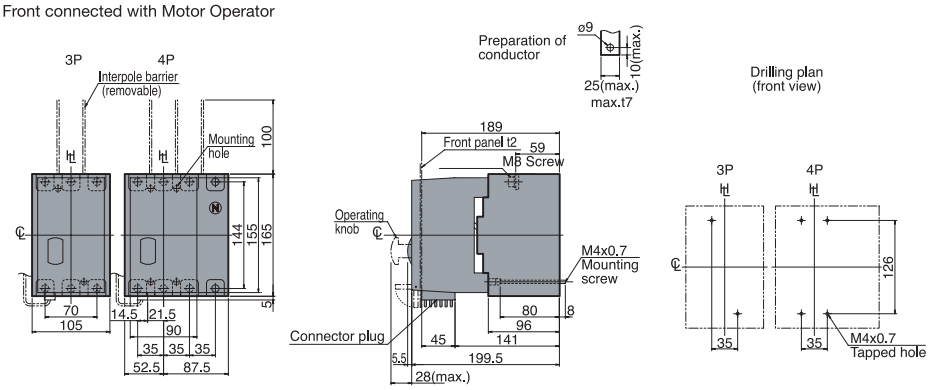

Panel hinge position (hatching area) bottom view

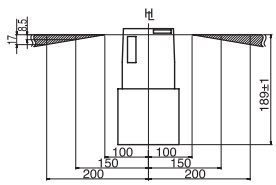

Rear connected with Motor Operator

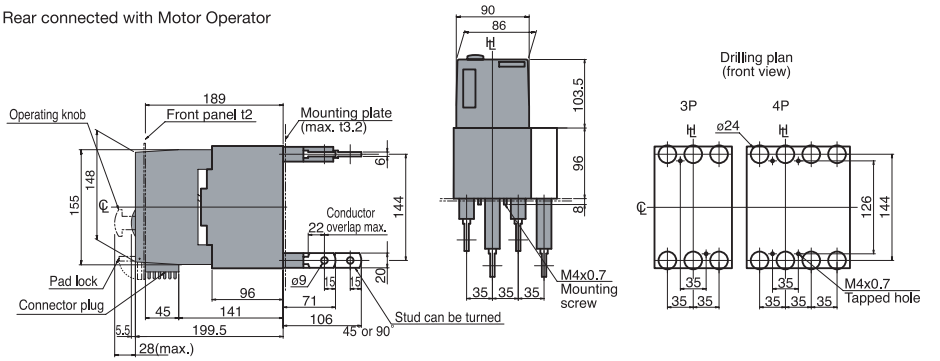

Panel cutout (front view)

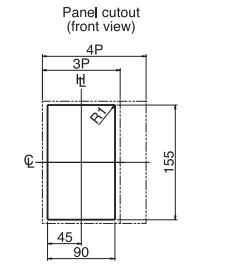

Panel cutout dimensions shown give an allowance of 1.5mm around the handle escutcheon.

SECTION 7

DIMENSIONS

H125-NJ, L125-NJ, H160-NJ, L160-NJ, S250-PE, H250-NJ, H250-NE, L250-NJ. Plug-in Versions

ASL: Arrangement Standard Line
: Handle Frame Centre Line

Outline Dimensions

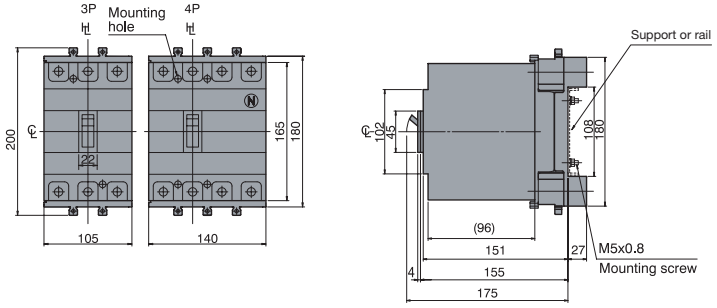

Termination of Busbar

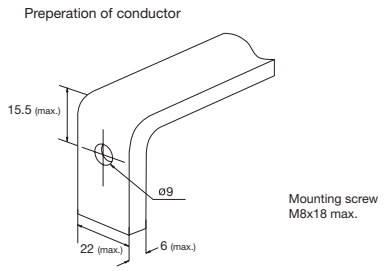

Mounting on a support or rails (shown with optional connection bars oriented for rear access)

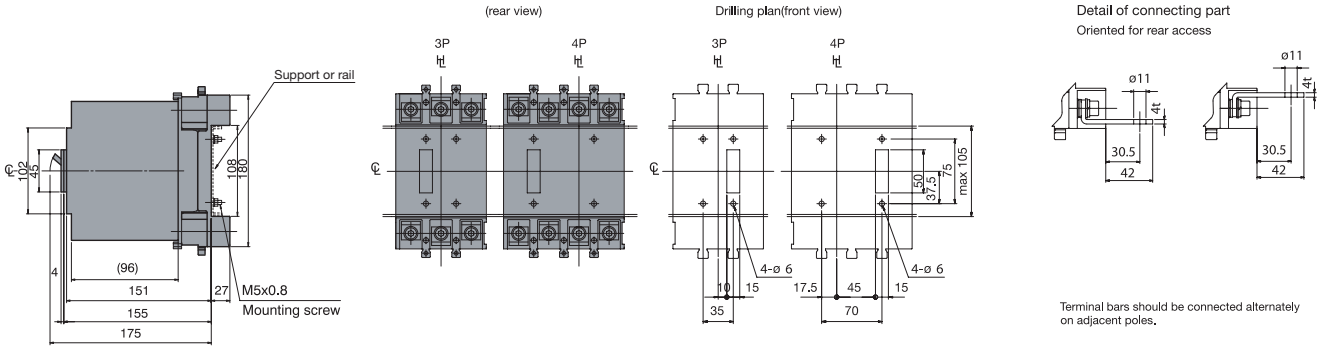

Mounting through the backplate (shown with optional connection bars oriented for rear access)

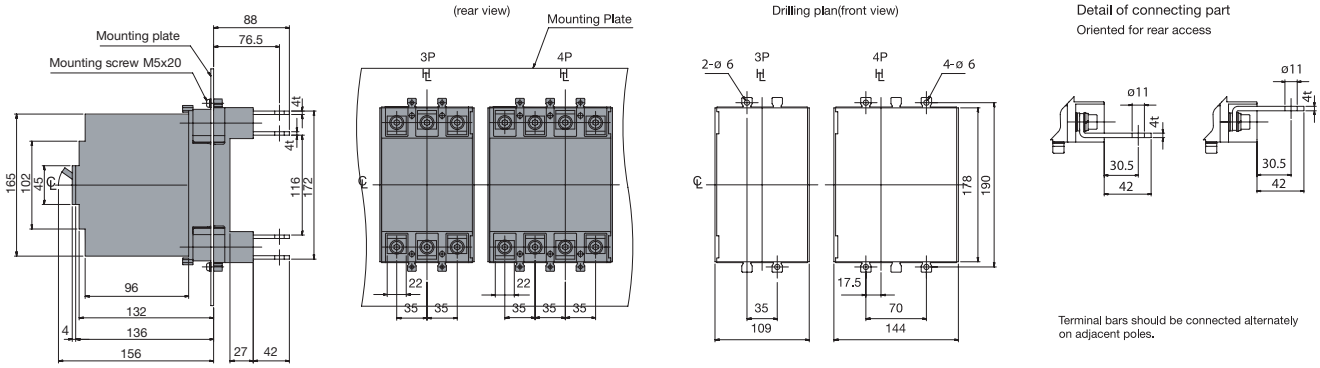

Mounting on the backplate (optional connection bars must be oriented for front access)

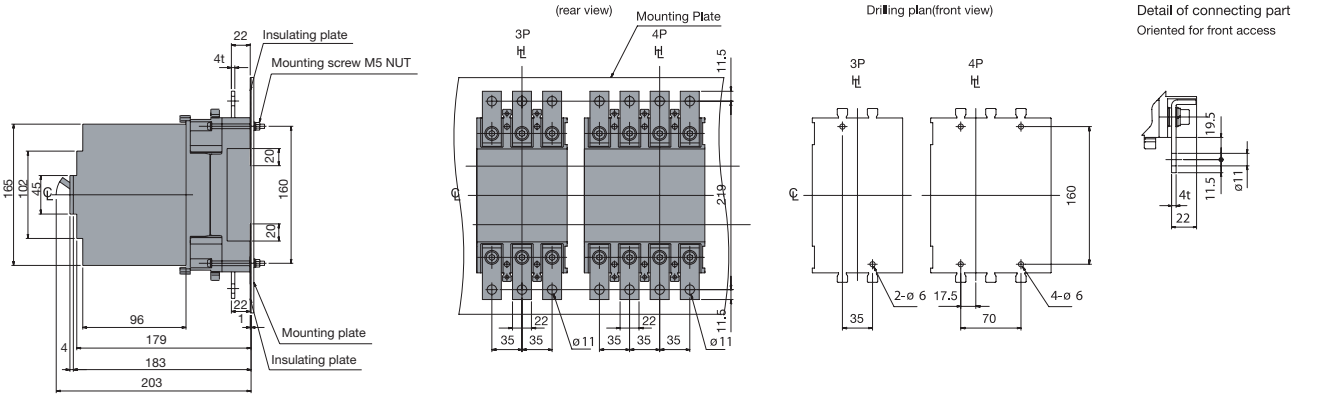

DIMENSIONS

E400-NJ, S400-CJ, S400-NJ, S400-NE, S400-GJ, S400-GE

ASL: Arrangement Standard Line
℄ : Handle Frame Centre Line

Front connected

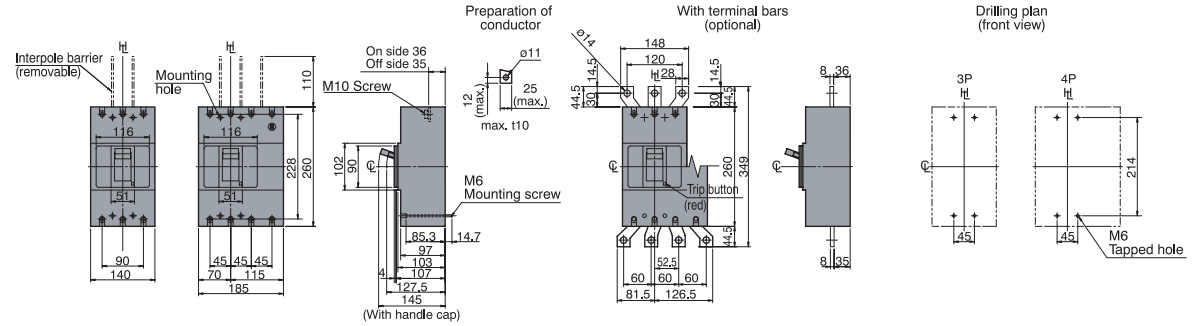

Rear connected

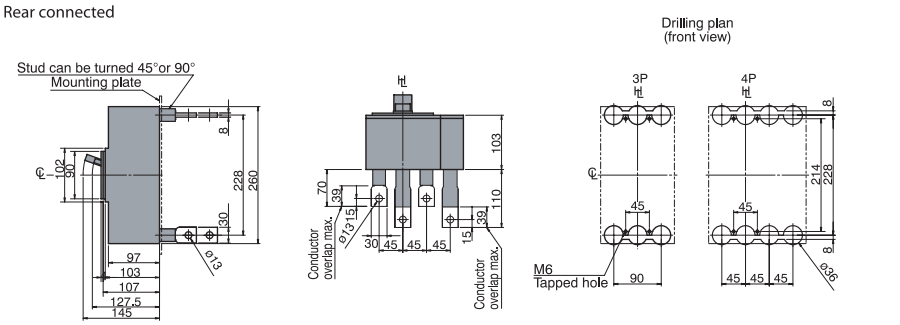

Panel cutout (front view)

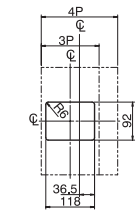

Panel cutout dimensions shown give an allowance of 1.0mm around the handle escutcheon.

Front connected with Motor Operator

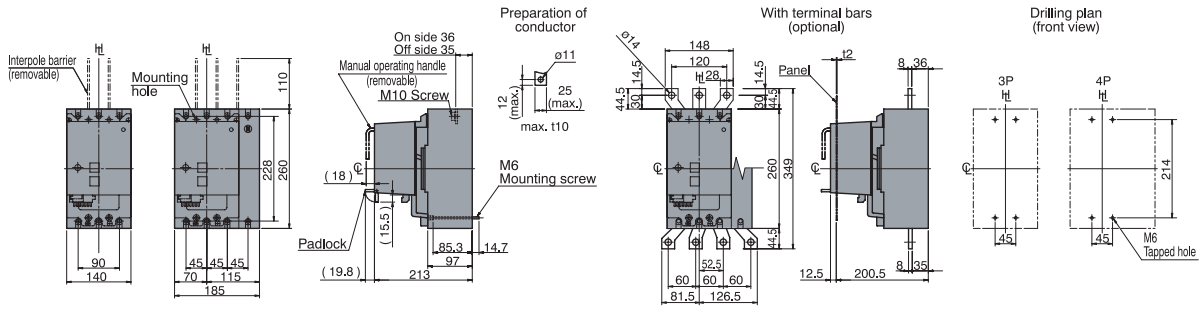

Rear connected with Motor Operator

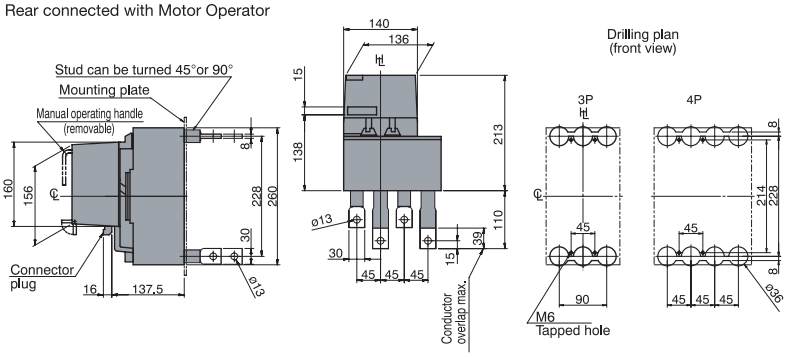

Panel cutout (front view)

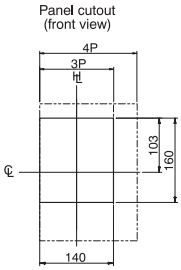

Panel hinge position (hatching area)

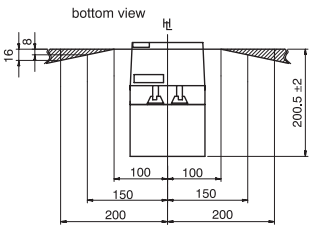

Panel cutout dimensions shown give an allowance of 1.5mm around motor operator

SECTION 7

DIMENSIONS

E400-NJ, S400-CJ, S400-NJ, S400-NE, S400-GJ, S400-GE. Plug-in Versions

ASL: Arrangement Standard Line
⊢⊣ : Handle Frame Centre Line

Outline Dimensions

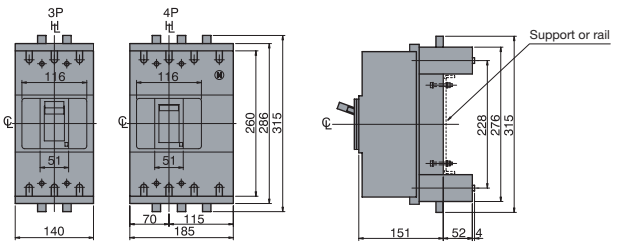

Termination of Busbar

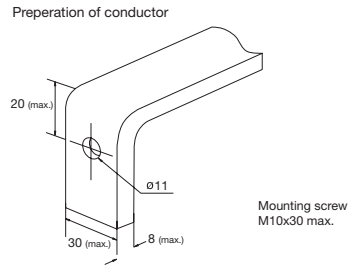

Mounting on a support or rails (shown with optional connection bars oriented for rear access)

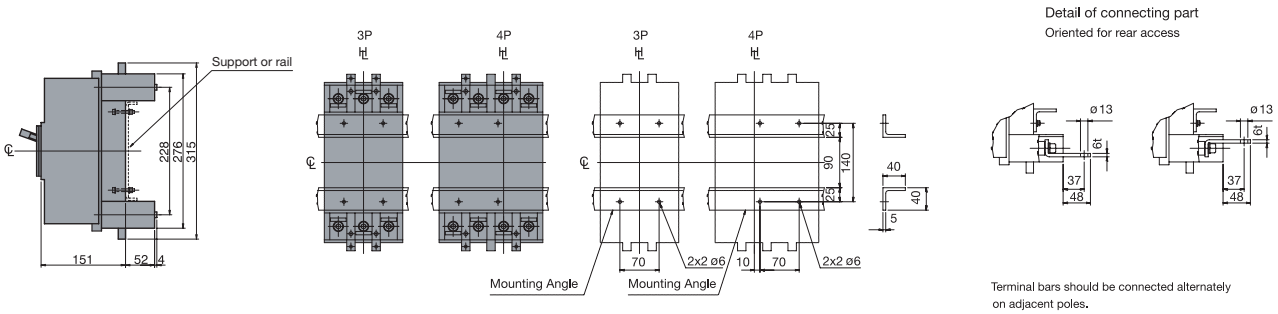

Mounting through the backplate (shown with optional connection bars oriented for rear access)

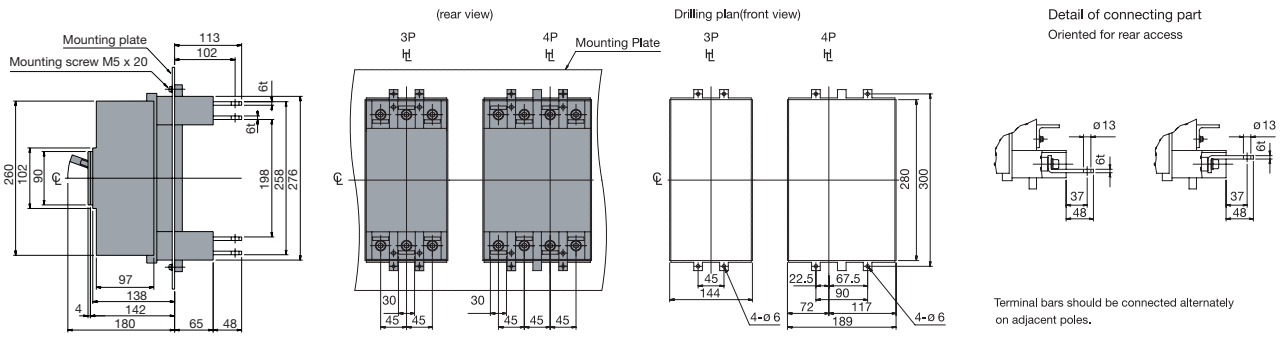

Mounting on the backplate (optional connection bars must be oriented for front access)

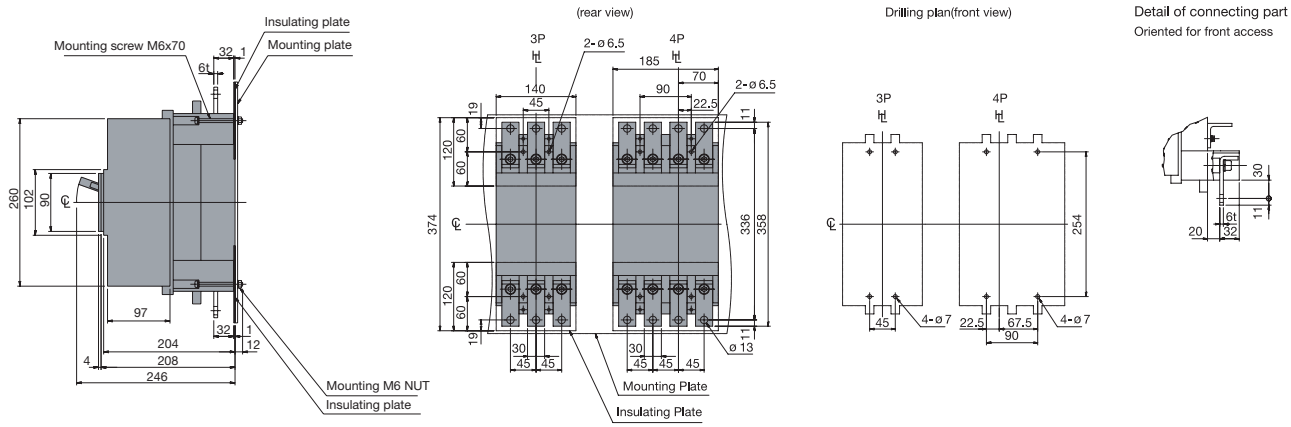

DIMENSIONS

H400-NJ, H400-NE, L400-NJ, L400-NE

ASL: Arrangement Standard Line
H : Handle Frame Centre Line

Front connected

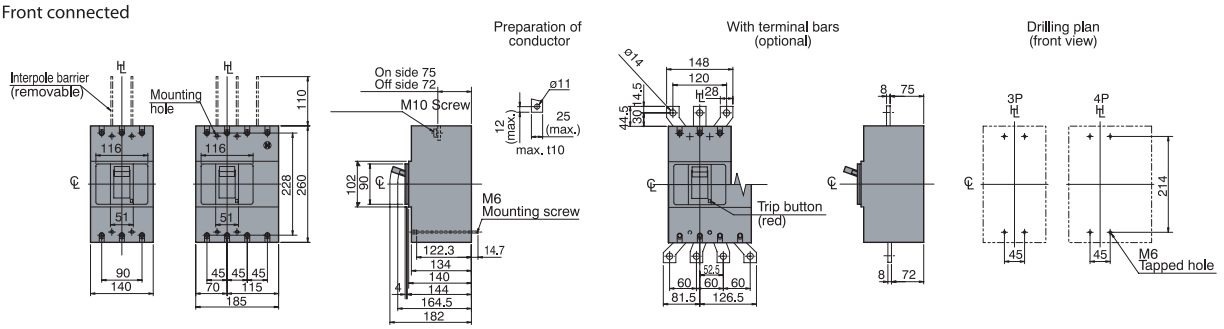

Rear connected

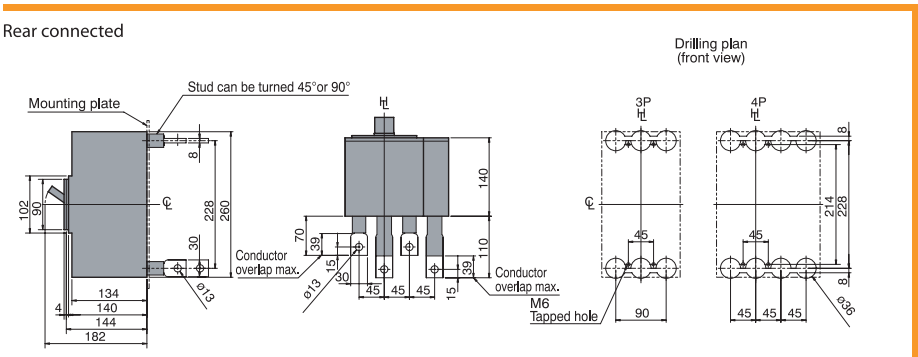

Panel cutout (front view)

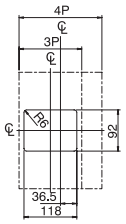

Panel cutout dimensions shown give an allowance of 1.0mm around the handle escutcheon.

Front connected with Motor Operator

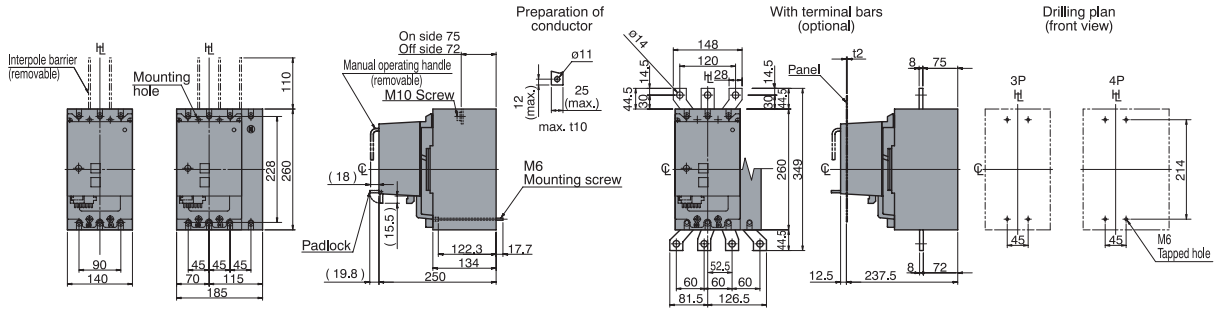

Rear connected with Motor Operator

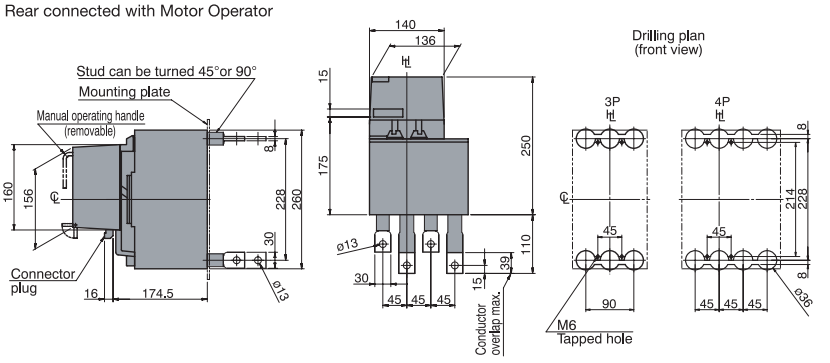

Panel cutout (front view)

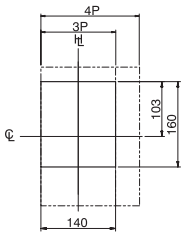

Panel cutout dimensions shown give an allowance of 1.5mm around motor operator

Panel hinge position (hatching area)

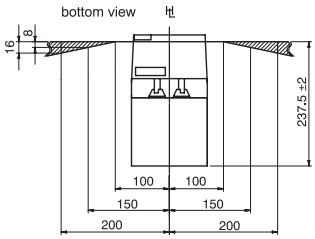

SECTION 7

DIMENSIONS

H400-NJ, H400-NE, L400-NJ, L400-NE. Plug-in Versions

ASL: Arrangement Standard Line
: Handle Frame Centre Line

Outline Dimensions

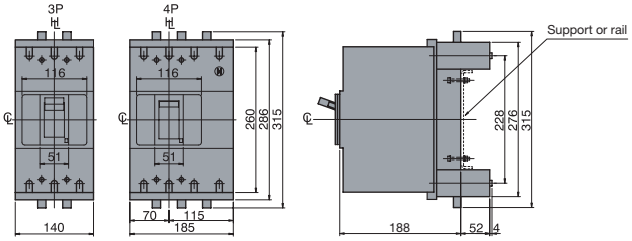

Termination of Busbar

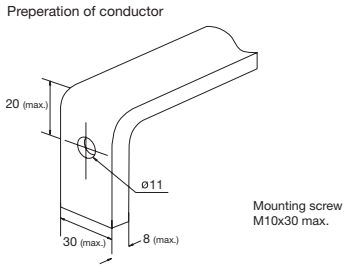

Mounting on a support or rails (shown with optional connection bars oriented for rear access)

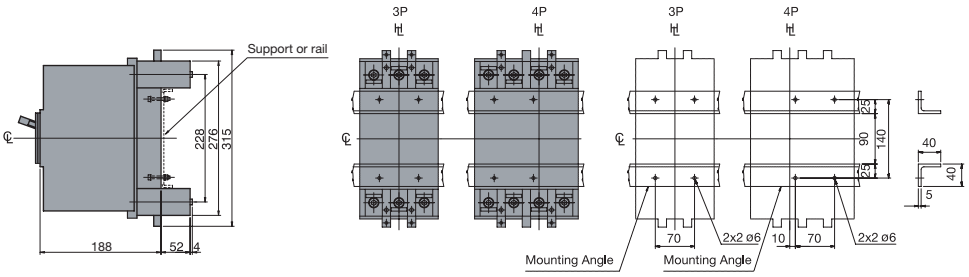

Detail of connecting part
Oriented for rear access

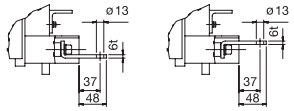

Terminal bars should be connected alternately on adjacent poles.

Mounting through the backplate (shown with optional connection bars oriented for rear access)

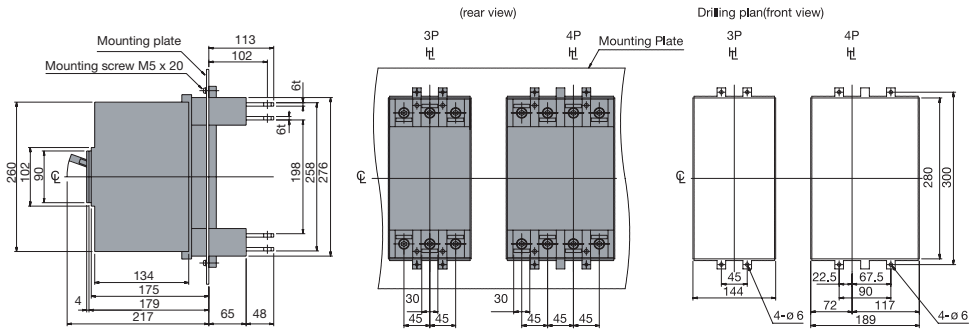

Detail of connecting part
Oriented for rear access

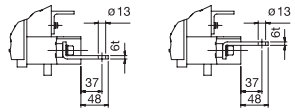

Terminal bars should be connected alternately on adjacent poles.

Mounting on the backplate (optional connection bars must be oriented for front access)

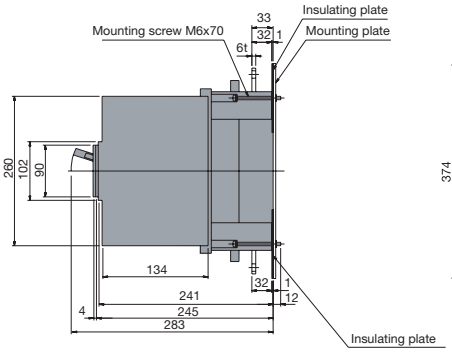

(rear view)

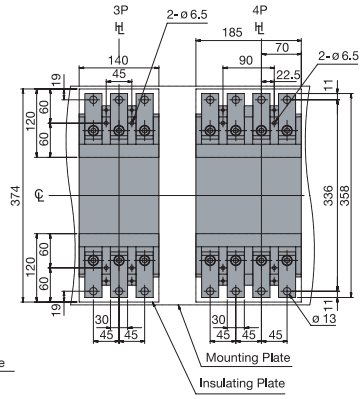

Drilling plan(front view)

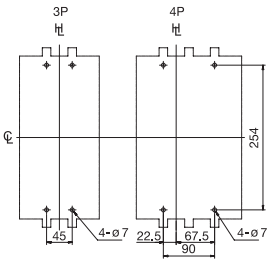

Detail of connecting part
Oriented for front access

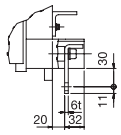

SECTION 7

DIMENSIONS

E630-NE, S630-CE, S630-GE

ASL: Arrangement Standard Line
HL : Handle Frame Centre Line

Front connected

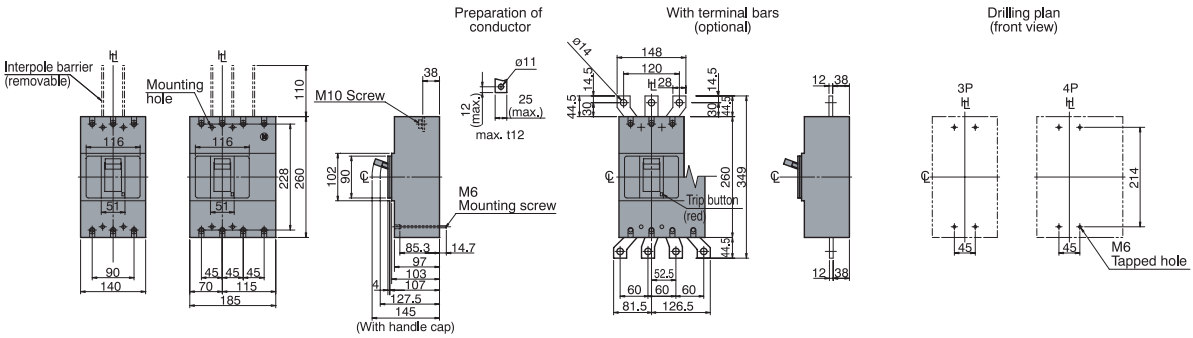

Rear connected

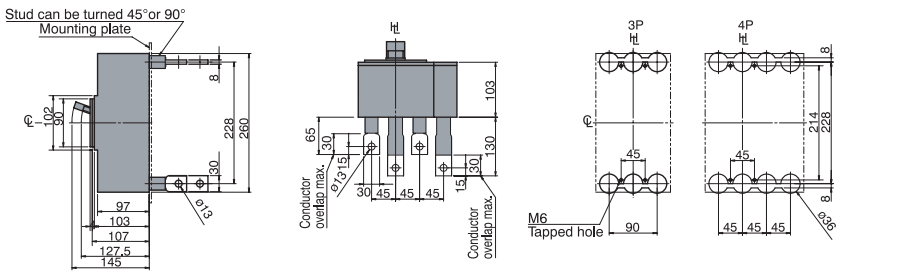

Panel cutout (front view)

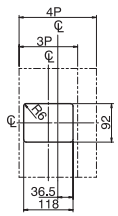

Panel cutout dimensions shown give an allowance of 1.0mm around the handle escutcheon.

SECTION 7

DIMENSIONS

E630-NE, S630-CE, S630-GE with Motor Operators

ASL: Arrangement Standard Line
: Handle Frame Centre Line

Front connected

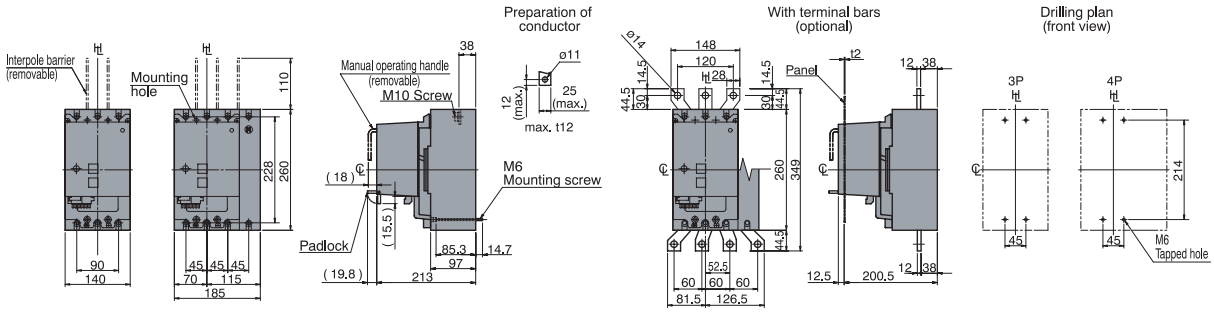

Rear connected with Motor Operator

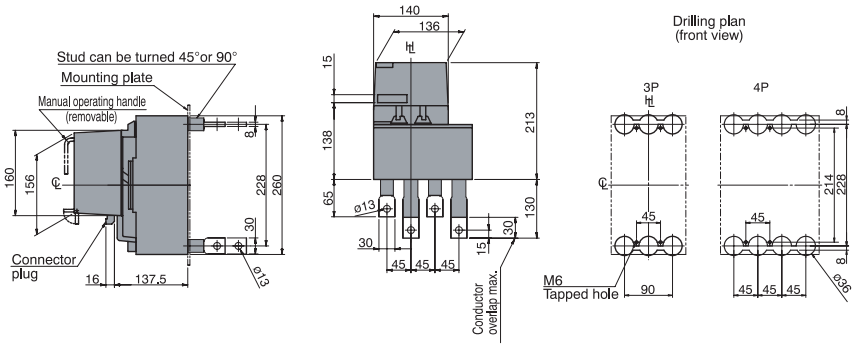

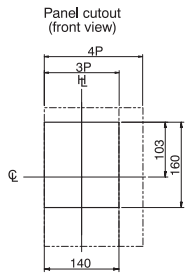

Panel cutout dimensions shown give an allowance of 1.5mm around motor operator

Panel hinge position (hatching area)

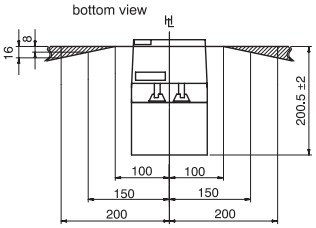

SECTION 7

DIMENSIONS

Breaker Mounted Handle

Applicable MCCB
E125, S125

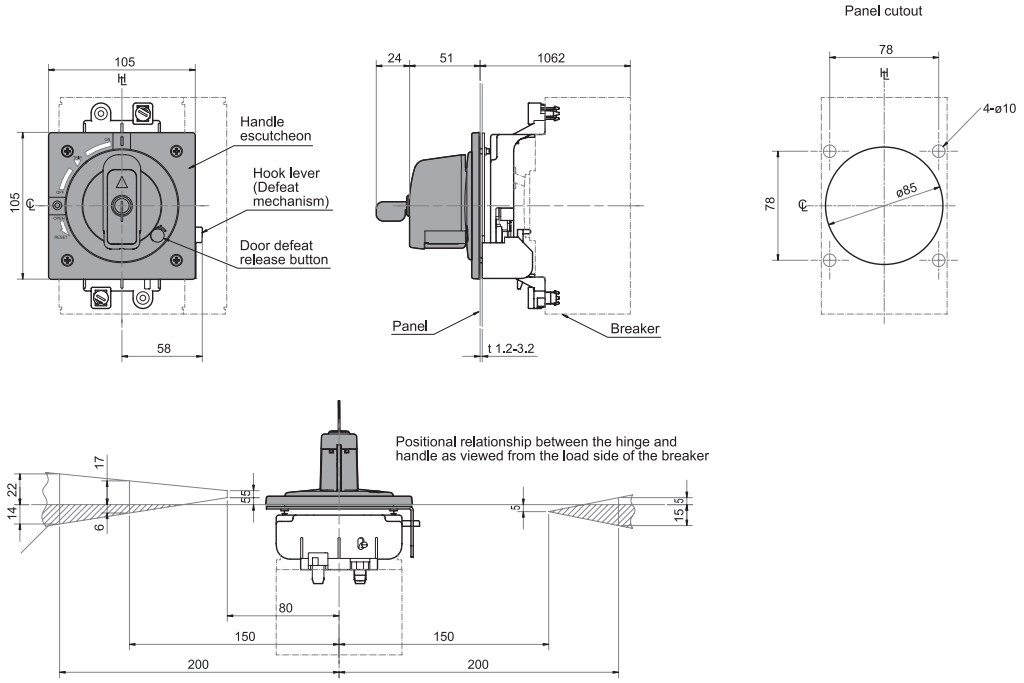

Applicable MCCB	A
S250 (exept S250-PE)	106±2
H125 L125 H250 L250 S250-PE	141±2

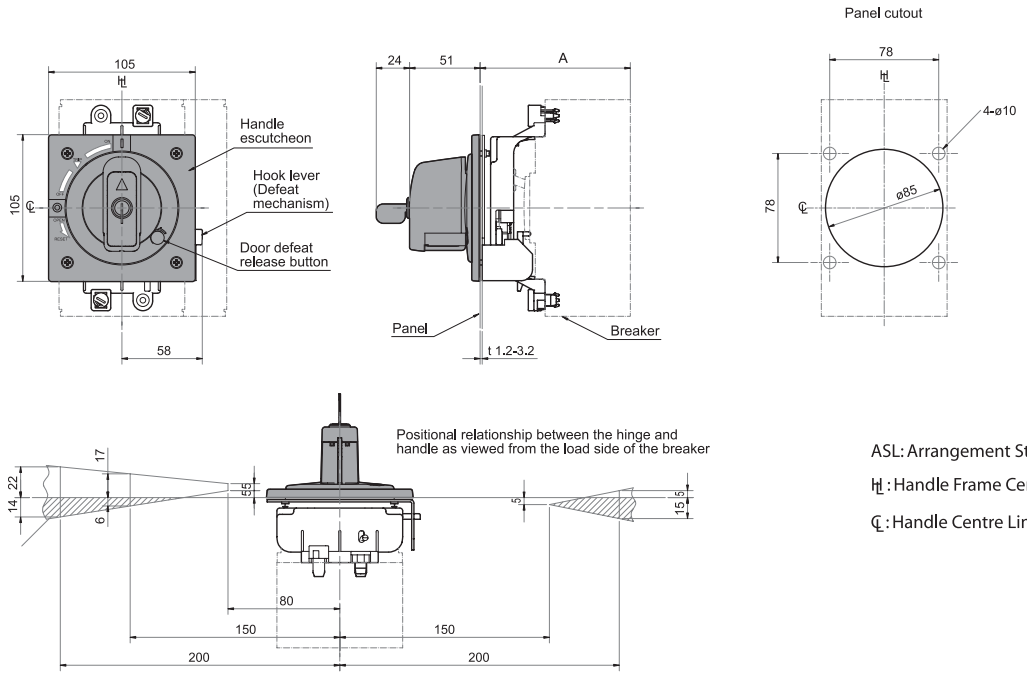

ASL: Arrangement Standard Line

H: Handle Frame Centre Line

℄: Handle Centre Line

SECTION 7

DIMENSIONS

Breaker Mounted Handle

Applicable MCCB	A
E400 S400 E630 S630	150±2
H400 L400	187±2

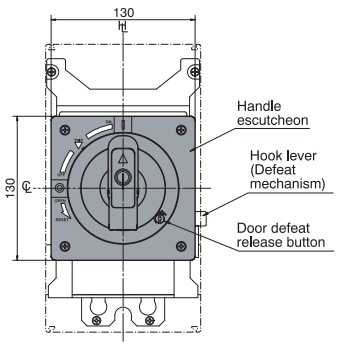

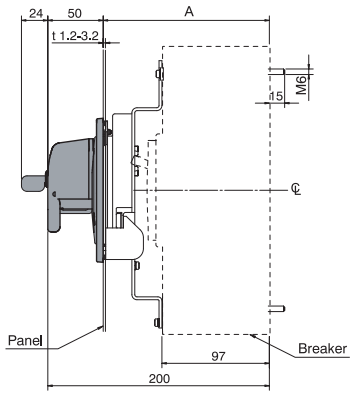

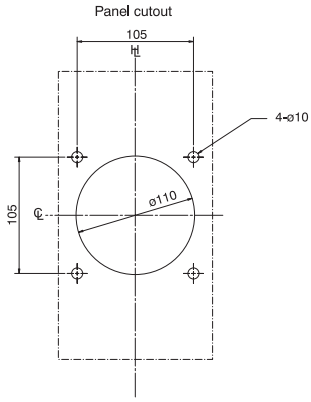

ASL: Arrangement Standard Line
HL: Handle Frame Centre Line
℄: Handle Centre Line

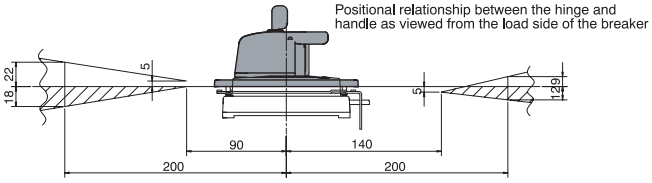

SECTION 7

DIMENSIONS

Door Mounted Handle

Applicable MCCB	A ✱1	B	C	Shaft support
E125 S125	540 max.	370	421	With +

✱1: Max. means the maximum length for A without cutting the shaft.
+ The shaft can be cut to the required length. If it is necessary to cut the shaft so short that it does not protrude beyond the shaft support, the shaft support may be removed.

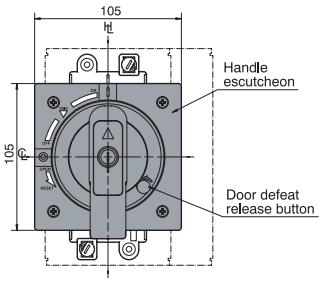

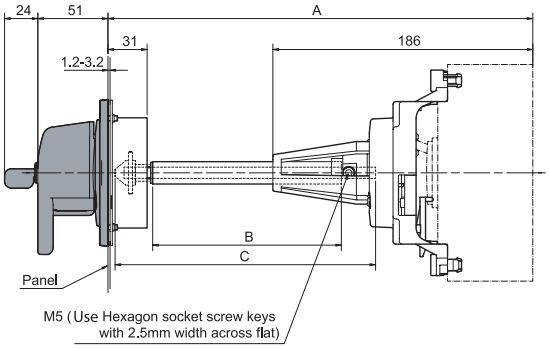

Panel cutout

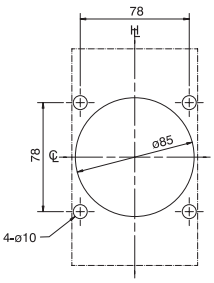

Positional relationship between the hinge and handle as viewed from the load side of the breaker

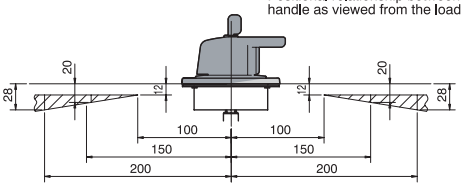

ASL: Arrangement Standard Line
: Handle Frame Centre Line
℄ : Handle Centre Line

Padlock dimensions (mm)

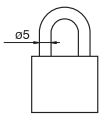

SECTION 7

DIMENSIONS

Door Mounted Handle

Applicable MCCB	A ⁎1	B	C	D	Shaft support
E250 S250 (except S250-PE)	540 max.	370	421	186	With +
S250-PE H125 L125 H160 L160 H250 L250	575 max.	370	421	221	With +

⁎1: Max. means the maximum length for A without cutting the shaft.
+ The shaft can be cut to the required length. If it is necessary to cut the shaft so short that it does not protrude beyond the shaft support, the shaft support may be removed.

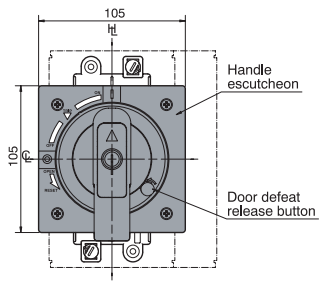

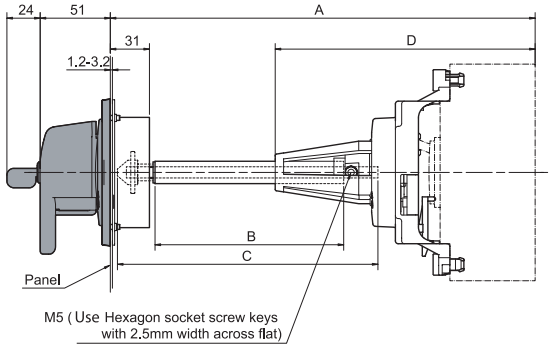

Panel cutout

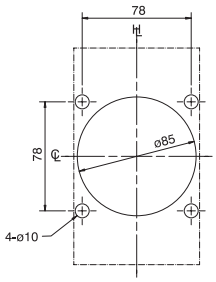

Positional relationship between the hinge and handle as viewed from the load side of the breaker

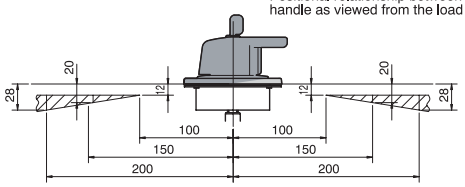

ASL: Arrangement Standard Line
: Handle Frame Centre Line
: Handle Centre Line

Padlock dimensions (mm)

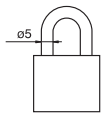

SECTION 7

DIMENSIONS

Door Mounted Handle

Applicable MCCB	A ⁎1	B	C	D	Shaft support
E400 E630	270 min.	12	107.5	—	Without
S400 S630	610 max.	280	447.5	261	With +
H400	307 min.	12	107.5	—	Without
L400	647 max.	280	447.5	298	With +

⁎1: Min. means the minimum length for A by cutting the shaft.
Max. means the maximum length for A without cutting the shaft.
+ The shaft can be cut to the required length. If it is necessary to cut the shaft so short that it does not protrude beyond the shaft support, the shaft support may be removed.

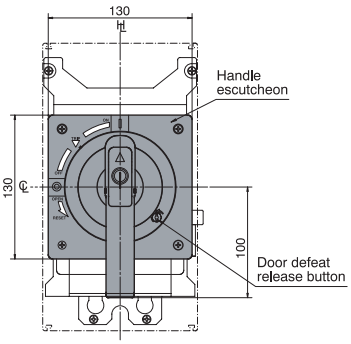

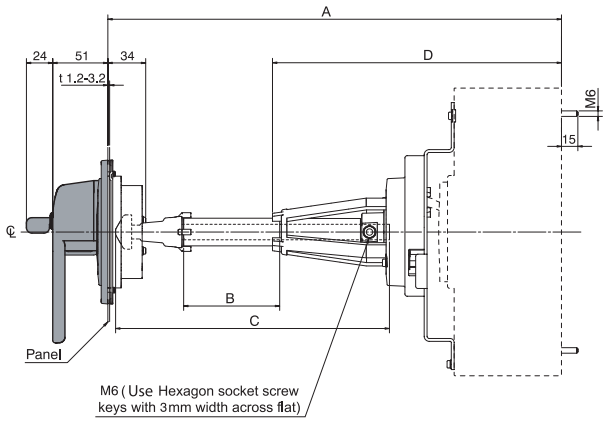

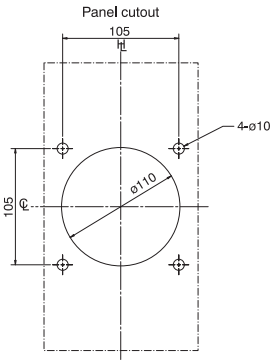

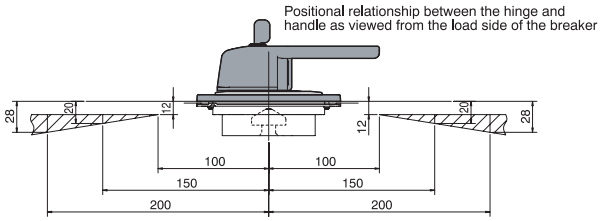

ASL: Arrangement Standard Line
HL: Handle Frame Centre Line
℄: Handle Centre Line

Padlock dimensions (mm)

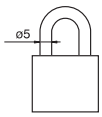

SECTION 7

DIMENSIONS

Terminal Covers

Terminal covers for Front connected MCCB's (CF)

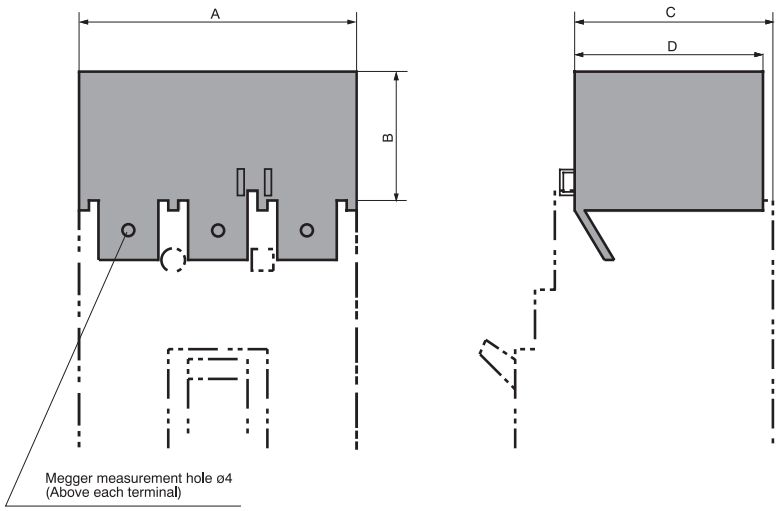

Terminal covers for Solderless terminal type MCCB's (CS)

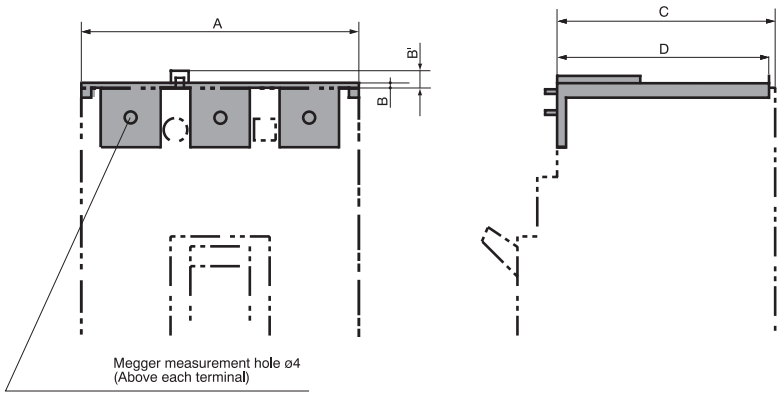

MCCB type	Connection	A			B			B'	C			D		
		1P	3P	4P	1P	3P	4P	3P, 4P	1P	3P	4P	1P	3P	4P
E125, S125	Front conn.	30	90	120	40	40	40	—	48	48	48	46	46	46
	Solderless Terminal	30	90	120	2.5	2.5	2.5	6	62.5	61	61	60	59.5	59.5
S160	Front conn. (1)	35	105	140	55	55	55	—	54	54	54	52	52	52
E250, S250 (except S250-PE)	Solderless Terminal	35	105	140	2.5	2.5	2.5	6	63	61	61	49.5	59.5	59.5
H125, L125, H160, L160	Front conn. (1)	—	105	140	—	55	55	—	—	89	89	—	87	87
H250, L250, S250-PE	Solderless Terminal	—	105	140	—	2.5	2.5	4.5	—	96	96	—	59.5	59.5
E400, S400	Front conn.	—	180	240	—	110	114	—	—	97	99	—	96	98
E630-NE, S630-CE, S630-GE	Solderless Terminal	—	140	185	—	3	3	4.5	—	97	97	—	93	93
H400,L400	Front conn.	—	180	240	—	110	114	—	—	134	136	—	96	98
	Solderless Terminal	—	140	185	—	3	3	4.5	—	134	134	—	93	93

Notes:
(1): Not applicable when flat bars (FB) are fitted.

DIMENSIONS

Terminal Covers

Terminal covers for Rear connected and Plug-in MCCB's (CR)

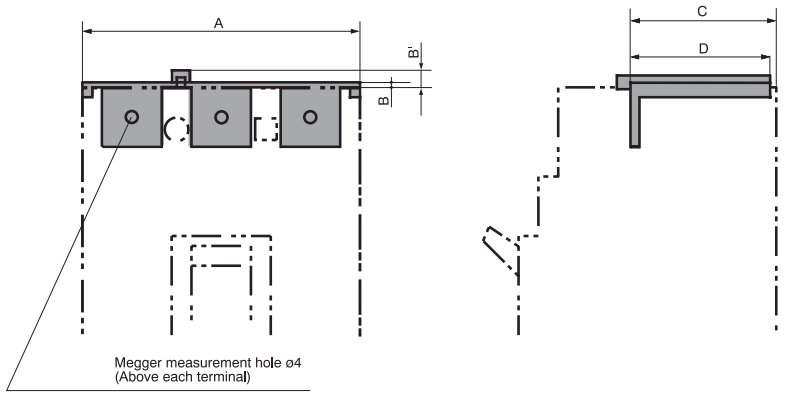

MCCB type	A		B	B'	C	D
	3 poles	4 poles				
E125, S125	90	120	2	6	41.5	40.5
S160 E250, S250 (except S250-PE)	105	140	2	6	41.5	39.5
H125, L125, H160, L160 H250, L250, S250-PE	105	140	2	6	77.5	39.5
E400, S400 H400, L400	140	185	3	4.5	97	93

SECTION 7

DIMENSIONS

Interpole Barriers

Terminal Interpole Barriers (BA)

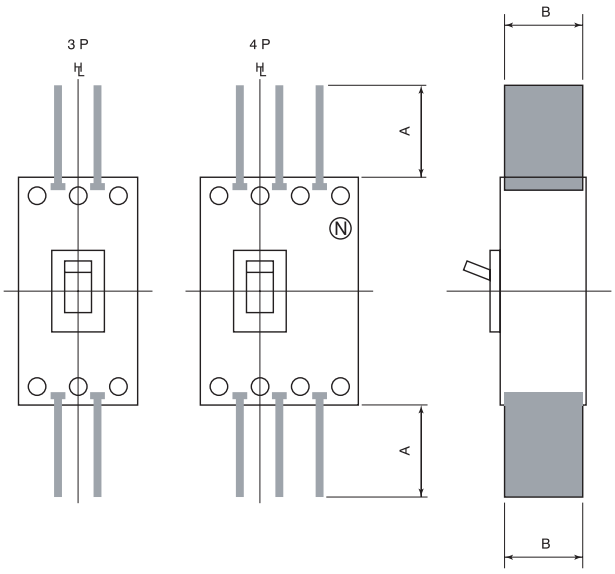

MCCB type	A	B
E125, S125	47	53
S160 E250, S250 (except S250-PE)	100	53
H125, L125, H160, L160 H250, L250, S250-PE	100	88
E400, S400 E630 S630	110	95
H400, L400	110	95

ASL: Arrangement Standard Line
HL: Handle Frame Centre Line
℄: Handle Centre Line

SECTION 7

DIMENSIONS

Terminal Blocks for Front-Connected and Rear-Connected MCCBs

Left terminal designations
Example

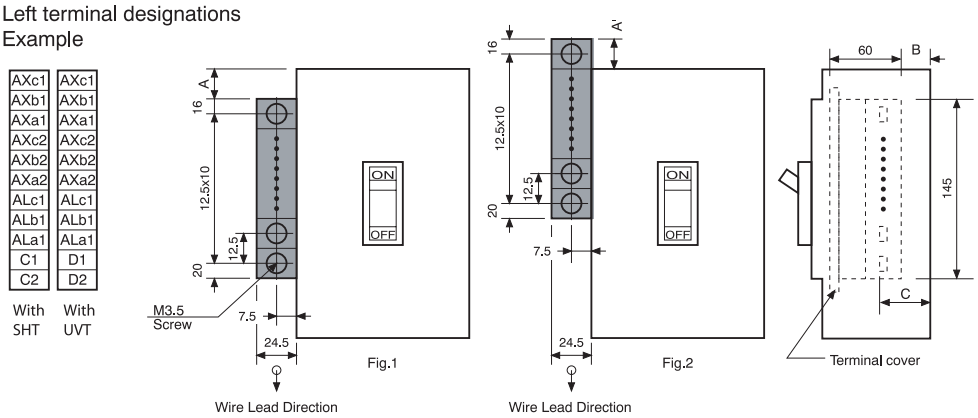

MCCB type	A	A'	B	C	Fig.
S125	—	3	0.5	40	2
S160 E250, S250 (except S250-PE)	2	—	0.5	40	1
H125, L125, H160, L160 H250, L250, S250-PE	2	—	35.5	75	1

Comments:
1. The tightening torque for the M3.5 terminal screw is 0.9 to 1.2 Nm.
2. Connection wire size is 2.5 mm² (max).

Left terminal designations

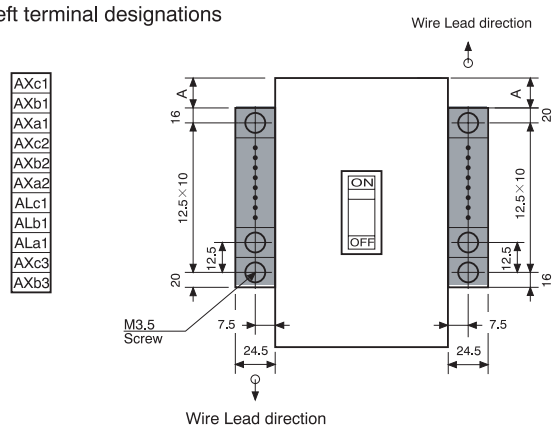

Right terminal designations

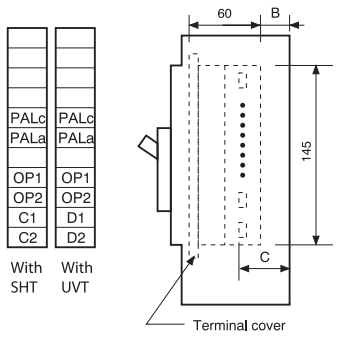

MCCB type	A	B	C
E400, S400	39.5	30.5	70
H400, L400	39.5	67.5	107

Comments:
1. The tightening torque for the M3.5 terminal screw is 0.9 to 1.2 Nm.
2. Connection wire size is 2.5 mm² (max).

SECTION 7

DIMENSIONS

Slide Interlocks

ASL: Arrangement Standard Line ℄: Handle Frame Centre Line ℄: Handle Centre Line

Mechanical Interlocks slide type (MS)

For 125A frame size

MCCB type	A
E125, S125	91.7

Panel Cutout

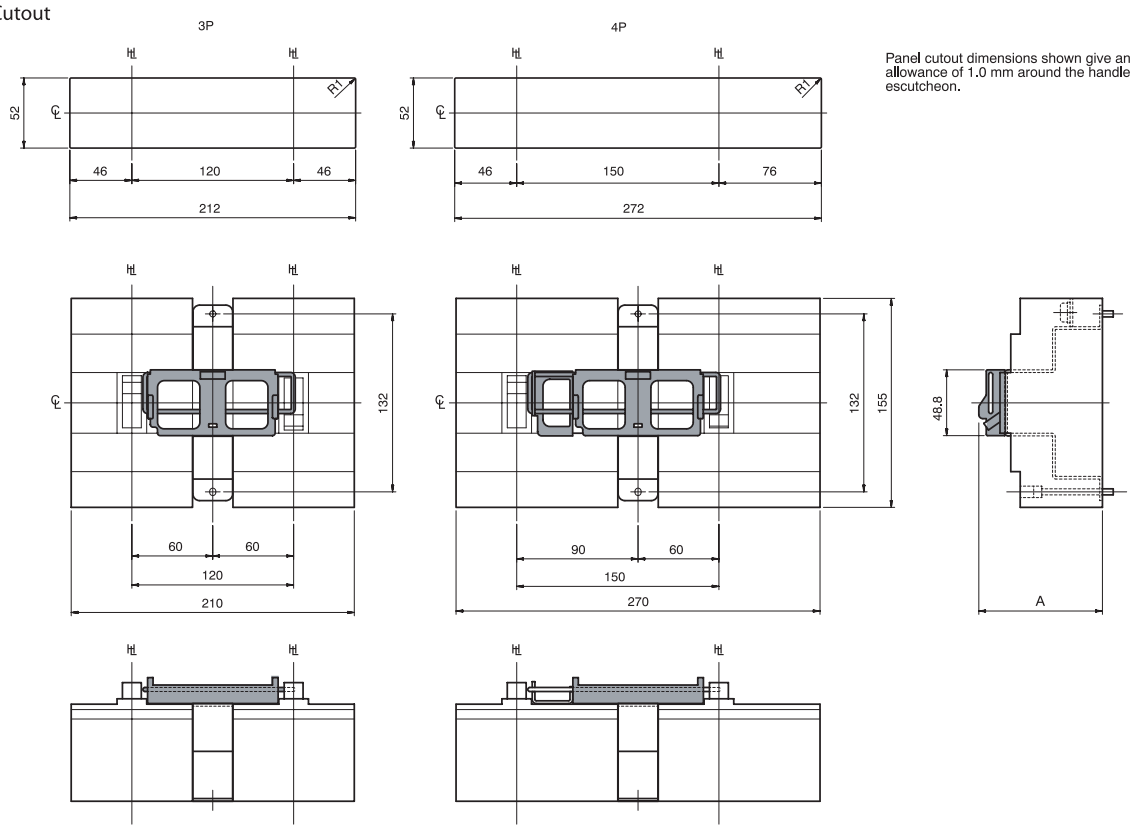

Panel cutout dimensions shown give an allowance of 1.0 mm around the handle escutcheon.

Drilling plan

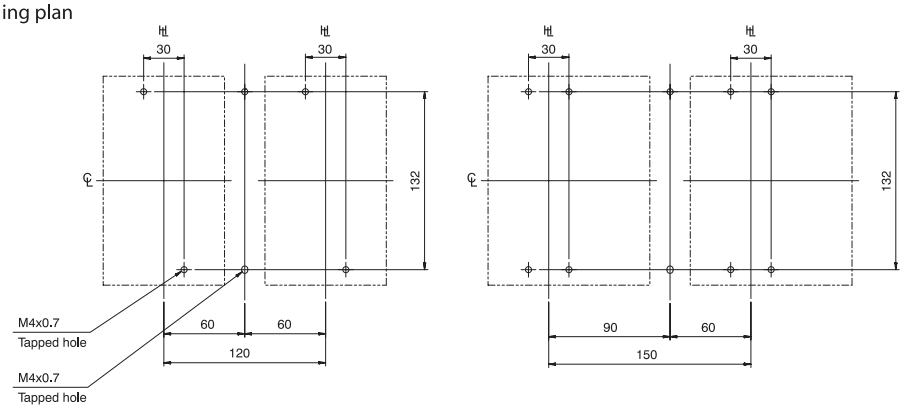

SECTION 7

DIMENSIONS

Slide Interlocks

ASL: Arrangement Standard Line ⊢⊣ : Handle Frame Centre Line ℄ : Handle Centre Line

Mechanical Interlocks slide type (MS)

For 125A, 160A, 250A frame size

MCCB type	A
S160, E250, S250 (Except S250-PE.)	91.7
H125, L125, H160, L160 H250, L250, S250-PE	126.7

Panel Cutout

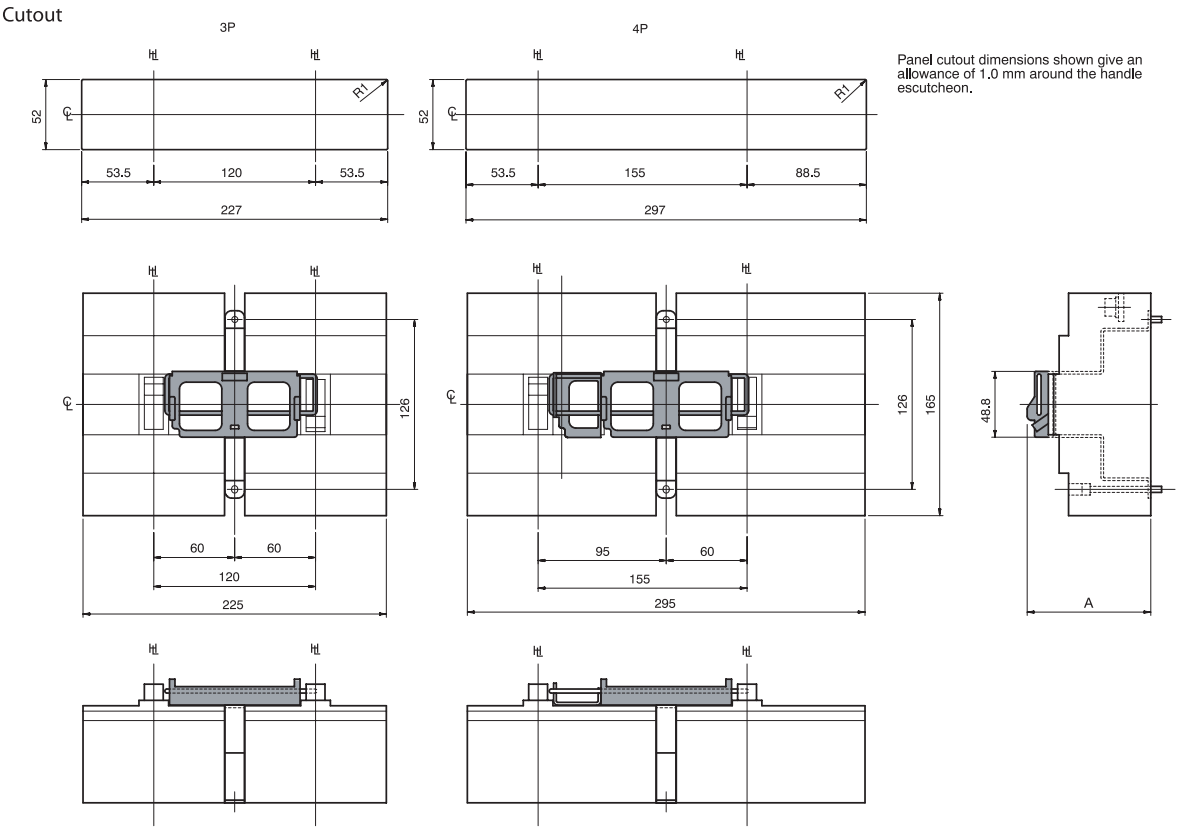

Panel cutout dimensions shown give an allowance of 1.0 mm around the handle escutcheon.

Drilling plan

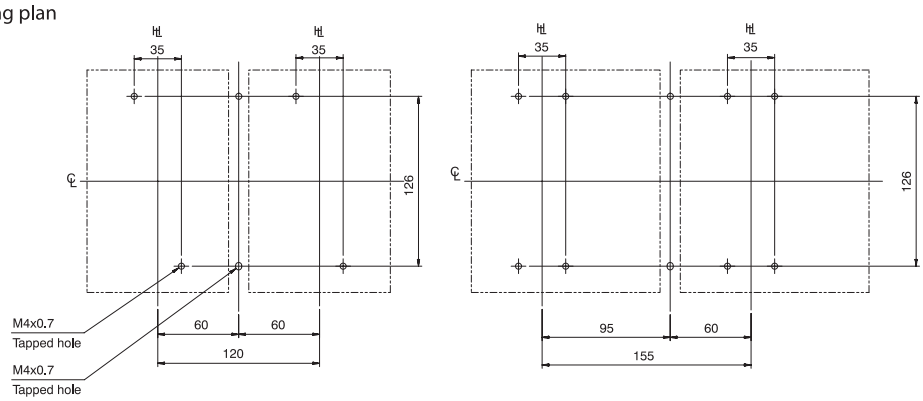

SECTION 7

DIMENSIONS

Slide Interlocks

ASL: Arrangement Standard Line HL: Handle Frame Centre Line ℄: Handle Centre Line

Mechanical Interlocks slide type (MS)

For 400A, 630A frame size

MCCB type	A
E400, S400	135.5
H400, L400	172.5
E630, S630	135.5

Panel Cutout

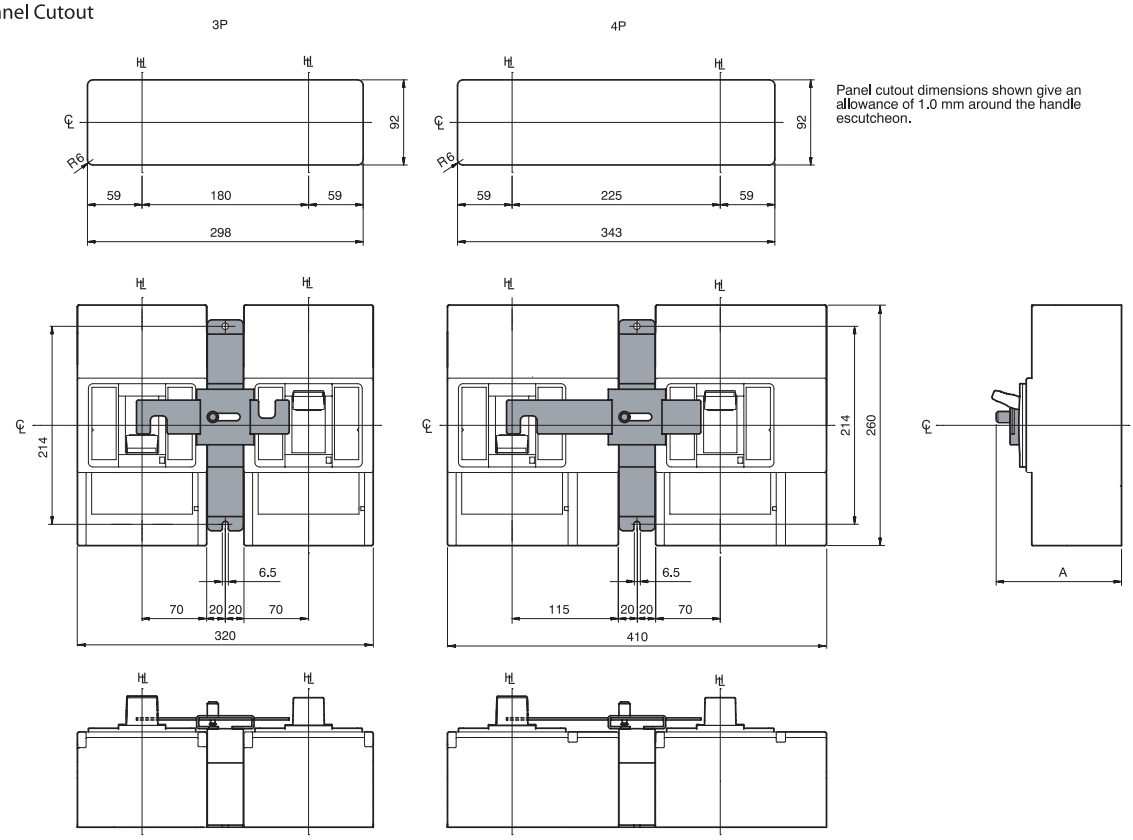

Panel cutout dimensions shown give an allowance of 1.0 mm around the handle escutcheon.

Drilling plan

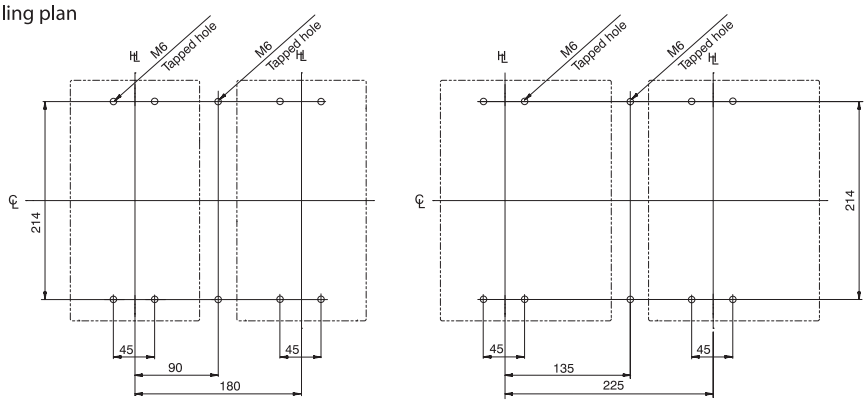

SECTION 7

DIMENSIONS

Link Interlocks

ASL: Arrangement Standard Line ℄: Handle Frame Centre Line ℄: Handle Centre Line

Mechanical Interlocks link type (ML)

For 125A frame size

MCCB type	A
E125, S125	81.7

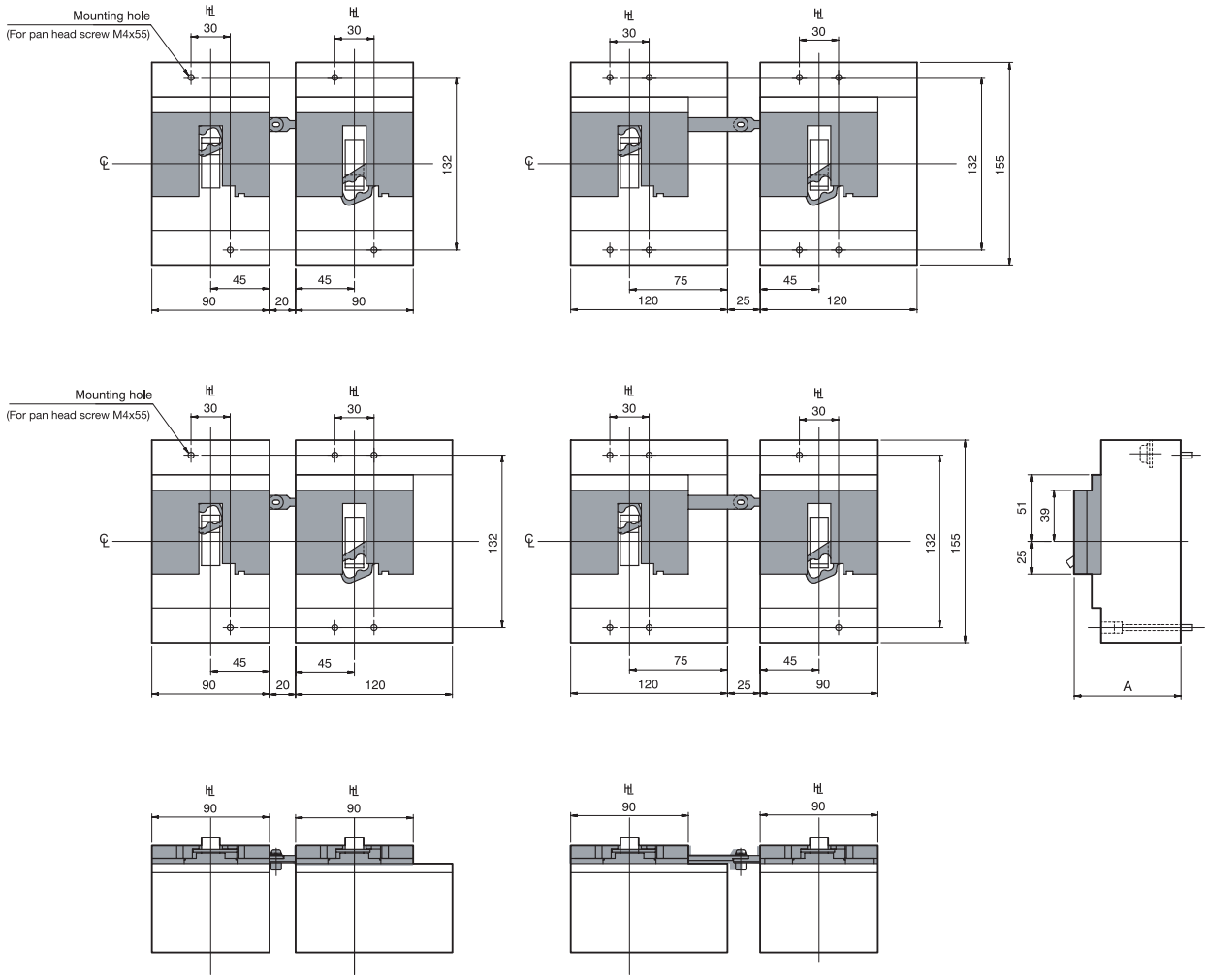

DIMENSIONS

Link Interlocks

ASL: Arrangement Standard Line ℄: Handle Frame Centre Line ℄: Handle Centre Line

Mechanical Interlocks link type (ML)

For 125A, 160A, 250A frame size

MCCB type	A
S160, E250, S250 (Except S250-PE.)	81.7
H125, L125, H160, L160 H250, L250, S250-PE	116.7

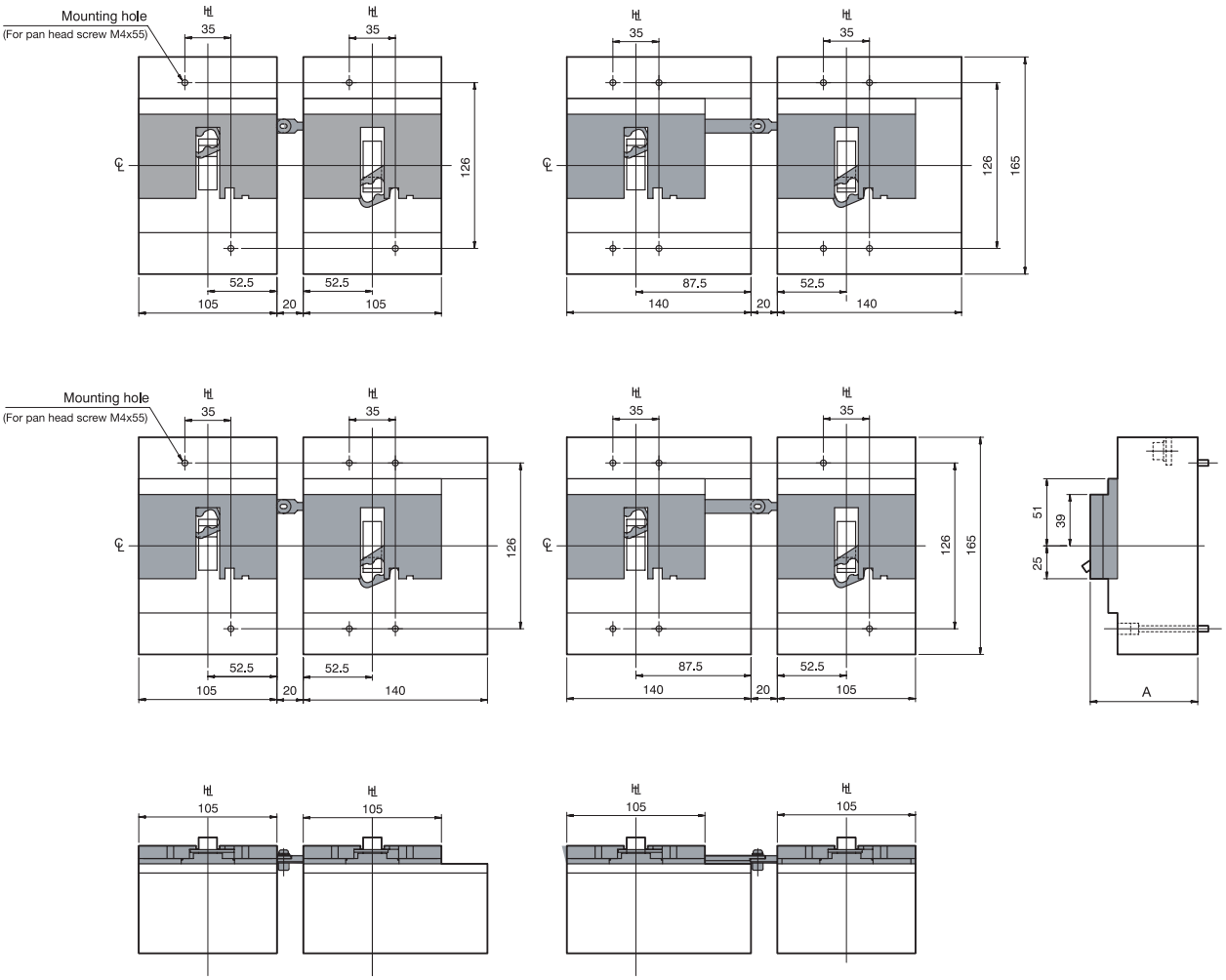

DIMENSIONS

Link Interlocks with motor operators

ASL: Arrangement Standard Line ⊞: Handle Frame Centre Line ℄: Handle Centre Line

Mechanical Interlocks link type (ML)

For 400A, 630A frame size

MCCB type	A
E400, S400	213
H400, L400	250
E630, S630	213

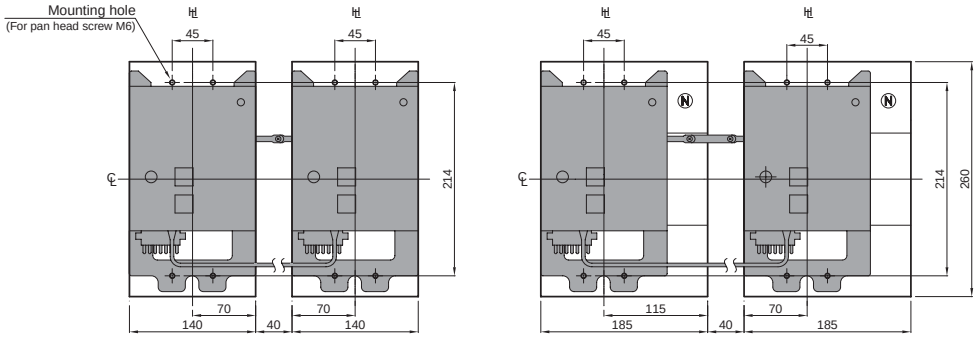

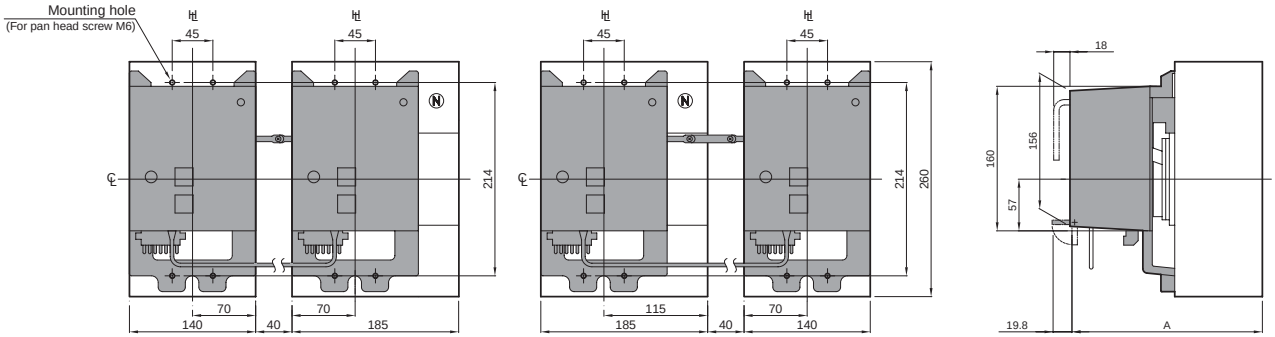

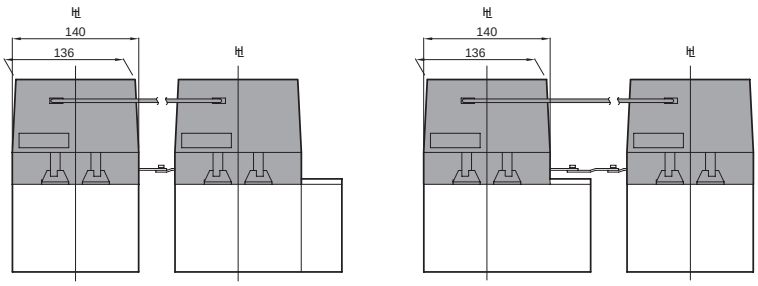

DIMENSIONS

Link Interlocks with breaker mounted handles

ASL: Arrangement Standard Line ⊩: Handle Frame Centre Line ℄: Handle Centre Line

Mechanical Interlocks link type (ML)

For 400A, 630A frame size

MCCB type	A	B
E400, S400	200	150±2
H400, L400	237	187±2
E630, S630	200	150±2

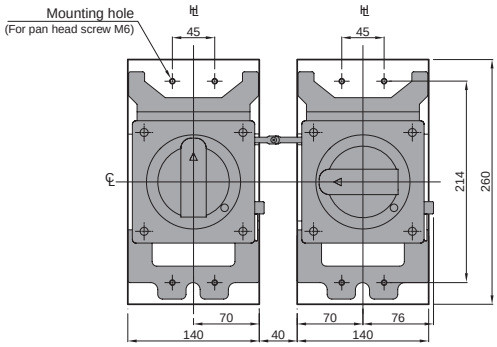

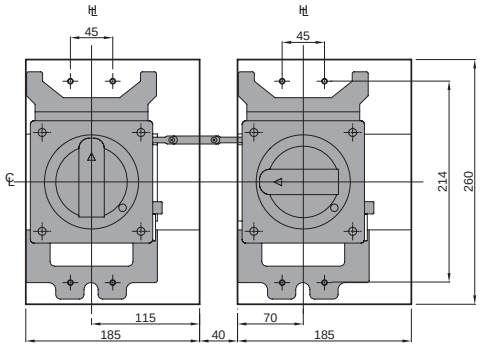

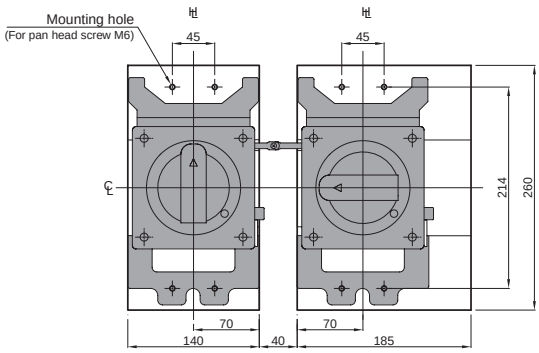

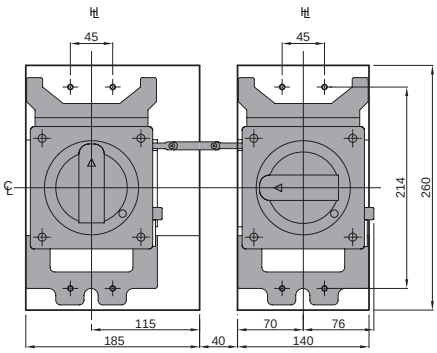

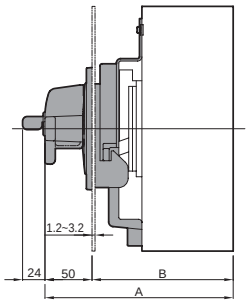

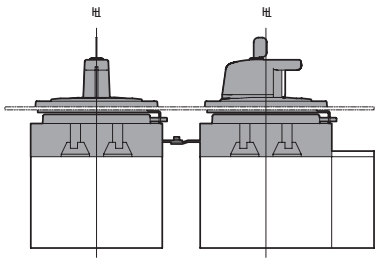

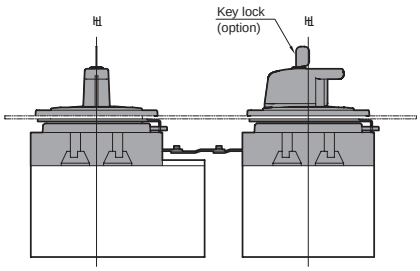

DIMENSIONS

Wire Interlocks

Mechanical Interlocks wire type (MW)

For 125A frame size

MCCB type	A
E125, S125	81.7

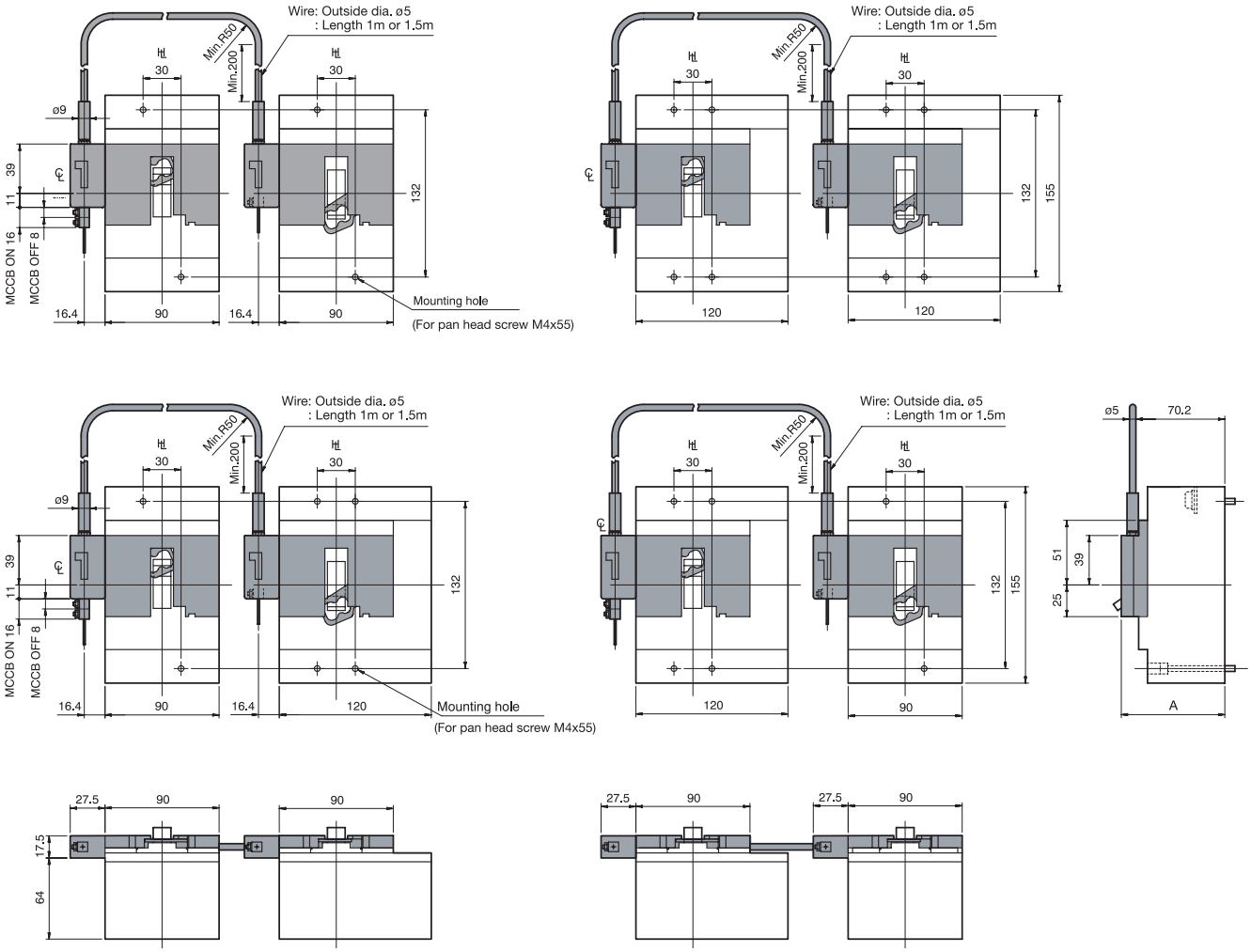

DIMENSIONS

Wire Interlocks

ASL: Arrangement Standard Line ℍ: Handle Frame Centre Line ℄: Handle Centre Line

Mechanical Interlocks wire type (MW)

For 125A, 160A, 250A frame size

MCCB type	A	B
S160, E250, S250 (Except S250-PE.)	81.7	64
H125, L125, H160, L160 H250, L250, S250-PE	116.7	99

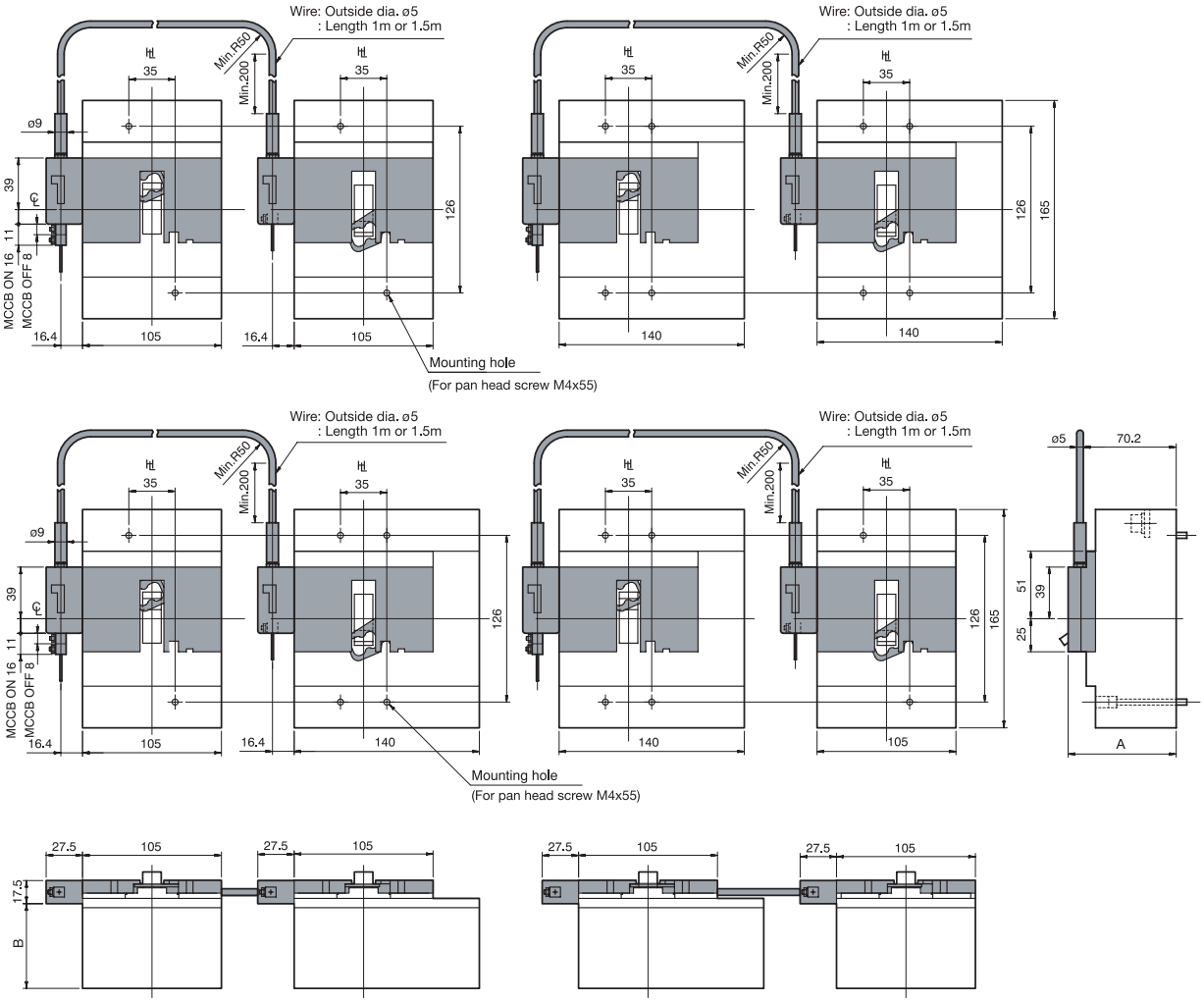

DIMENSIONS

Wire Interlocks with motor operators

ASL: Arrangement Standard Line ⊢: Handle Frame Centre Line ℄: Handle Centre Line

Mechanical Interlocks wire type (MW)

For 400A, 630A frame size

MCCB type	A	B
E400, S400	213	105.4
H400, L400	250	142.4
E630, S630	213	105.4

Cable length	C	D
1.0m	180min. – 430max.	225min. – 430max.
1.5m	180min. – 930max.	225min. – 930max.

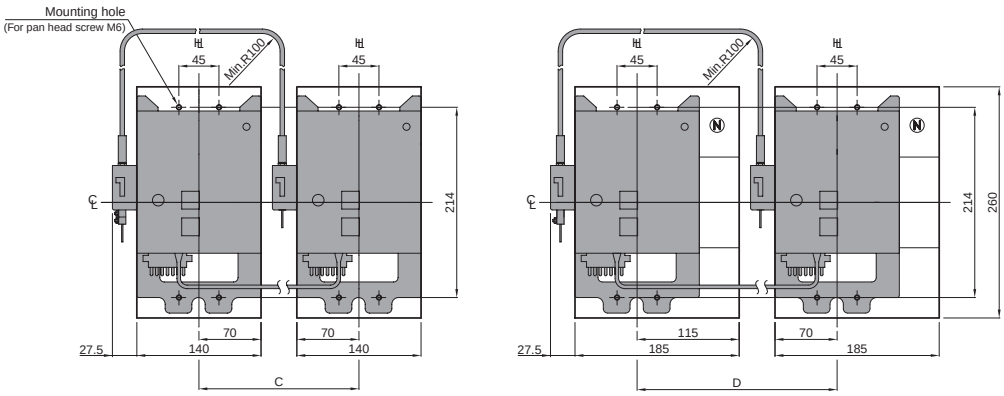

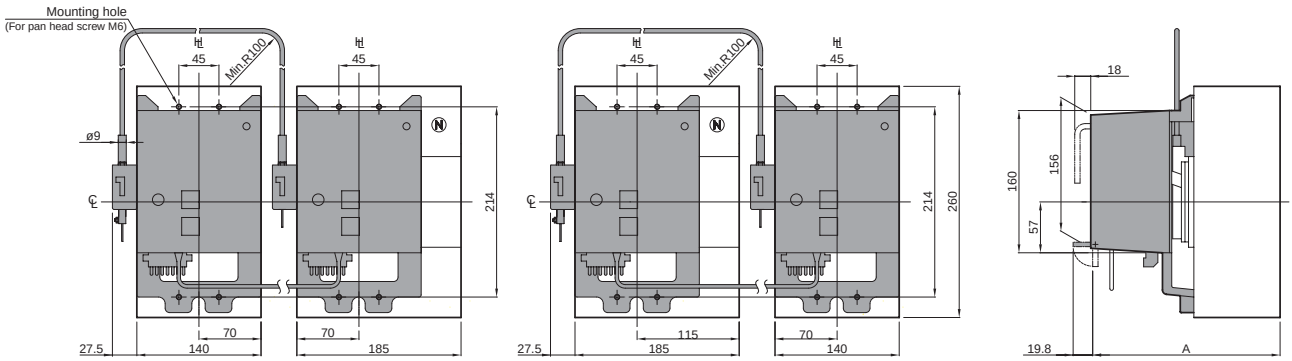

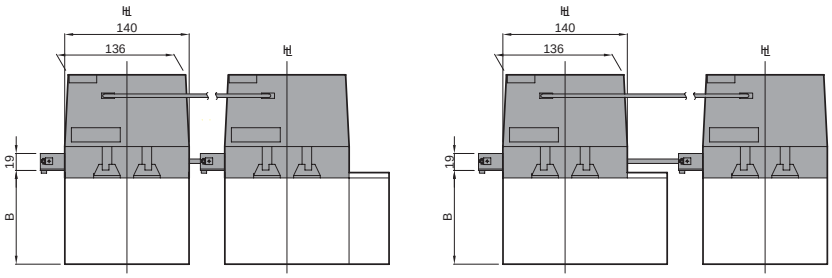

DIMENSIONS

Wire Interlocks with breaker mounted handles

ASL: Arrangement Standard Line ⊞: Handle Frame Centre Line ℄: Handle Centre Line

Mechanical Interlocks wire type (MW)

For 400A, 630A frame size

MCCB type	A	B
E400, S400	200	150±2
H400, L400	237	187±2
E630, S630	200	150±2

Cable length	C	D
1.0m	180min. – 430max.	225min. – 430max.
1.5m	180min. – 930max.	225min. – 930max.

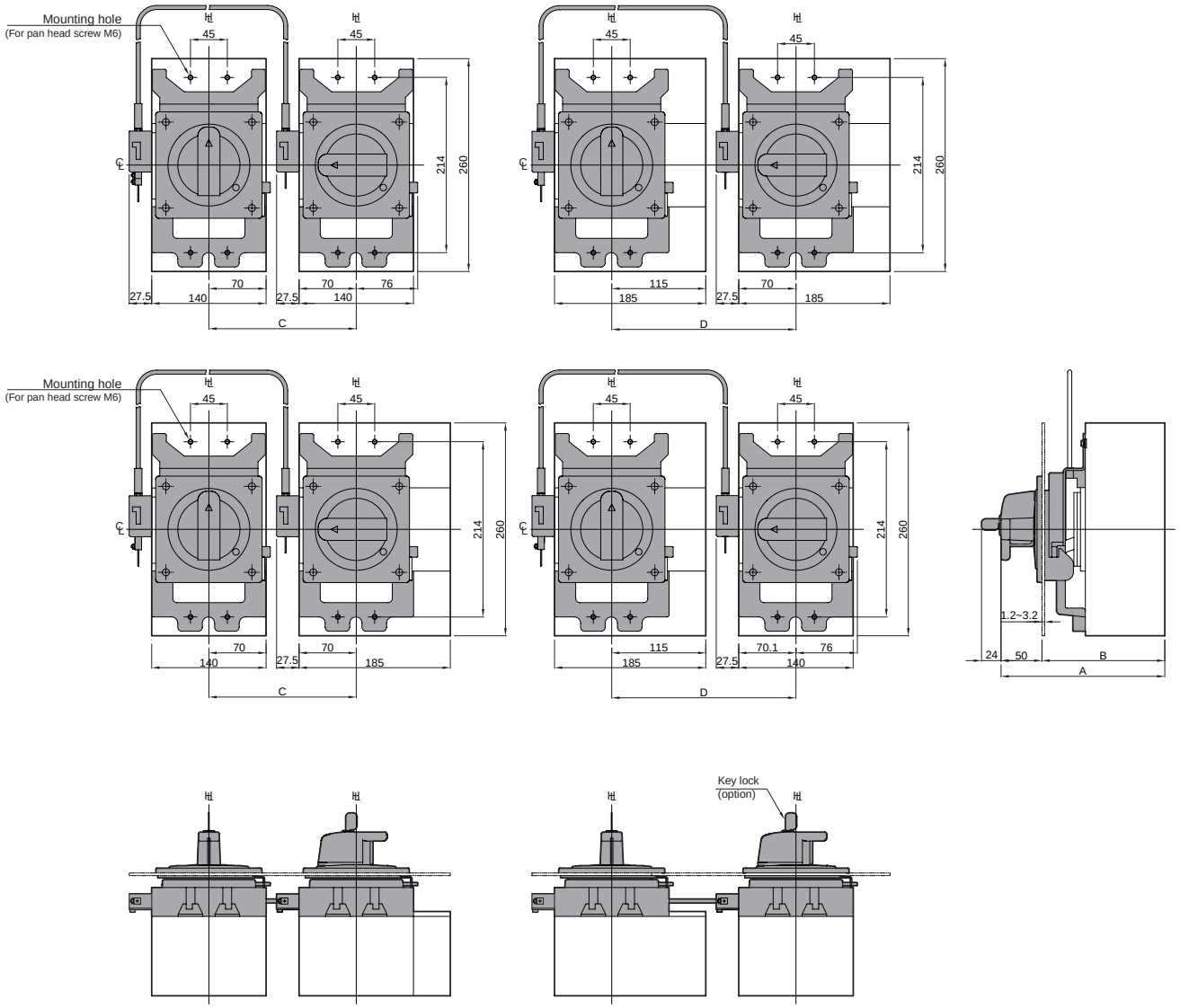

DIMENSIONS

Position of Trip Button

Positions of Trip Button

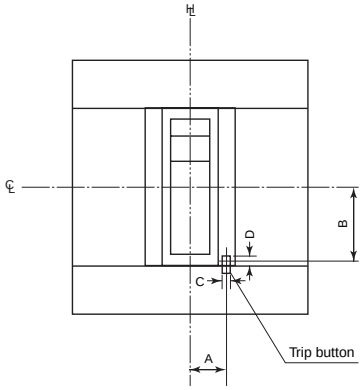

MCCB type	Poles	A	B	C	D
S125	3, 4	13.8	20.4	3.3	4.3
S160 E250, S250 (except S250-PE)	3, 4	17.2	20.4	3.3	4.3
H125, L125, H160, L160 H250, L250, S250-PE	3, 4	17.2	20.4	3.3	4.3
E400, S400 H400, L400 E630 S630	3, 4	21.6	37.2	5.3	6.6

NHP Motor Control

Motor Control
Control & Switching

sprecher+schuh
ELETTRONICA SANTERNO
AuCom
Microelettrica
ghisalba
HITACHI
CARLO GAVAZZI
NHP Austrol
T-VERTER
saia-burgess
VATECH ELIN
TER

NHP Power Distribution

Power Distribution
Power Quality

TERASAKI Innovators in Protection Technology
SOCOMEC Industrial Switching & Protection Systems
ALPES TECHNOLOGIES
BELUK
CAMTO
Aichi
TransCon
efi ELECTRONICS
cabur s.r.l.
wöhner

NHP Automation and Safety

Automation & Communication
Safety & Protection
Sensing & Detection

B&R Bernecker + Rainer
WAGO INNOVATIVE CONNECTIONS
Adroit
SCHMERSAL
MITSUBISHI ELECTRIC
CARLO GAVAZZI
ESA
SUNX
HITACHI
HAAKE
.steute
REER
ACTRON
ASi

NHP Control and Panel Products

Hazardous Location
Monitoring & Display
Enclosures & Termination
Contractor Products

CUBIC
ELDON
FIBOX
CARLO GAVAZZI
WAGO INNOVATIVE CONNECTIONS
IME
finder
ZANARDO
MOFLASH SIGNALLING LTD
klaxon
KATKO
ELEKTRA
GRÄSSLIN
COSMOTEC
Spohn + Burkhardt
BARTEC
SCHUCH
KOBISHI
ERICO
NHPEx
SIRENA s.p.a.
IBOCO
THORSMANS
ROSE
STEGO
nemo

AUSTRALIA
www.nhp.com.au

VICTORIA
MELBOURNE HEADQUARTERS
43-67 River Street
Richmond Victoria 3121
Telephone +61 3 9429 2999
Fax +61 3 9429 1075
Email mel-sales@nhp.com.au

NATIONAL DISTRIBUTION AND MANUFACTURING CENTRE
104-106 William Angliss Drive
Laverton North Victoria 3026
Telephone +61 3 9429 2999
Fax +61 3 9368 2997
Email mel-sales@nhp.com.au

TASMANIA
HOBART
2/65 Albert Road
Moonah Tasmania 7009
Telephone +61 3 6228 9575
Fax +61 3 6228 9757
Email tas-sales@nhp.com.au

QUEENSLAND
BRISBANE
16 Riverview Place
Murarrie Queensland 4172
Telephone +61 7 3909 4999
Fax +61 7 3399 9712
Email bris-branch@nhp.com.au

TOWNSVILLE
62 Leyland Street
Garbutt Queensland 4814
Telephone +61 7 4779 0700
Fax +61 7 4775 1457
Email tsv-branch@nhp.com.au

ROCKHAMPTON
14 Robison Street
Rockhampton Queensland 4701
Telephone +61 7 4927 2277
Fax +61 7 4922 2947
Email rkh-branch@nhp.com.au

TOOWOOMBA
Cnr Carroll St & Struan Crt
Toowoomba Queensland 4350
Telephone +61 7 4634 4799
Fax +61 7 4633 1796
Email too-branch@nhp.com.au

CAIRNS
2/1 Bramp Close
Portsmith Queensland 4870
Telephone +61 7 4035 6888
Fax +61 7 4035 6999
Email cns-branch@nhp.com.au

NEW SOUTH WALES
SYDNEY
30-34 Day Street North
Silverwater New South Wales 2128
Telephone +61 2 9748 3444
Fax +61 2 9648 4353
Email syd-branch@nhp.com.au

NEWCASTLE
575 Maitland Road
Mayfield West New South Wales 230
Telephone +61 2 4960 2220
Fax +61 2 4960 2203
Email ncl-branch@nhp.com.au

SOUTH AUSTRALIA
ADELAIDE
36-38 Croydon Road
Keswick South Australia 5035
Telephone +61 8 8297 9055
Fax +61 8 8371 0962
Email adl-branch@nhp.com.au

WESTERN AUSTRALIA
PERTH
38 Belmont Ave
Rivervale Western Australia 6103
Telephone +61 8 9277 1777
Fax +61 8 9277 1700
Email per-branch@nhp.com.au

NORTHERN TERRITORY
DARWIN
3 Steele Street
Winnellie Northern Territory 0820
Telephone +61 8 8947 2666
Fax +61 8 8947 2049
Email dar-branch@nhp.com.au

NEW ZEALAND
www.nhp-nz.com

AUCKLAND
7 Lockhart Place
Mt Wellington Auckland
Telephone +64 9 276 1967
Fax +64 9 276 1992
Email sales@nhp-nz.com

CHRISTCHURCH
85 Gasson Street
Sydenham Christchurch
Telephone +64 3 377 4407
Fax +64 3 377 4405
Email sales@nhp-nz.com

© Copyright NHP 2006

2.5

TECHNICAL DATA SHEET

Equipment Type:	Ethernet Gateway
Location:	Power Distribution
Model Numbers:	EGX100MG
Manufacturer:	Schneider
Supplier:	Schneider 80 Schneider Rd Taylor Pl Eagle Farm 1300 369 233

Product data sheet
Characteristics

EGX100MG
ethernet gateway - PowerLogic EGX100 - 1 Ethernet port - 24 V DC

Main

Range of product	PowerLogic EGX100
Device short name	EGX100

Complementary

Number of port	1
Device connection	Ethernet port protocol: HTTP 10/100 Mbit/s Ethernet port protocol: SNMP 10/100 Mbit/s Ethernet port protocol: FTP 10/100 Mbit/s Ethernet port protocol: Modbus TCP/IP 10/100 Mbit/s Serial port protocol: Modbus (RTU and ASCII) interface: RS232 38400/57600 bauds Serial port protocol: Modbus (RTU and ASCII) interface: RS485 38400/57600 bauds Serial port protocol: PowerLogic (SY/MAX) interface: RS232 38400/57600 bauds Serial port protocol: PowerLogic (SY/MAX) interface: RS485 38400/57600 bauds
[Us] rated supply voltage	24 V DC
Distributed supply voltage	PoE power supply 3
Mounting support	DIN rail
Width	91 mm
Height	72 mm
Depth	68 mm
Product weight	0.17 kg

Environment

Standards	AS/NZS25 60950 CSA 22.2 No 60950 EN 60950 IEC 60950 UL 508 UL 60950
Electromagnetic compatibility	Conducted RF disturbances conforming to EN 61000-4-6 Conducted and radiated emissions conforming to EN 55022/EN 55011/FCC Class A Electrostatic discharge conforming to EN 61000-4-2 Fast transients immunity test conforming to EN 61000-4-4 Immunity for industrial environments conforming to EN 61000-6-2 Magnetic field at power frequency conforming to EN 61000-4-8 Radiated RF fields conforming to EN 61000-4-3 Surges conforming to EN 61000-4-5
Ambient air temperature for operation	-25...70 °C
RoHS EUR conformity date	0624
RoHS EUR status	Compliant

The information provided in this documentation contains general descriptions and/or technical characteristics of the performance of the products contained herein.
This documentation is not intended as a substitute for and is not to be used for determining suitability or reliability of these products for specific user applications.
It is the duty of any such user or integrator to perform the appropriate and complete risk analysis, evaluation and testing of the products with respect to the relevant specific application or use thereof.
Neither Schneider Electric Industries SAS nor any of its affiliates or subsidiaries shall be responsible or liable for misuse of the information contained herein.

2.6

TECHNICAL DATA SHEET

Equipment Type:	PowerMeter
Location:	Power Distribution
Model Numbers:	METSEPM5350
Manufacturer:	Schneider
Supplier:	Schneider 80 Schneider Rd Taylor Pl Eagle Farm 1300 369 233

Product data sheet
Characteristics

METSEPM5340
PM5340 powermeter w ethernet - upto 31st H - 256K 2DI/2DO 35alarms - flush mount

Main

Range	PowerLogic
Product name	PowerLogic PM5000
Device short name	PM5340
Product or component type	Power meter

Complementary

Power quality analysis	Up to the 31st harmonic
Device application	Power monitoring Multi-tariff
Type of measurement	Active and reactive power Energy Power factor Frequency Voltage Current
Supply voltage	125...250 V DC 100...415 V AC (45...65 Hz)
Network frequency	50 Hz 60 Hz
[In] rated current	1 A 5 A
Type of network	1P + N 3P 3P + N
Power consumption in VA	10 VA at 415 V
Display type	Backlit LCD
Display resolution	128 x 128 pixels
Sampling rate	64 samples/cycle
Measurement current	10 mA...9 A
Analogue input type	Voltage (impedance 5 MOhm) Current (impedance 0.3 mOhm)
Measurement voltage	20...400 V AC 45...65 Hz between phase and neutral 35...690 V AC 45...65 Hz between phases
Frequency measurement range	45...65 Hz
Number of inputs	2 digital
Measurement accuracy	+/- 0.5 % voltage +/- 0.5 % current +/- 0.005 % power factor +/- 0.05 % frequency +/- 0.5 % apparent power +/- 0.5 % active power +/- 2 % reactive energy +/- 0.5 % active energy
Accuracy class	Class 0.5S (active energy according to IEC 62053-22)
Number of outputs	2 digital 2 relay
Information displayed	Tariff 4

The information provided in this documentation contains general descriptions and/or technical characteristics of the performance of the products contained herein.
This documentation is not intended as a substitute for and is not to be used for determining suitability or reliability of these products for specific user applications.
It is the duty of any such user or integrator to perform the appropriate and complete risk analysis, evaluation and testing of the products with respect to the relevant specific application or use thereof.
Neither Schneider Electric Industries SAS nor any of its affiliates or subsidiaries shall be responsible or liable for misuse of the information contained herein.

Communication port protocol	Modbus TCP/IP : 10/100 Mbit/s, insulation: 2500 V
Communication port support	Ethernet
Data recording	Data logs Event logs Min/Max of instantaneous values Time stamping Alarm logs Maintenance logs
Memory capacity	256 kB
Mounting mode	Flush-mounted
Mounting support	Framework
Standards	IEC 60529 IEC 61557-12 IEC 62053-22 EN 50470-1 EN 50470-3 IEC 62053-24
Product certifications	CULus conforming to UL 61010-1 CE conforming to IEC 61010-1
Width	96 mm
Depth	72 mm
Height	96 mm
Product weight	430 g

Environment

Electromagnetic compatibility	• conducted and radiated emissions class class B, conforming to EN 55022 • magnetic field at power frequency class level 4, conforming to IEC 61000-4-8 • conducted RF disturbances class level 3, conforming to IEC 61000-4-6 • electrostatic discharge class level 4, conforming to IEC 61000-4-2 • limits for harmonic current emissions class class A, conforming to IEC 61000-3-2
IP degree of protection	IP30 (body) conforming to IEC 60529 IP52 (front) conforming to IEC 60529
Relative humidity	5...95 % 50 °C
Pollution degree	2
Ambient air temperature for operation	-25...70 °C
Ambient air temperature for storage	-40...85 °C
Operating altitude	2000 m

2.7

TECHNICAL DATA SHEET

Equipment Type:	Power Supply
Location:	Power Distribution
Model Numbers:	2902991
Manufacturer:	Phoenix Contact
Supplier:	2/20 Graystone Street, Tingalpa QLD 4173 Phone:(07) 3890 4255

https://www.phoenixcontact.com/au/products/2902991

Power supply unit - UNO-PS/1AC/24DC/ 30W - 2902991

Please be informed that the data shown in this PDF Document is generated from our Online Catalog. Please find the complete data in the user's documentation. Our General Terms of Use for Downloads are valid
(http://phoenixcontact.com/download)

Primary-switched UNO POWER power supply for DIN rail mounting, input: 1-phase, output: 24 V DC/30 W

Product description

UNO POWER power supplies with basic functionality
Thanks to their high power density, compact UNO POWER power supplies are the ideal solution for loads up to 100 W, particularly in compact control boxes. The power supply units are available in various performance classes and overall widths. Their high degree of efficiency and low idling losses ensure a high level of energy efficiency.

Why buy this product

- Flexible mounting by simply snapping onto the DIN rail
- More space in the control cabinet with up to 20 % higher power density
- Maximum energy efficiency, thanks to over 90 % efficiency and extremely low idling losses under 0.3 W

Key commercial data

Packing unit	1 pc
GTIN	4 046356 729192
Weight per Piece (excluding packing)	150.0 g
Custom tariff number	85044030
Country of origin	Germany

Technical data

Dimensions

Width	22.5 mm
Height	90 mm
Depth	84 mm

Ambient conditions

Degree of protection	IP20
Ambient temperature (operation)	-25 °C ... 70 °C (> 55° C derating : 2.5%/K)
Ambient temperature (storage/transport)	-40 °C ... 85 °C

Power supply unit - UNO-PS/1AC/24DC/ 30W - 2902991

Technical data

Ambient conditions

Max. permissible relative humidity (operation)	≤ 95 % (at 25 °C, non-condensing)
Noise immunity	EN 61000-6-2:2005

Input data

Nominal input voltage range	100 V AC ... 240 V AC
Input voltage range	85 V AC ... 264 V AC
AC frequency range	45 Hz ... 65 Hz
Inrush surge current	< 20 A (typical)
Power failure bypass	> 25 ms (120 V AC)
	> 115 ms (230 V AC)
Input fuse	2 A (slow-blow, internal)
Choice of suitable fuses	6 A ... 16 A (Characteristics B, C, D, K)
Type of protection	Transient surge protection
Protective circuit/component	Varistor

Output data

Nominal output voltage	24 V DC ±1 %
Nominal output current	1.25 A (-25°C ... 55°C)
Derating	55 °C ... 70 °C (2.5%/K)
Connection in parallel	Yes, for redundancy and increased capacity
Connection in series	Yes
Control deviation	< 1 % (change in load, static 10 % ... 90 %)
	< 2 % (Dynamic load change 10 % ... 90 %, 10 Hz)
	< 0.1 % (change in input voltage ±10 %)
Residual ripple	< 60 mV_{PP} (with nominal values)
Maximum power dissipation NO-Load	< 0.3 W
Power loss nominal load max.	< 5 W

General

Net weight	0.15 kg
Efficiency	> 88 % (for 230 V AC and nominal values)
Insulation voltage input/output	4 kV AC (type test)
	3 kV AC (routine test)
Protection class	II (in closed control cabinet)
	> 1158000 h (40°C)
Mounting position	horizontal DIN rail NS 35, EN 60715
Assembly instructions	Alignable: 0 mm horizontally, 30 mm vertically
Electromagnetic compatibility	Conformance with EMC Directive 2004/108/EC
Low Voltage Directive	Conformance with LV directive 2006/95/EC
Standard – Electrical equipment of machines	EN 60204-1
Standard - Electrical safety	IEC 60950-1/VDE 0805 (SELV)
Standard – Electronic equipment for use in electrical power installations and their assembly into electrical power installations	EN 50178/VDE 0160 (PELV)

Power supply unit - UNO-PS/1AC/24DC/ 30W - 2902991

Technical data

General

Standard – Safety extra-low voltage	IEC 60950-1 (SELV) and EN 60204 (PELV)
Standard - Safe isolation	DIN VDE 0100-410
Standard – Protection against electric shock	DIN 57100-410
Standard – Limitation of mains harmonic currents	EN 61000-3-2
Approval - requirement of the semiconductor industry with regard to mains voltage dips	EN 61000-4-11
Information technology equipment - safety (CB scheme)	CB Scheme
UL approvals	UL/C-UL listed UL 508
	UL/C-UL Recognized UL 60950
	NEC Class 2 as per UL 1310

Connection data, input

Connection method	Screw connection
Conductor cross section solid min.	0.2 mm²
Conductor cross section solid max.	2.5 mm²
Conductor cross section stranded min.	0.2 mm²
Conductor cross section stranded max.	2.5 mm²
Conductor cross section AWG min.	24
Conductor cross section AWG max.	14
Stripping length	8 mm
Screw thread	M3

Connection data, output

Connection method	Screw connection
Conductor cross section solid min.	0.2 mm²
Conductor cross section solid max.	2.5 mm²
Conductor cross section stranded min.	0.2 mm²
Conductor cross section stranded max.	2.5 mm²
Conductor cross section AWG min.	24
Conductor cross section AWG max.	14
Stripping length	8 mm
Screw thread	M3

Signaling

Output name	LED status indicator

Classifications

eCl@ss

eCl@ss 4.0	27040702
eCl@ss 4.1	27040702
eCl@ss 5.0	27049002
eCl@ss 5.1	27049002

Power supply unit - UNO-PS/1AC/24DC/ 30W - 2902991

Classifications

eCl@ss

eCl@ss 6.0	27049002
eCl@ss 7.0	27049002
eCl@ss 8.0	27049002

ETIM

ETIM 3.0	EC001039
ETIM 4.0	EC000599
ETIM 5.0	EC002540

UNSPSC

UNSPSC 6.01	30211502
UNSPSC 7.0901	39121004
UNSPSC 11	39121004
UNSPSC 12.01	39121004
UNSPSC 13.2	39121004

Approvals

Approvals

Approvals

UL Recognized / UL Listed / cUL Recognized / cUL Listed / IECEE CB Scheme / EAC / EAC / cULus Recognized / cULus Listed

Ex Approvals

Approvals submitted

Approval details

UL Recognized

UL Listed

cUL Recognized

https://www.phoenixcontact.com/au/products/2902991

Power supply unit - UNO-PS/1AC/24DC/ 30W - 2902991

Approvals

cUL Listed

IECEE CB Scheme

EAC

EAC

cULus Recognized

cULus Listed

Drawings

Block diagram

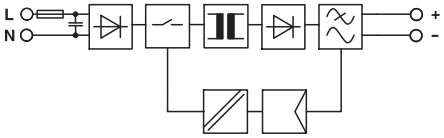

Phoenix Contact 2015 © - all rights reserved
http://www.phoenixcontact.com

3. DRAWINGS

QUEENSLAND UrbanUtilities

LUGGAGE POINT STP
MAIN AUXILARY SWITCHBOARD
SITE COVER SHEET

DRAWING LIST FOR ELECTRICAL DRAWINGS

DWG No.	TITLE
486/5/5-0275 - 100	DRAWING INDEX COVER SHEET
486/5/5-0275 - 101	SINGLE LINE DIAGRAM
486/5/5-0275 - 102	MAIN SWITCH 1 SCHEMATIC
486/5/5-0275 - 103	MAIN SWITCH 2 SCHEMATIC
486/5/5-0275 - 104	MAIN SWITCH 3 SCHEMATIC
486/5/5-0275 - 105	DIGESTION FEEDER SCHEMATIC
486/5/5-0275 - 110	SWITCHBOARD - GENERAL ARRANGEMENT SHEET 1 OF 9
486/5/5-0275 - 111	SWITCHBOARD - GENERAL ARRANGEMENT SHEET 2 OF 9
486/5/5-0275 - 112	SWITCHBOARD - GENERAL ARRANGEMENT SHEET 3 OF 9
486/5/5-0275 - 113	SWITCHBOARD - GENERAL ARRANGEMENT SHEET 4 OF 9
486/5/5-0275 - 114	SWITCHBOARD - GENERAL ARRANGEMENT SHEET 5 OF 9
486/5/5-0275 - 115	SWITCHBOARD - GENERAL ARRANGEMENT SHEET 6 OF 9
486/5/5-0275 - 116	SWITCHBOARD - GENERAL ARRANGEMENT SHEET 7 OF 9
486/5/5-0275 - 117	SWITCHBOARD - GENERAL ARRANGEMENT SHEET 8 OF 9
486/5/5-0275 - 118	SWITCHBOARD - GENERAL ARRANGEMENT SHEET 9 OF 9
486/5/5-0275 - 119	SWITCHBOARD - LABEL SCHEDULE SHEET 1 OF 2
486/5/5-0275 - 120	SWITCHBOARD - LABEL SCHEDULE SHEET 2 OF 2
486/5/5-0275 - 121	SWITCHBOARD - EQUIPMENT SCHEDULE

AS CONSTRUCTED DETAILS

I CERTIFY THAT THE "AS CONSTRUCTED" DETAILS SHOWN ON THIS PLAN ARE A TRUE AND ACCURATE RECORD OF THE WORKS.

SIGNED: DATE: 17-04-15
NAME of SIGNATORY: ANDY WALMSLEY
RPEQ No. or LICENCE: A30723
COMPANY NAME: SJ ELECTRIC
START DATE: FINISH DATE:

SJ ELECTRIC QUEENSLAND
19 ELLIOT ST, ALBION QLD 4010
P 07 3256 1522 F 07 3256 1533
Email@sjelectric.com.au ABN 45 124 414 768
www.trivantage.com.au REC 73286
TRIVANTAGE A DIVISION OF THE TRIVANTAGE GROUP

NAME SIGNATURE DATE
QUEENSLAND URBAN UTILITIES DELEGATE
(AUTHORISED FOR 12 MONTHS FROM DATE SHOWN)
QUEENSLAND UrbanUtilities

No.	DATE	AMENDMENT	DRAFTED	DESIGNED	RPEQ NO.	APPROVED
2	12/15	REVISED AS CONSTRUCTED	H.G	H.G		
1	03/15	AS CONSTRUCTED	H.G	H.G		
0	03/15	FOR CONSTRUCTION	H.G	H.G		

FUNDING: DESIGN W.O. No. / CONSTRUCTION W.O. No. / FUNDED BY Q.U.U. (✓) EXTERNAL ( )

DRAFTED M.COOGAN; DRAFTING CHECK H.GARDNER; CAD FILE 486_5_5-0275-001; Q.U.U. FILE No.

M.COOGAN 18/12/14 DESIGN R.P.E.Q. No. DATE
H.GARDNER 18/12/14 DESIGN CHECK R.P.E.Q. No. DATE

APPROVED BY SIGNATURE DATE
CONSTRUCTION MANAGER SIGNATURE DATE

ASSET/PROJECT: LUGGAGE POINT SEWAGE TREATMENT PLANT

DRAWING TITLE: ELECTRICAL DRAWING INDEX

SHEET No. 1 OF 1
QUEENSLAND URBAN UTILITIES DRAWING No. 486/5/5-0275-100
AMEND. 2

NOTES

1. EACH INCOMER ACB TO HAVE AN AUX CONTACT INTERLOCKED WITH THE RESPECTIVE 11kV FEEDER.
2. SHUNT TRIP FROM CONTROL ROOM EMERGENCY STOP.
3. GROUND FAULT CT'S INSTALLED ON INCOMER MAIN SWITCHES.
4. KEY INTERLOCK SWITCHING SCENARIOS ARE AS FOLLOWS:

X = CLOSED 0 = OPEN	INCOMER 1 KEY A	BUS TIE 1 KEY A OR KEY B	INCOMER 2 KEY B	BUS TIE 2 KEY B OR KEY C	INCOMER 3 KEY C
NORMAL	X	0	X	0	X
TX 1 OFFLINE	0	X	X	0	X
TX 2 OFFLINE	X	X	0	0	X
TX 3 OFFLINE	X	0	X	X	0

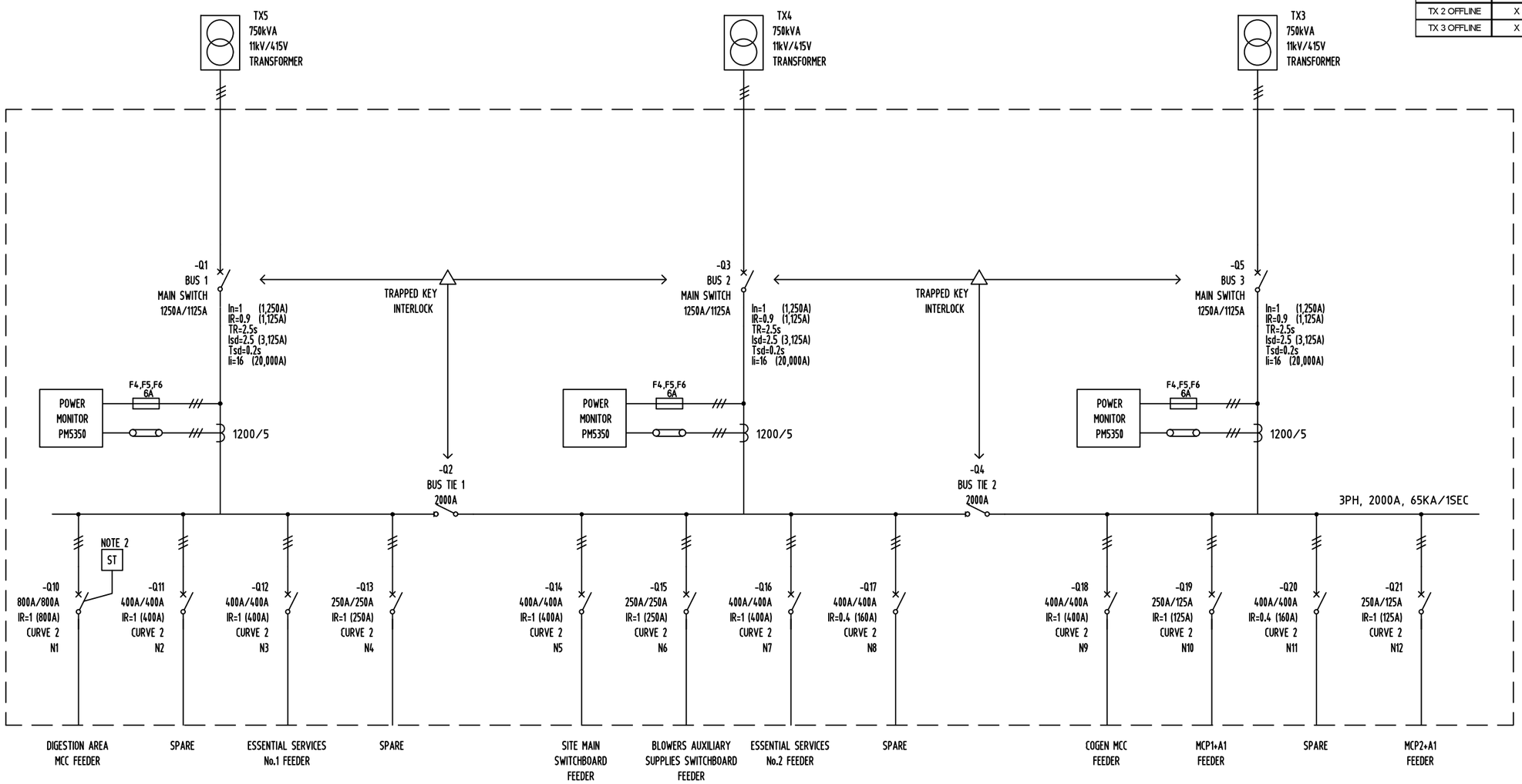

AS CONSTRUCTED DETAILS

I CERTIFY THAT THE "AS CONSTRUCTED" DETAILS SHOWN ON THIS PLAN ARE A TRUE AND ACCURATE RECORD OF THE WORKS.

SIGNED: DATE: 17-04-15
NAME of SIGNATORY: ANDY WALMSLEY
RPEQ No. or LICENCE: A30723
COMPANY NAME: SJ ELECTRIC
START DATE: FINISH DATE:

SJ ELECTRIC QUEENSLAND
19 ELLIOT ST, ALBION QLD 4010
P 07 3256 1522 F 07 3256 1533
Email@sjelectric.com.au ABN 45 124 414 768
www.trivantage.com.au REC 73286
TRIVANTAGE A DIVISION OF THE TRIVANTAGE GROUP

NAME SIGNATURE DATE
QUEENSLAND URBAN UTILITIES DELEGATE
(AUTHORISED FOR 12 MONTHS FROM DATE SHOWN)
QUEENSLAND Urban Utilities

No.	DATE	AMENDMENT	DRAFTED	DESIGNED	RPEQ NO.	APPROVED
2	04/15	REVISED AS CONSTRUCTED	E.Y	H.G		
1	03/15	AS CONSTRUCTED	E.Y	H.G		
0	01/15	ISSUED FOR CONSTRUCTION	H.G	H.G	14158	

FUNDING
DESIGN W.O. No.
CONSTRUCTION W.O. No.
FUNDED BY Q.U.U. (✓) EXTERNAL ( )

DRAFTED	M.COOGAN		
DRAFTING CHECK	H.GARDNER		
CAD FILE	486_5_5-0275-110		
Q.U.U. FILE No.			
M.COOGAN			18/12/14
DESIGN		R.P.E.Q. No.	DATE
H.GARDNER		14158	18/12/14
DESIGN CHECK		R.P.E.Q. No.	DATE

APPROVED BY SIGNATURE DATE
CONSTRUCTION MANAGER SIGNATURE DATE

ASSET/PROJECT
LUGGAGE POINT SEWAGE TREATMENT PLANT

DRAWING TITLE
MAIN AUXILARY SWITCHBOARD SINGLE LINE DIAGRAM

SHEET No. 1 OF 1
QUEENSLAND URBAN UTILITIES DRAWING No. 486/5/5-0275-101
AMEND. 2

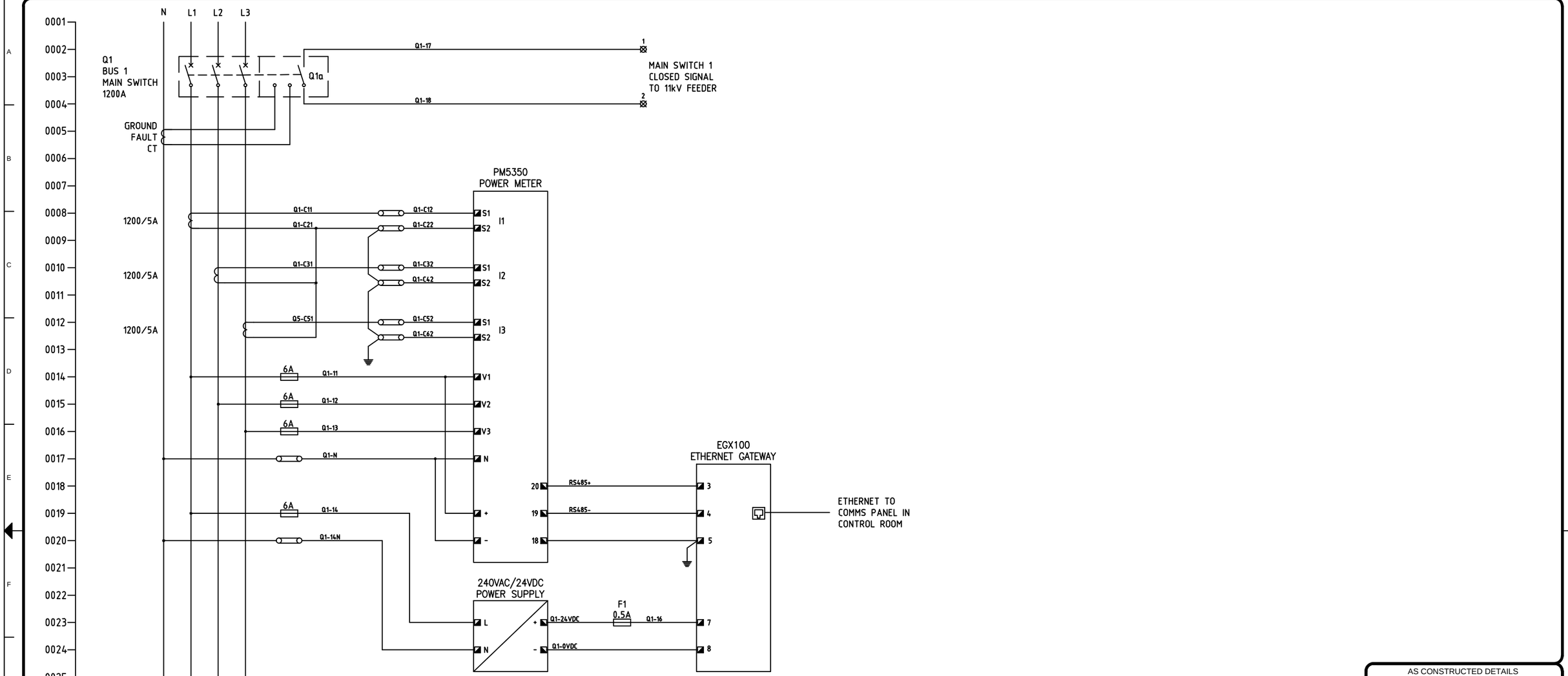

AS CONSTRUCTED DETAILS

I CERTIFY THAT THE "AS CONSTRUCTED" DETAILS SHOWN ON THIS PLAN ARE A TRUE AND ACCURATE RECORD OF THE WORKS.

SIGNED: DATE: 17-04-15

NAME of SIGNATORY: ANDY WALMSLEY

RPEQ No. or LICENCE: A30723

COMPANY NAME: SJ ELECTRIC

START DATE: FINISH DATE:

SJ ELECTRIC QUEENSLAND

19 ELLIOT ST, ALBION QLD 4010
P 07 3256 1522 F 07 3256 1533
Email@sjelectric.com.au ABN 45 124 414 768
www.trivantage.com.au REC 73286
TRIVANTAGE A DIVISION OF THE TRIVANTAGE GROUP

NAME SIGNATURE DATE

QUEENSLAND URBAN UTILITIES DELEGATE
(AUTHORISED FOR 12 MONTHS FROM DATE SHOWN)

QUEENSLAND UrbanUtilities

No.	DATE	AMENDMENT	DRAFTED	DESIGNED	RPEQ NO.	APPROVED
1	03/15	AS CONSTRUCTED	E.Y	H.G		
0	01/15	ISSUED FOR CONSTRUCTION	H.G	H.G	14158	
A	12/14	ISSUED FOR APPROVAL	H.G	H.G		

FUNDING
DESIGN W.O. No.
CONSTRUCTION W.O. No.
FUNDED BY Q.U.U. (✓) EXTERNAL ( )

DRAFTED	M.COOGAN	18/12/14
DRAFTING CHECK	H.GARDNER	
CAD FILE	486_5_5-0275-110	
Q.U.U. FILE No.		

M.COOGAN		18/12/14
DESIGN	R.P.E.Q. No.	DATE
H.GARDNER	14158	18/12/14
DESIGN CHECK	R.P.E.Q. No.	DATE

APPROVED BY SIGNATURE DATE
CONSTRUCTION MANAGER SIGNATURE DATE

ASSET/PROJECT
LUGGAGE POINT SEWAGE TREATMENT PLANT

DRAWING TITLE
MAIN AUXILARY SWBD MAIN SWITCH 1 SCHEMATIC

SHEET No. 1 OF 1
QUEENSLAND URBAN UTILITIES DRAWING No. 486/5/5-0275-102
AMEND. 1

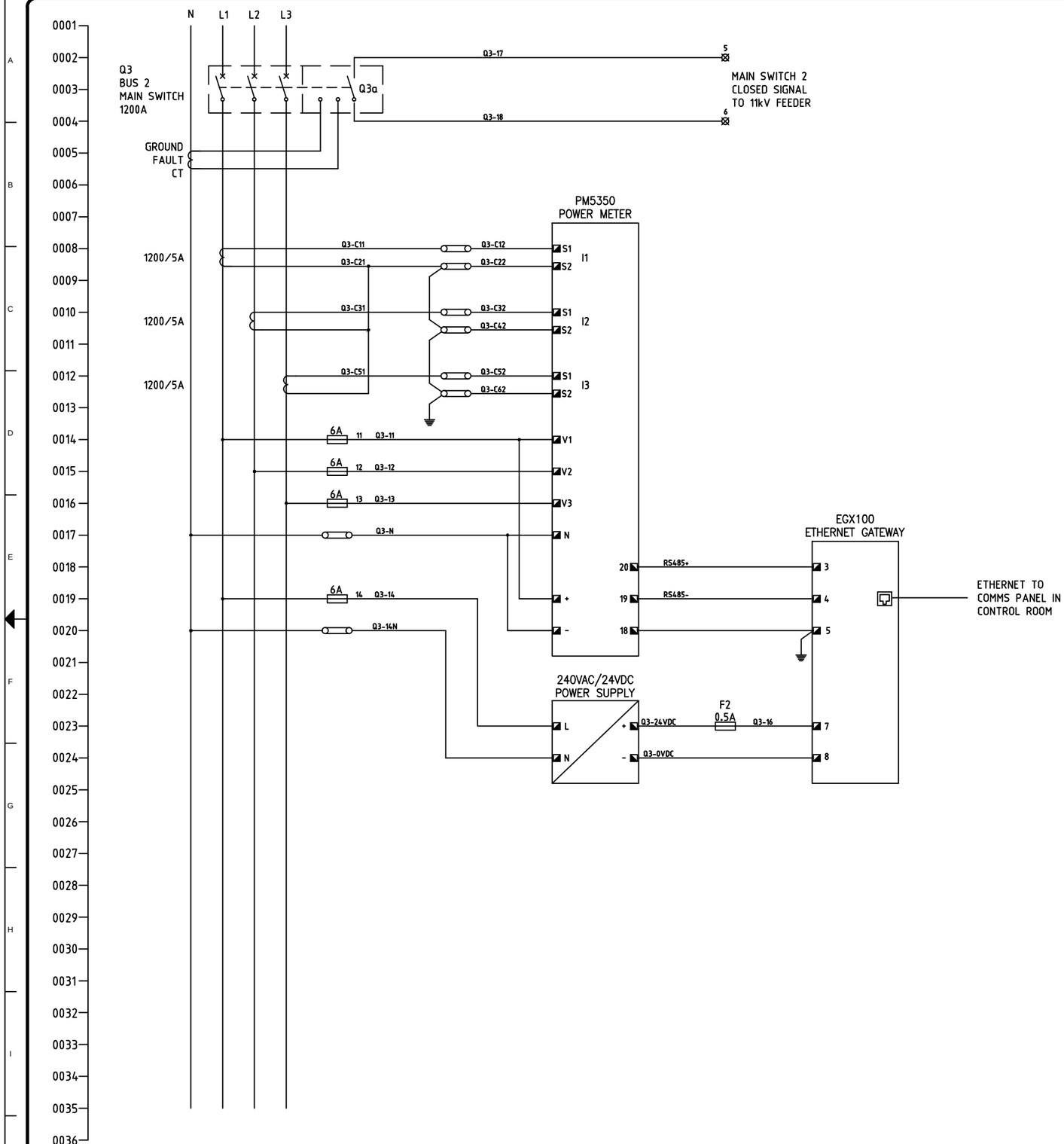

AS CONSTRUCTED DETAILS

I CERTIFY THAT THE "AS CONSTRUCTED" DETAILS SHOWN ON THIS PLAN ARE A TRUE AND ACCURATE RECORD OF THE WORKS.

SIGNED: DATE: 17-04-15

NAME of SIGNATORY: ANDY WALMSLEY

RPEQ No. or LICENCE: A30723

COMPANY NAME: SJ ELECTRIC

START DATE: FINISH DATE:

SJ ELECTRIC QUEENSLAND

19 ELLIOT ST, ALBION QLD 4010
P 07 3256 1522 F 07 3256 1533
Email@sjelectric.com.au ABN 45 124 414 768
www.trivantage.com.au REC 73286
TRIVANTAGE A DIVISION OF THE TRIVANTAGE GROUP

NAME SIGNATURE DATE

QUEENSLAND URBAN UTILITIES DELEGATE
(AUTHORISED FOR 12 MONTHS FROM DATE SHOWN)

QUEENSLAND UrbanUtilities

No.	DATE	AMENDMENT	DRAFTED	DESIGNED	RPEQ NO.	APPROVED
1	03/15	AS CONSTRUCTED	E.Y	H.G		
0	01/15	ISSUED FOR CONSTRUCTION	H.G	H.G	14158	
A	12/14	ISSUED FOR APPROVAL	H.G	H.G		

FUNDING
DESIGN W.O. No.
CONSTRUCTION W.O. No.
FUNDED BY Q.U.U. (✓) EXTERNAL ( )

DRAFTED	M.COOGAN	18/12/14
DRAFTING CHECK	H.GARDNER	
CAD FILE	486_5_5-0275-110	
Q.U.U. FILE No.		

M.COOGAN		18/12/14
DESIGN	R.P.E.Q. No.	DATE
H.GARDNER	14158	18/12/14
DESIGN CHECK	R.P.E.Q. No.	DATE

APPROVED BY SIGNATURE DATE
CONSTRUCTION MANAGER SIGNATURE DATE

ASSET/PROJECT
LUGGAGE POINT SEWAGE TREATMENT PLANT

DRAWING TITLE
MAIN AUXILARY SWBD MAIN SWITCH 2 SCHEMATIC

SHEET No. 1 OF 1
QUEENSLAND URBAN UTILITIES DRAWING No. 486/5/5-0275-103
AMEND. 1

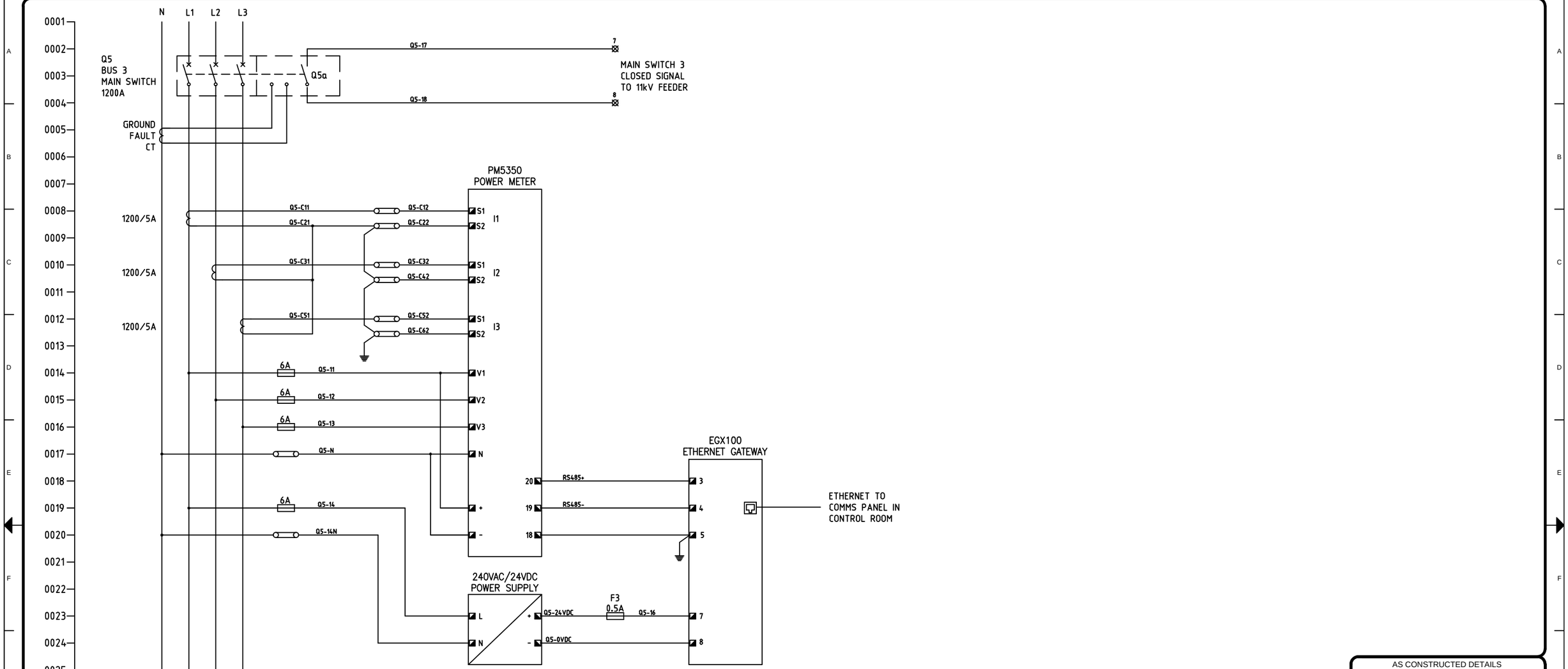

AS CONSTRUCTED DETAILS

I CERTIFY THAT THE "AS CONSTRUCTED" DETAILS SHOWN ON THIS PLAN ARE A TRUE AND ACCURATE RECORD OF THE WORKS.

SIGNED: DATE: 17-04-15

NAME of SIGNATORY: ANDY WALMSLEY

RPEQ No. or LICENCE: A30723

COMPANY NAME: SJ ELECTRIC

START DATE: FINISH DATE:

SJ ELECTRIC QUEENSLAND
19 ELLIOT ST, ALBION QLD 4010
P 07 3256 1522 F 07 3256 1533
Email@sjelectric.com.au ABN 45 124 414 768
www.trivantage.com.au REC 73286
TRIVANTAGE A DIVISION OF THE TRIVANTAGE GROUP

NAME SIGNATURE DATE

QUEENSLAND URBAN UTILITIES DELEGATE
(AUTHORISED FOR 12 MONTHS FROM DATE SHOWN)

QUEENSLAND UrbanUtilities

No.	DATE	AMENDMENT	DRAFTED	DESIGNED	RPEQ NO.	APPROVED
1	03/15	AS CONSTRUCTED	E.Y	H.G		
0	01/15	ISSUED FOR CONSTRUCTION	H.G	H.G	14158	
A	12/14	ISSUED FOR APPROVAL	H.G	H.G		

FUNDING
DESIGN W.O. No.
CONSTRUCTION W.O. No.
FUNDED BY Q.U.U. (✓) EXTERNAL ( )

DRAFTED	M.COOGAN	18/12/14
DRAFTING CHECK	H.GARDNER	
CAD FILE	486_5_5-0275-110	
Q.U.U. FILE No.		

M.COOGAN			18/12/14
DESIGN	R.P.E.Q. No.	DATE	
H.GARDNER	14158	18/12/14	
DESIGN CHECK	R.P.E.Q. No.	DATE	

APPROVED BY SIGNATURE DATE
CONSTRUCTION MANAGER SIGNATURE DATE

ASSET/PROJECT
LUGGAGE POINT SEWAGE TREATMENT PLANT

DRAWING TITLE
MAIN AUXILARY SWBD MAIN SWITCH 3 SCHEMATIC

SHEET No. 1 OF 1

QUEENSLAND URBAN UTILITIES DRAWING No. 486/5/5-0275-104

AMEND. 1

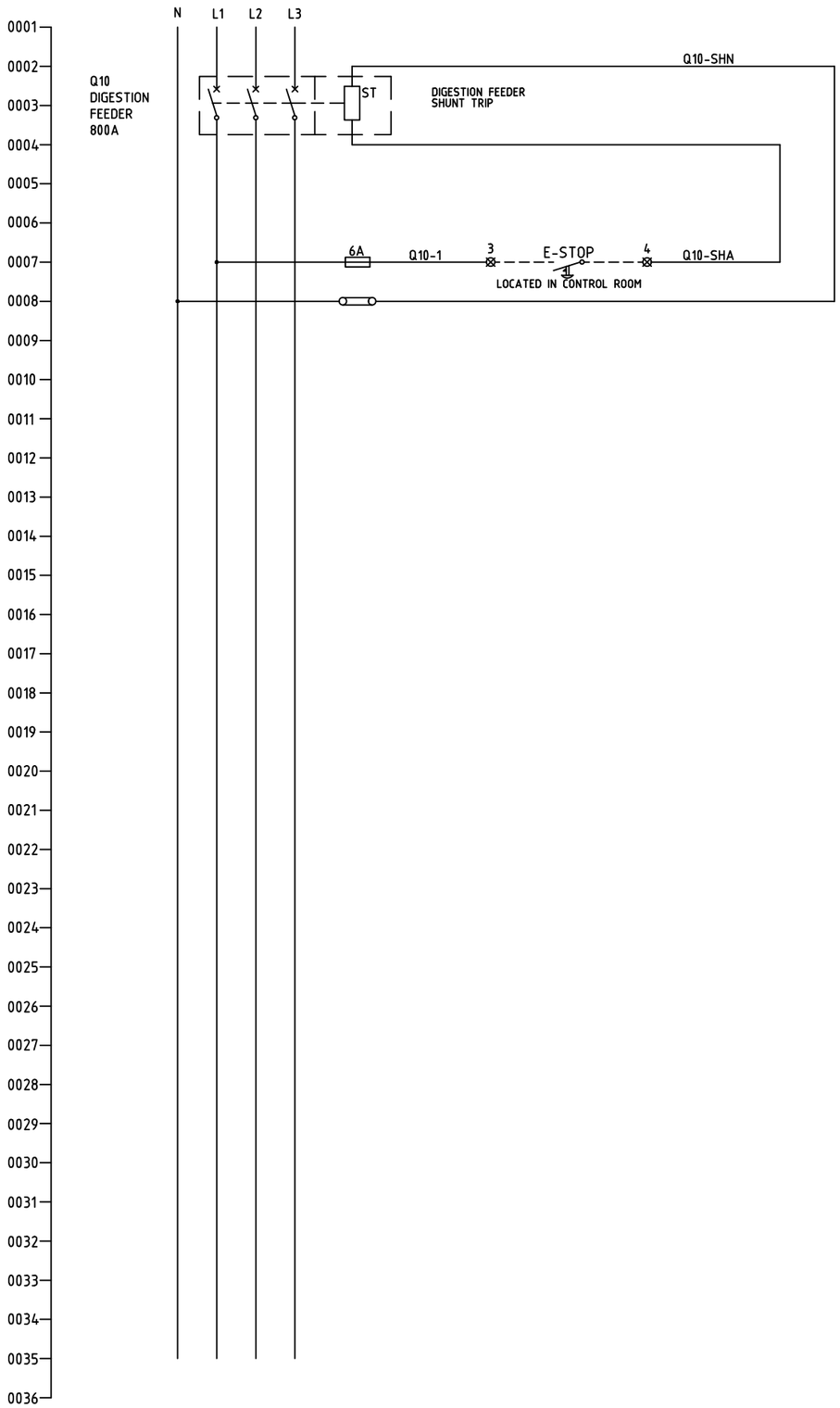

AS CONSTRUCTED DETAILS

I CERTIFY THAT THE "AS CONSTRUCTED" DETAILS SHOWN ON THIS PLAN ARE A TRUE AND ACCURATE RECORD OF THE WORKS.

SIGNED: DATE: 17-04-15

NAME of SIGNATORY: ANDY WALMSLEY

RPEQ No. or LICENCE: A30723

COMPANY NAME: SJ ELECTRIC

START DATE: FINISH DATE:

SJ ELECTRIC QUEENSLAND

19 ELLIOT ST, ALBION QLD 4010
P 07 3256 1522 F 07 3256 1533
Email@sjelectric.com.au ABN 45 124 414 768
www.trivantage.com.au REC 73286
TRIVANTAGE A DIVISION OF THE TRIVANTAGE GROUP

NAME SIGNATURE DATE

QUEENSLAND URBAN UTILITIES DELEGATE
(AUTHORISED FOR 12 MONTHS FROM DATE SHOWN)

QUEENSLAND Urban Utilities

No.	DATE	AMENDMENT	DRAFTED	DESIGNED	RPEQ NO.	APPROVED
1	03/15	AS CONSTRUCTED	E.Y	H.G		
0	01/15	ISSUED FOR CONSTRUCTION	H.G	H.G	14158	
A	12/14	ISSUED FOR APPROVAL	H.G	H.G		

FUNDING	
DESIGN W.O. No.	
CONSTRUCTION W.O. No.	
FUNDED BY Q.U.U. (✓)	EXTERNAL ( )

DRAFTED	M.COOGAN
DRAFTING CHECK	H.GARDNER
CAD FILE	486_5_5-0275-110
Q.U.U. FILE No.	

M.COOGAN		18/12/14
DESIGN	R.P.E.Q. No.	DATE
H.GARDNER	14158	18/12/14
DESIGN CHECK	R.P.E.Q. No.	DATE

APPROVED BY	SIGNATURE	DATE
CONSTRUCTION MANAGER	SIGNATURE	DATE

ASSET/PROJECT
LUGGAGE POINT SEWAGE TREATMENT PLANT

DRAWING TITLE
MAIN AUXILARY SWBD DIGESTION FEEDER SCHEMATIC

SHEET No. 1 OF 1

QUEENSLAND URBAN UTILITIES DRAWING No. 486/5/5-0275-105

AMEND. 1

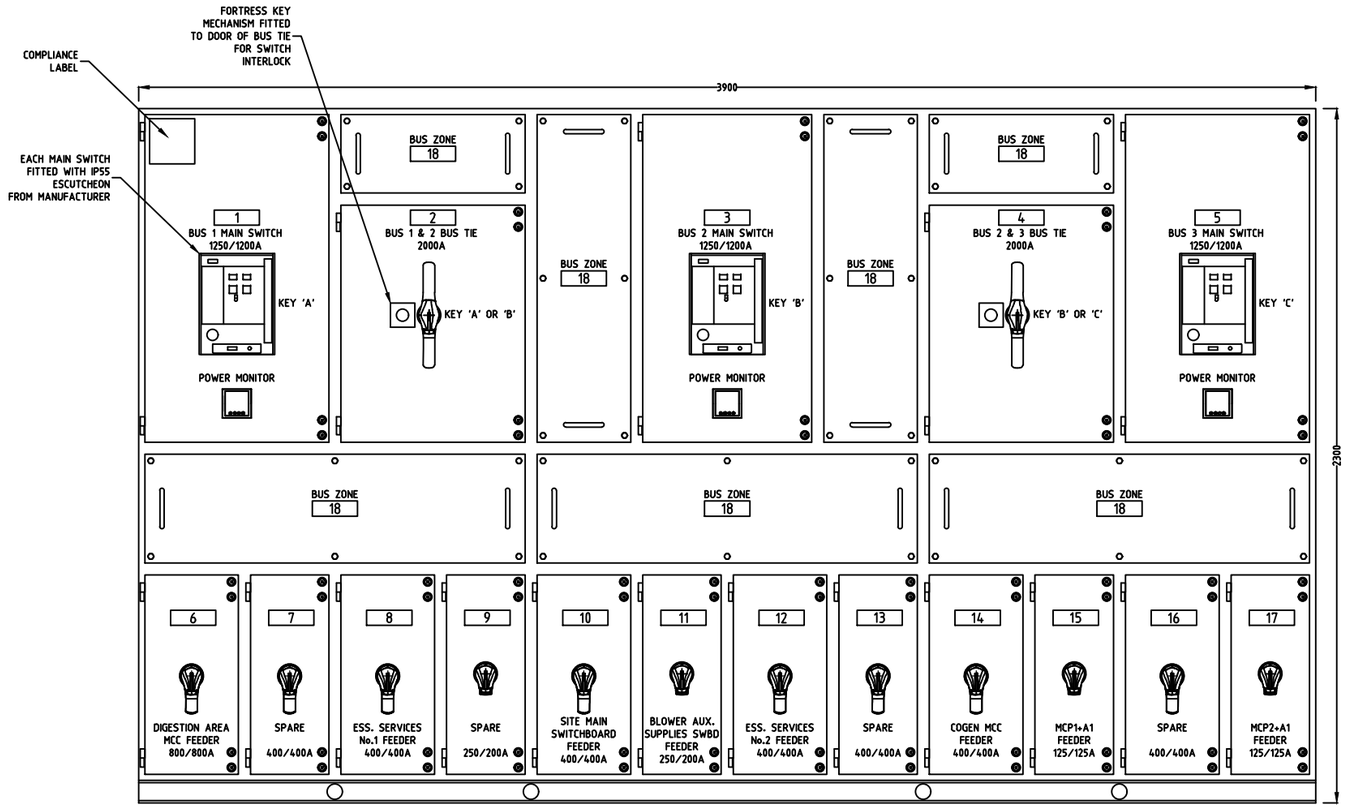

FRONT VIEW
N.T.S

AS CONSTRUCTED DETAILS

I CERTIFY THAT THE "AS CONSTRUCTED" DETAILS SHOWN ON THIS PLAN ARE A TRUE AND ACCURATE RECORD OF THE WORKS.

SIGNED: DATE: 17-04-15
NAME of SIGNATORY: ANDY WALMSLEY
RPEQ No. or LICENCE: A30723
COMPANY NAME: SJ ELECTRIC
START DATE: FINISH DATE:

SJ ELECTRIC QUEENSLAND
19 ELLIOT ST, ALBION QLD 4010
P 07 3256 1522 F 07 3256 1533
Email@sjelectric.com.au ABN 45 124 414 768
www.trivantage.com.au REC 73286
TRIVANTAGE A DIVISION OF THE TRIVANTAGE GROUP

NAME SIGNATURE DATE
QUEENSLAND URBAN UTILITIES DELEGATE
(AUTHORISED FOR 12 MONTHS FROM DATE SHOWN)
QUEENSLAND Urban Utilities

No.	DATE	AMENDMENT	DRAFTED	DESIGNED	RPEQ NO.	APPROVED
1	03/15	AS CONSTRUCTED	E.Y	H.G		
0	01/15	ISSUED FOR CONSTRUCTION	M.C	M.C	14158	
C	01/15	REISSUED FOR APPROVAL	M.C	M.C		H.G

FUNDING
DESIGN W.O. No.
CONSTRUCTION W.O. No.
FUNDED BY Q.U.U. (✓) EXTERNAL ( )

DRAFTED	M.COOGAN	
DRAFTING CHECK	H.GARDNER	
CAD FILE	486_5_5-0275-110	
Q.U.U. FILE No.		

M.COOGAN		18/12/14
DESIGN	R.P.E.Q. No.	DATE
H.GARDNER	14158	18/12/14
DESIGN CHECK	R.P.E.Q. No.	DATE

APPROVED BY SIGNATURE DATE
CONSTRUCTION MANAGER SIGNATURE DATE

ASSET/PROJECT
LUGGAGE POINT SEWAGE TREATMENT PLANT

DRAWING TITLE
MAIN AUXILIARY SWITCHBOARD GENERAL ARRANGEMENT

SHEET No. 1 OF 9
QUEENSLAND URBAN UTILITIES DRAWING No. 486/5/5-0275-110
AMEND. 1

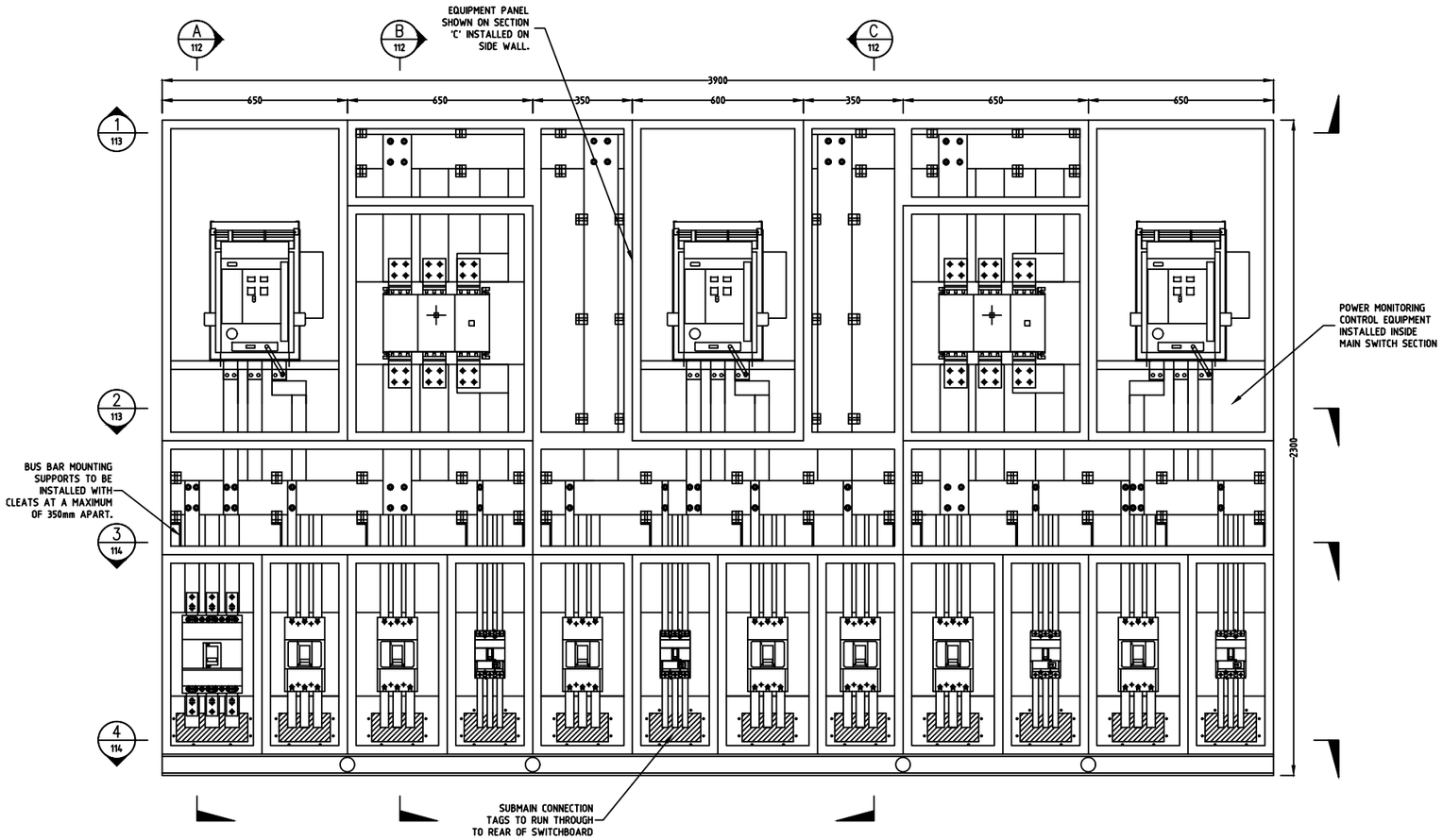

FRONT VIEW
N.T.S
DOORS REMOVED

AS CONSTRUCTED DETAILS

I CERTIFY THAT THE "AS CONSTRUCTED" DETAILS SHOWN ON THIS PLAN ARE A TRUE AND ACCURATE RECORD OF THE WORKS.

SIGNED: DATE: 17-04-15
NAME of SIGNATORY: ANDY WALMSLEY
RPEQ No. or LICENCE: A30723
COMPANY NAME: SJ ELECTRIC
START DATE: FINISH DATE:

SJ ELECTRIC QUEENSLAND
19 ELLIOT ST, ALBION QLD 4010
P 07 3256 1522 F 07 3256 1533
Email@sjelectric.com.au ABN 45 124 414 768
www.trivantage.com.au REC 73286
TRIVANTAGE A DIVISION OF THE TRIVANTAGE GROUP

NAME SIGNATURE DATE
QUEENSLAND URBAN UTILITIES DELEGATE
(AUTHORISED FOR 12 MONTHS FROM DATE SHOWN)
QUEENSLAND UrbanUtilities

No.	DATE	AMENDMENT	DRAFTED	DESIGNED	RPEQ NO.	APPROVED
1	03/15	AS CONSTRUCTED	E.Y	H.G		
0	01/15	ISSUED FOR CONSTRUCTION	M.C	M.C	14158	
C	01/15	REISSUED FOR APPROVAL	M.C	M.C		H.G

FUNDING	
DESIGN W.O. No.	
CONSTRUCTION W.O. No.	
FUNDED BY Q.U.U. (✓)	EXTERNAL ( )

DRAFTED	M.COOGAN	
DRAFTING CHECK	H.GARDNER	
CAD FILE	486_5_5-0275-110	
Q.U.U. FILE No.		

M.COOGAN		18/12/14
DESIGN	R.P.E.Q. No.	DATE
H.GARDNER	14158	18/12/14
DESIGN CHECK	R.P.E.Q. No.	DATE

APPROVED BY	SIGNATURE	DATE
CONSTRUCTION MANAGER	SIGNATURE	DATE

ASSET/PROJECT
LUGGAGE POINT SEWAGE TREATMENT PLANT

DRAWING TITLE
MAIN AUXILIARY SWITCHBOARD GENERAL ARRANGEMENT

SHEET No. 2 OF 9
QUEENSLAND URBAN UTILITIES DRAWING No. 486/5/5-0275-111
AMEND. 1

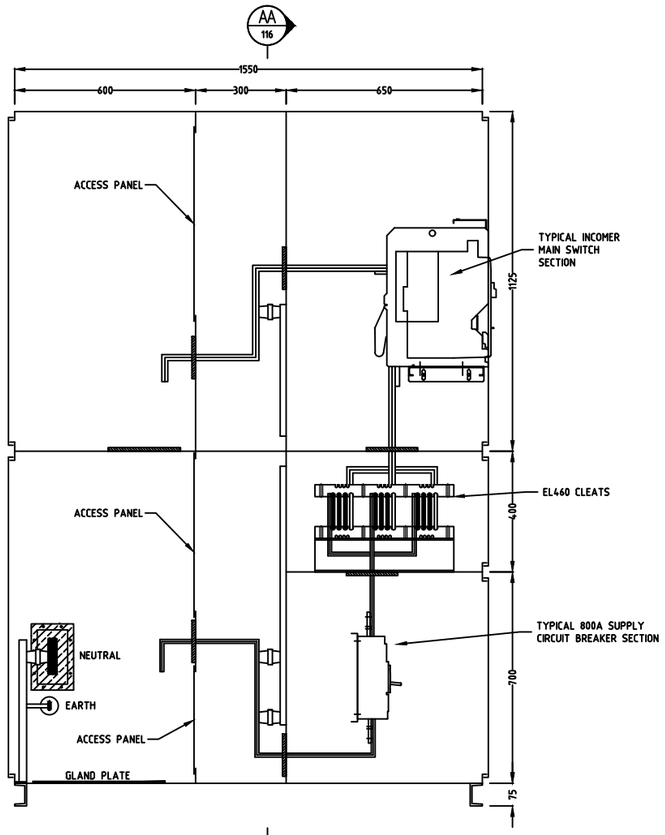

SECTION A
N.T.S 111

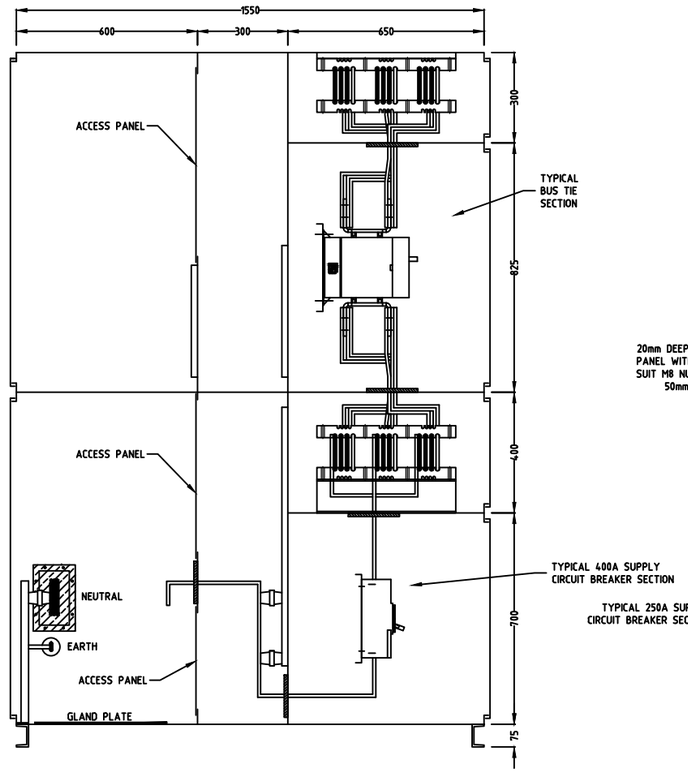

SECTION B
N.T.S 111

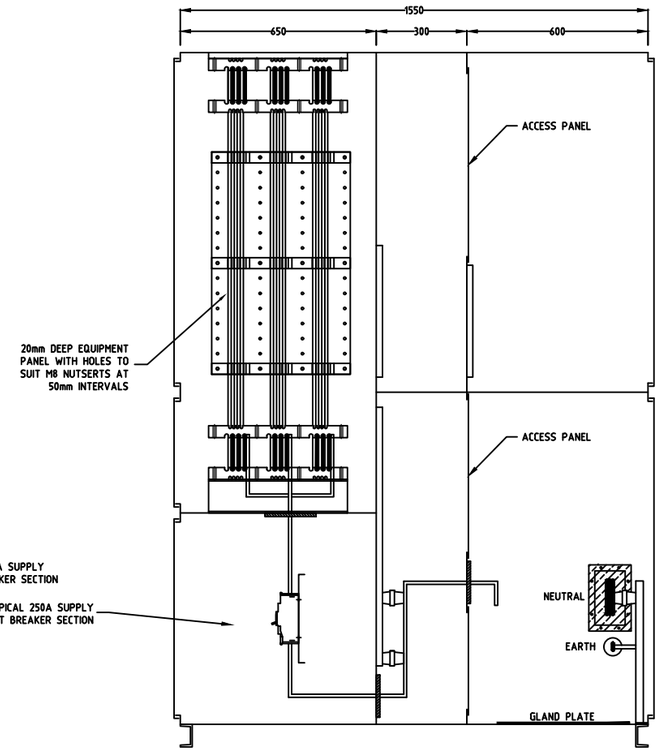

SECTION C
N.T.S 111

AS CONSTRUCTED DETAILS

I CERTIFY THAT THE "AS CONSTRUCTED" DETAILS SHOWN ON THIS PLAN ARE A TRUE AND ACCURATE RECORD OF THE WORKS.

SIGNED: DATE: 17-04-15
NAME of SIGNATORY: ANDY WALMSLEY
RPEQ No. or LICENCE: A30723
COMPANY NAME: SJ ELECTRIC
START DATE: FINISH DATE:

SJ ELECTRIC QUEENSLAND
19 ELLIOT ST, ALBION QLD 4010
P 07 3256 1522 F 07 3256 1533
Email@sjelectric.com.au ABN 45 124 414 768
www.trivantage.com.au REC 73286
TRIVANTAGE A DIVISION OF THE TRIVANTAGE GROUP

NAME SIGNATURE DATE
QUEENSLAND URBAN UTILITIES DELEGATE
(AUTHORISED FOR 12 MONTHS FROM DATE SHOWN)
QUEENSLAND Urban Utilities

No.	DATE	AMENDMENT	DRAFTED	DESIGNED	RPEQ NO.	APPROVED
1	03/15	AS CONSTRUCTED	E.Y	H.G		
0	01/15	ISSUED FOR CONSTRUCTION	M.C	M.C	14158	
C	01/15	REISSUED FOR APPROVAL	M.C	M.C		H.G

FUNDING
DESIGN W.O. No.
CONSTRUCTION W.O. No.
FUNDED BY Q.U.U. (✓) EXTERNAL ( )

DRAFTED	M.COOGAN		
DRAFTING CHECK	H.GARDNER		
CAD FILE	486_5_5-0275-110		
Q.U.U. FILE No.			

M.COOGAN			18/12/14
DESIGN	R.P.E.Q. No.	DATE	
H.GARDNER	14158	18/12/14	
DESIGN CHECK	R.P.E.Q. No.	DATE	

APPROVED BY	SIGNATURE	DATE
CONSTRUCTION MANAGER	SIGNATURE	DATE

ASSET/PROJECT
LUGGAGE POINT SEWAGE TREATMENT PLANT

DRAWING TITLE
MAIN AUXILIARY SWITCHBOARD GENERAL ARRANGEMENT

SHEET No. 3 OF 9
QUEENSLAND URBAN UTILITIES DRAWING No. 486/5/5-0275-112
AMEND. 1

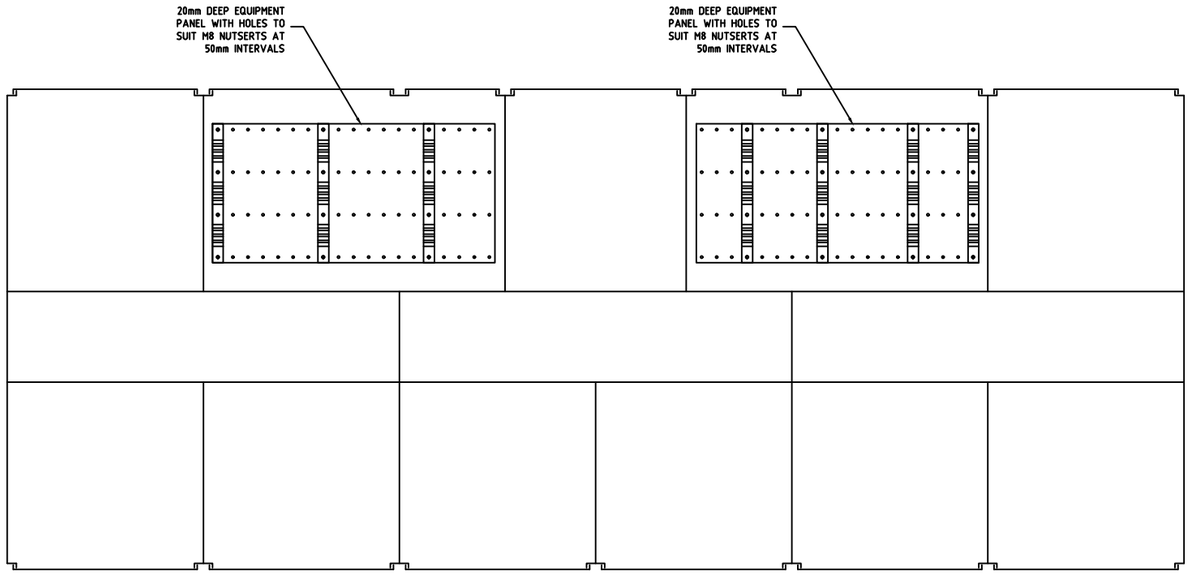

SECTION 1 / 111
N.T.S

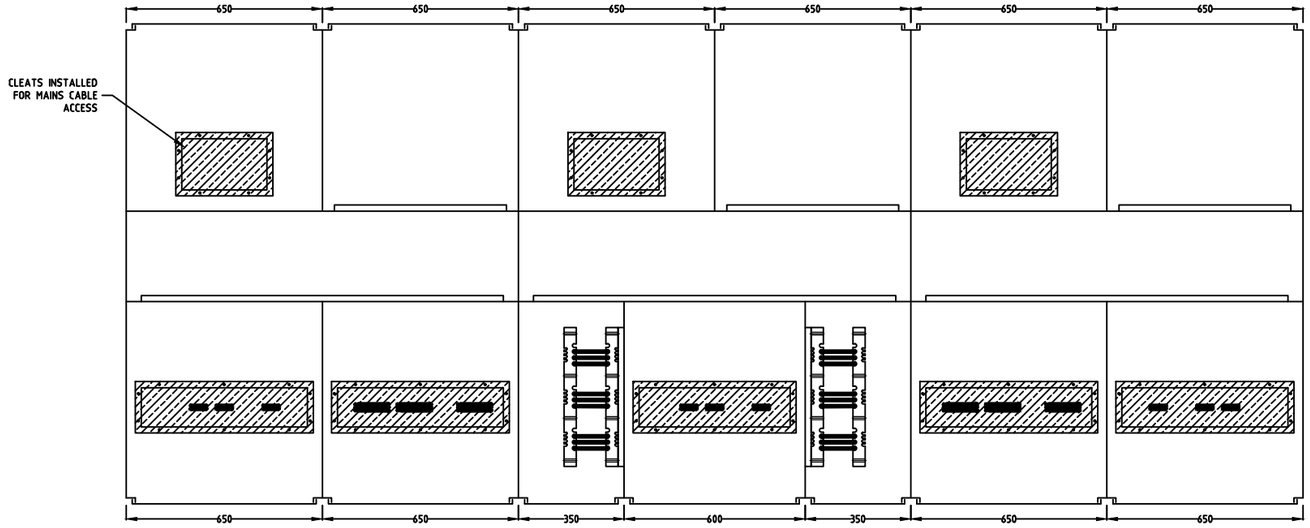

SECTION 2 / 111
N.T.S

AS CONSTRUCTED DETAILS

I CERTIFY THAT THE "AS CONSTRUCTED" DETAILS SHOWN ON THIS PLAN ARE A TRUE AND ACCURATE RECORD OF THE WORKS.

SIGNED: DATE: 17-04-15
NAME of SIGNATORY: ANDY WALMSLEY
RPEQ No. or LICENCE: A30723
COMPANY NAME: SJ ELECTRIC
START DATE: FINISH DATE:

SJ ELECTRIC QUEENSLAND
19 ELLIOT ST, ALBION QLD 4010
P 07 3256 1522 F 07 3256 1533
Email@sjelectric.com.au ABN 45 124 414 768
www.trivantage.com.au REC 73286
TRIVANTAGE A DIVISION OF THE TRIVANTAGE GROUP

NAME SIGNATURE DATE
QUEENSLAND URBAN UTILITIES DELEGATE
(AUTHORISED FOR 12 MONTHS FROM DATE SHOWN)
QUEENSLAND Urban Utilities

No.	DATE	AMENDMENT	DRAFTED	DESIGNED	RPEQ NO.	APPROVED
1	03/15	AS CONSTRUCTED	E.Y	H.G		
0	01/15	ISSUED FOR CONSTRUCTION	M.C	M.C	14158	
C	01/15	REISSUED FOR APPROVAL	M.C	M.C		H.G

FUNDING	
DESIGN W.O. No.	
CONSTRUCTION W.O. No.	
FUNDED BY Q.U.U. (✓)	EXTERNAL ( )

DRAFTED	M.COOGAN		
DRAFTING CHECK	H.GARDNER		
CAD FILE	486_5_5-0275-110		
Q.U.U. FILE No.			
M.COOGAN			18/12/14
DESIGN		R.P.E.Q. No.	DATE
H.GARDNER		14158	18/12/14
DESIGN CHECK		R.P.E.Q. No.	DATE

APPROVED BY	SIGNATURE	DATE
CONSTRUCTION MANAGER	SIGNATURE	DATE

ASSET/PROJECT
LUGGAGE POINT SEWAGE TREATMENT PLANT

DRAWING TITLE
MAIN AUXILIARY SWITCHBOARD GENERAL ARRANGEMENT

SHEET No. 4 OF 9
QUEENSLAND URBAN UTILITIES DRAWING No. 486/5/5-0275-113
AMEND. 1

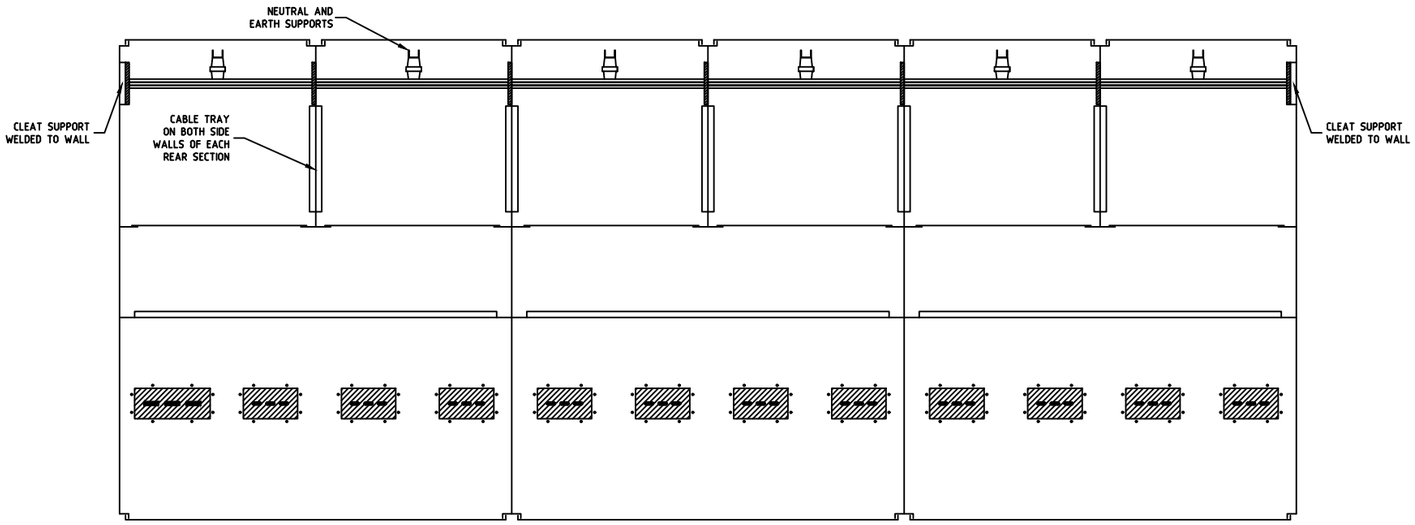

SECTION 3 / 111
N.T.S

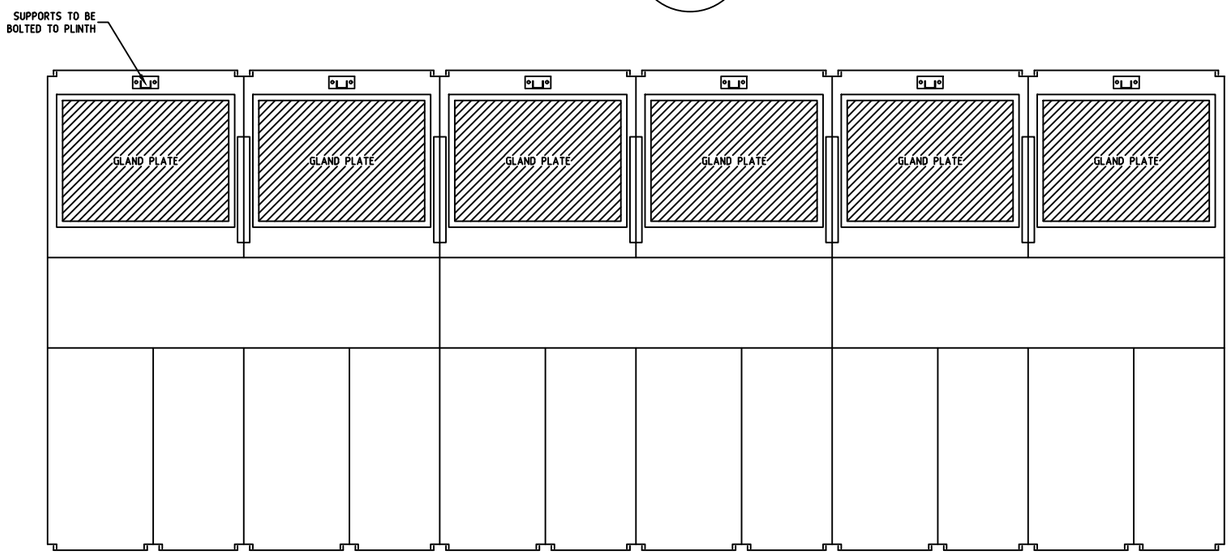

SECTION 4 / 111
N.T.S

AS CONSTRUCTED DETAILS

I CERTIFY THAT THE "AS CONSTRUCTED" DETAILS SHOWN ON THIS PLAN ARE A TRUE AND ACCURATE RECORD OF THE WORKS.

SIGNED: DATE: 17-04-15
NAME of SIGNATORY: ANDY WALMSLEY
RPEQ No. or LICENCE: A30723
COMPANY NAME: SJ ELECTRIC
START DATE: FINISH DATE:

SJ ELECTRIC QUEENSLAND
19 ELLIOT ST, ALBION QLD 4010
P 07 3256 1522 F 07 3256 1533
Email@sjelectric.com.au ABN 45 124 414 768
www.trivantage.com.au REC 73286
TRIVANTAGE A DIVISION OF THE TRIVANTAGE GROUP

NAME SIGNATURE DATE
QUEENSLAND URBAN UTILITIES DELEGATE
(AUTHORISED FOR 12 MONTHS FROM DATE SHOWN)
QUEENSLAND Urban Utilities

No.	DATE	AMENDMENT	DRAFTED	DESIGNED	RPEQ NO.	APPROVED
1	03/15	AS CONSTRUCTED	E.Y	H.G		
0	01/15	ISSUED FOR CONSTRUCTION	M.C	M.C	14158	
C	01/15	REISSUED FOR APPROVAL	M.C	M.C		H.G

FUNDING	
DESIGN W.O. No.	
CONSTRUCTION W.O. No.	
FUNDED BY Q.U.U. (✓)	EXTERNAL ( )

DRAFTED	M.COOGAN		
DRAFTING CHECK	H.GARDNER		
CAD FILE	486_5_5-0275-110		
Q.U.U. FILE No.			
M.COOGAN			18/12/14
DESIGN	R.P.E.Q. No.	DATE	
H.GARDNER	14158	18/12/14	
DESIGN CHECK	R.P.E.Q. No.	DATE	

APPROVED BY	SIGNATURE	DATE
CONSTRUCTION MANAGER	SIGNATURE	DATE

ASSET/PROJECT
LUGGAGE POINT SEWAGE TREATMENT PLANT

DRAWING TITLE
MAIN AUXILIARY SWITCHBOARD GENERAL ARRANGEMENT

SHEET No. 5 OF 9
QUEENSLAND URBAN UTILITIES DRAWING No. 486/5/5-0275-114
AMEND. 1

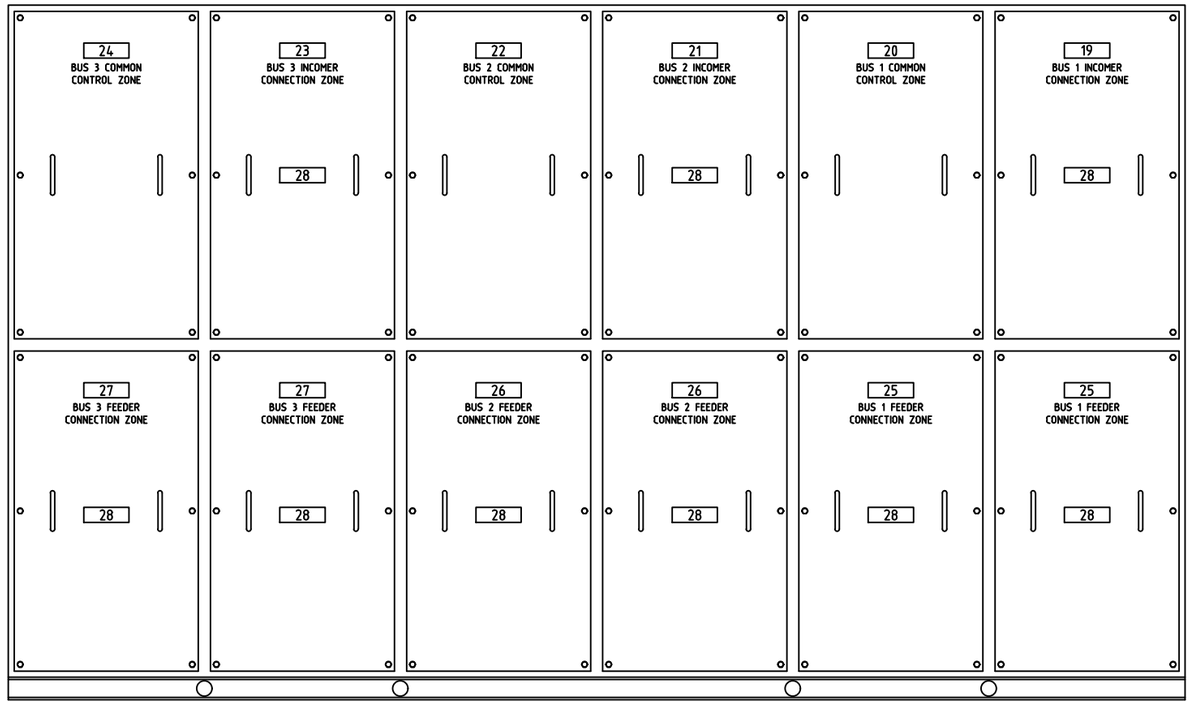

REAR VIEW
N.T.S

AS CONSTRUCTED DETAILS

I CERTIFY THAT THE "AS CONSTRUCTED" DETAILS SHOWN ON THIS PLAN ARE A TRUE AND ACCURATE RECORD OF THE WORKS.

SIGNED: DATE: 17-04-15
NAME of SIGNATORY: ANDY WALMSLEY
RPEQ No. or LICENCE: A30723
COMPANY NAME: SJ ELECTRIC
START DATE: FINISH DATE:

SJ ELECTRIC QUEENSLAND
19 ELLIOT ST, ALBION QLD 4010
P 07 3256 1522 F 07 3256 1533
Email@sjelectric.com.au ABN 45 124 414 768
www.trivantage.com.au REC 73286
TRIVANTAGE A DIVISION OF THE TRIVANTAGE GROUP

NAME SIGNATURE DATE
QUEENSLAND URBAN UTILITIES DELEGATE
(AUTHORISED FOR 12 MONTHS FROM DATE SHOWN)
QUEENSLAND Urban Utilities

No.	DATE	AMENDMENT	DRAFTED	DESIGNED	RPEQ NO.	APPROVED
1	03/15	AS CONSTRUCTED	E.Y	H.G		
0	01/15	ISSUED FOR CONSTRUCTION	M.C	M.C	14158	
C	01/15	REISSUED FOR APPROVAL	M.C	M.C		H.G

FUNDING
DESIGN W.O. No.
CONSTRUCTION W.O. No.
FUNDED BY Q.U.U. (✓) EXTERNAL ( )

DRAFTED	M.COOGAN		
DRAFTING CHECK	H.GARDNER		
CAD FILE	486_5_5-0275-110		
Q.U.U. FILE No.			

M.COOGAN		18/12/14
DESIGN	R.P.E.Q. No.	DATE
H.GARDNER	14158	18/12/14
DESIGN CHECK	R.P.E.Q. No.	DATE

APPROVED BY	SIGNATURE	DATE
CONSTRUCTION MANAGER	SIGNATURE	DATE

ASSET/PROJECT
LUGGAGE POINT SEWAGE TREATMENT PLANT

DRAWING TITLE
MAIN AUXILIARY SWITCHBOARD GENERAL ARRANGEMENT

SHEET No. 6 OF 9
QUEENSLAND URBAN UTILITIES DRAWING No. 486/5/5-0275-115
AMEND. 1

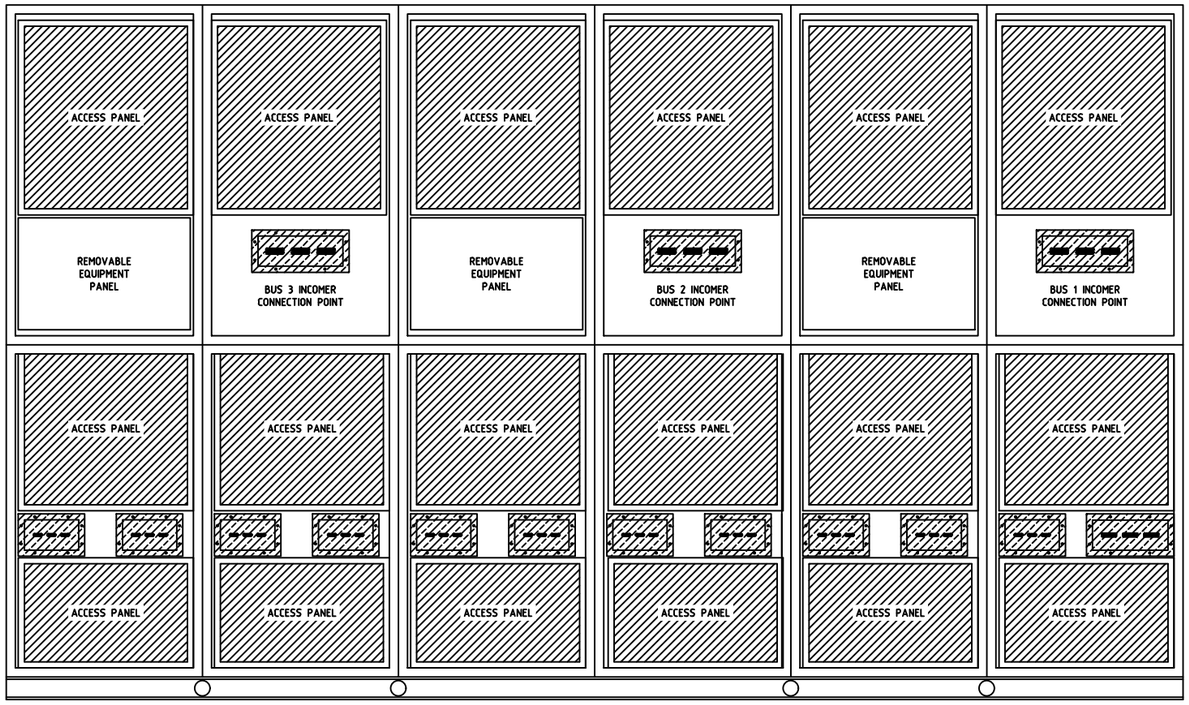

REAR VIEW
N.T.S
DOORS REMOVED

AS CONSTRUCTED DETAILS

I CERTIFY THAT THE "AS CONSTRUCTED" DETAILS SHOWN ON THIS PLAN ARE A TRUE AND ACCURATE RECORD OF THE WORKS.

SIGNED: DATE: 17-04-15
NAME of SIGNATORY: ANDY WALMSLEY
RPEQ No. or LICENCE: A30723
COMPANY NAME: SJ ELECTRIC
START DATE: FINISH DATE:

SJ ELECTRIC QUEENSLAND
19 ELLIOT ST, ALBION QLD 4010
P 07 3256 1522 F 07 3256 1533
Email@sjelectric.com.au ABN 45 124 414 768
www.trivantage.com.au REC 73286
TRIVANTAGE A DIVISION OF THE TRIVANTAGE GROUP

NAME SIGNATURE DATE
QUEENSLAND URBAN UTILITIES DELEGATE
(AUTHORISED FOR 12 MONTHS FROM DATE SHOWN)

QUEENSLAND Urban Utilities

No.	DATE	AMENDMENT	DRAFTED	DESIGNED	RPEQ NO.	APPROVED
1	03/15	AS CONSTRUCTED	E.Y	H.G		
0	01/15	ISSUED FOR CONSTRUCTION	M.C	M.C	14158	
C	01/15	REISSUED FOR APPROVAL	M.C	M.C		H.G

FUNDING
DESIGN W.O. No.
CONSTRUCTION W.O. No.
FUNDED BY Q.U.U. (✓) EXTERNAL ( )

DRAFTED M.COOGAN
DRAFTING CHECK H.GARDNER
CAD FILE 486_5_5-0275-110
Q.U.U. FILE No.

M.COOGAN 18/12/14
DESIGN R.P.E.Q. No. DATE
H.GARDNER 14158 18/12/14
DESIGN CHECK R.P.E.Q. No. DATE

APPROVED BY SIGNATURE DATE
CONSTRUCTION MANAGER SIGNATURE DATE

ASSET/PROJECT
LUGGAGE POINT SEWAGE TREATMENT PLANT

DRAWING TITLE
MAIN AUXILIARY SWITCHBOARD GENERAL ARRANGEMENT

SHEET No. 7 OF 9
QUEENSLAND URBAN UTILITIES DRAWING No. 486/5/5-0275-116
AMEND. 1

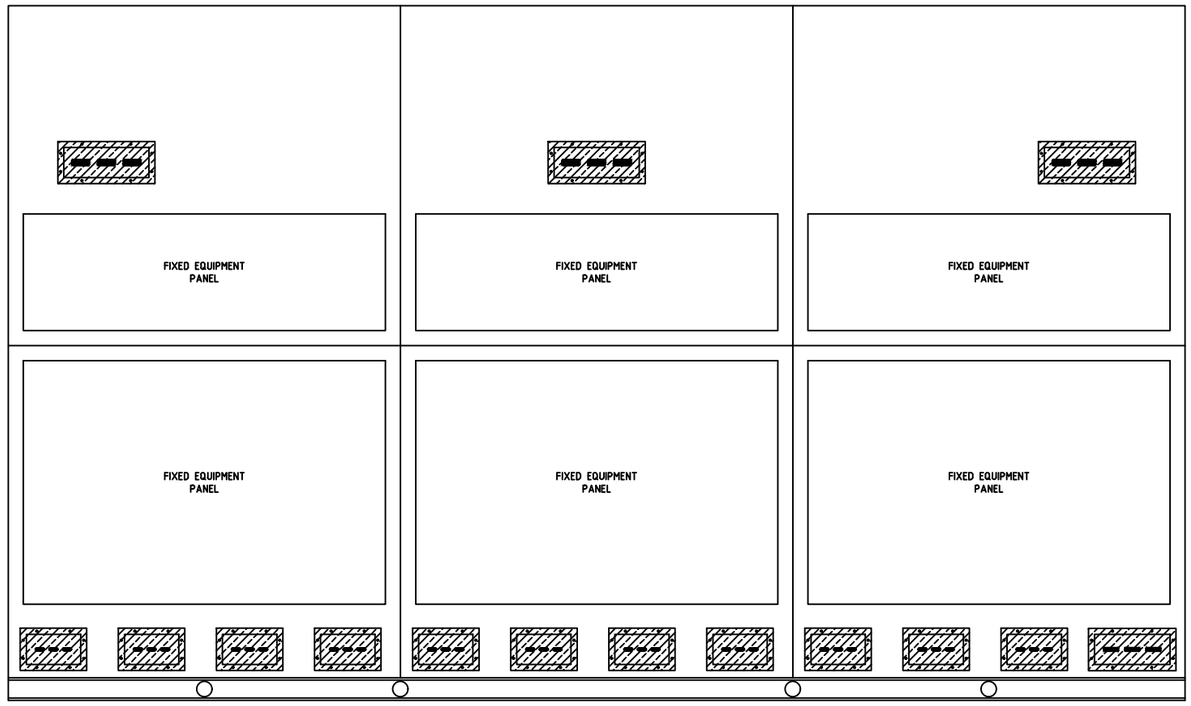

SECTION AA
N.T.S
113

AS CONSTRUCTED DETAILS

I CERTIFY THAT THE "AS CONSTRUCTED" DETAILS SHOWN ON THIS PLAN ARE A TRUE AND ACCURATE RECORD OF THE WORKS.

SIGNED: DATE: 17-04-15
NAME of SIGNATORY: ANDY WALMSLEY
RPEQ No. or LICENCE: A30723
COMPANY NAME: SJ ELECTRIC
START DATE: FINISH DATE:

SJ ELECTRIC QUEENSLAND
19 ELLIOT ST, ALBION QLD 4010
P 07 3256 1522 F 07 3256 1533
Email@sjelectric.com.au ABN 45 124 414 768
www.trivantage.com.au REC 73286
TRIVANTAGE A DIVISION OF THE TRIVANTAGE GROUP

NAME SIGNATURE DATE
QUEENSLAND URBAN UTILITIES DELEGATE
(AUTHORISED FOR 12 MONTHS FROM DATE SHOWN)
QUEENSLAND Urban Utilities

No.	DATE	AMENDMENT	DRAFTED	DESIGNED	RPEQ NO.	APPROVED
1	03/15	AS CONSTRUCTED	E.Y	H.G		
0	01/15	ISSUED FOR CONSTRUCTION	M.C	M.C	14158	
C	01/15	REISSUED FOR APPROVAL	M.C	M.C		H.G

FUNDING	
DESIGN W.O. No.	
CONSTRUCTION W.O. No.	
FUNDED BY Q.U.U. (✓)	EXTERNAL ( )

DRAFTED	M.COOGAN	
DRAFTING CHECK	H.GARDNER	
CAD FILE	486_5_5-0275-110	
Q.U.U. FILE No.		

M.COOGAN		18/12/14
DESIGN	R.P.E.Q. No.	DATE
H.GARDNER	14158	18/12/14
DESIGN CHECK	R.P.E.Q. No.	DATE

APPROVED BY	SIGNATURE	DATE
CONSTRUCTION MANAGER	SIGNATURE	DATE

ASSET/PROJECT
LUGGAGE POINT SEWAGE TREATMENT PLANT

DRAWING TITLE
MAIN AUXILIARY SWITCHBOARD GENERAL ARRANGEMENT

SHEET No. 8 OF 9
QUEENSLAND URBAN UTILITIES DRAWING No. 486/5/5-0275-117
AMEND. 1

CONSTRUCTION DETAILS

CONSTRUCTION:	MACHINE FORMED AND WELDED.
	FRONT CONNECTED, FLOOR MOUNTED.
	ALL JOINTS TO BE CONTINUOUSLY WELDED.
MATERIAL:	2mm ZINCANNEAL SHEET STEEL CUBICLES AND DOORS.
	2mm ZINCANNEAL SHEET STEEL GEAR TRAYS.
FASTENERS:	MILD STEEL NUTS & BOLTS.
LIFTING FACILITY:	LIFTING TUBES IN PLINTH AS SHOWN.
CABLE ENTRIES:	REAR BOTTOM ONLY AS SHOWN.
GLANDPLATES:	TYPE X GLAND PLATES AS SHOWN.
PLINTH:	75x 40x 5mm M.S CHANNEL WITH 13mm DIA HOLES IN LOWER FRONT & REAR FLANGES
	HOT DIP GALVANISED AFTER FABRICATION.
HINGED DOORS:	FITTED WITH CHROME PLATED BRASS PINTLE HINGES.
	FITTED WITH CHROME PLATED CAPTIVE SPANNER LOCK.
LIFT OFF DOORS:	FITTED WITH CHROME PLATED 'D' HANDLES.
	FITTED WITH CHROME PLATED ACORN NUTS.
ACCESS PANELS:	SECURED WITH M6 HEX HEAD SCREWS.
STIFFENING:	ALL DOORS OVER 1000mm HIGH AND 450mm WIDE.
WEATHER SEALS:	NEOPRENE RUBBER AROUND EACH DOOR.
FINISH:	ELECTROSTATIC POWDER COATED.
PREPARATION:	CLEAN, DEGREASE AND GRIND SMOOTH
EXTERNAL COLOUR:	POWDER COATED, ORANGE X15 TO AS2700
EQUIPMENT PANELS:	POWDER COATED, WHITE N14 TO AS2700
LABELS:	MATERIAL- ENGRAVED TRAFFOLYTE
	FIXING- M3 x 6 TAPTIGHTS
	COLOUR- W/B/W UNLESS NOTED IN SCHEDULE
	NOTE: FOR LABEL SCHEDULE REFER TO DRAWINGS 486/5/5-0275-119 TO 120

ELECTRICAL DETAILS

BUSBARS:	ROUNDED-EDGE HDHC COPPER TO AS 3439, @ 40/30	
	MARKED AT MAXIMUM 300mm INTERVAL IN PHASE, NEUTRAL AND EARTH BARS	
BUSBAR JOINTS:	ALL BUSBAR JOINTS TO USE HIGH TENSILE BOLTS	
	AND NYLOCK LOCK NUTS.	
BUSBAR SUPPORTS:	12mm PERMALI DENSIFIED WOOD	
	SHEET MOULDING COMPOUND - SMC (MAXIMUM 350mm APART)	
	FIXED TO BUS CLEAT MOUNTING TRAY WITH 8mm STEEL THREADED	
	ROD, INSULATED IN BLACK HEAT SHRINK, SCREWED INTO 8mm	
	THINWALL NUTSERTS.	
SMC SUPPORT MANUFACTURER:	YUEQING CEJIE ELECTRICAL APPLIANCE FACTORY	
FAULT LEVEL:	65kA	
RATED VOLTAGE:	690V	
SEGREGATION	FORM 3b TO AS 3439.1	
PROTECTION	IP54 TO AS 1939	
WIRING	POWER-	PVC INSULATED V90 MINIMUM 2.5mm sq.
		PHASE COLOURED
	CONTROL-	PVC INSULATED V90 FLEX
		240V CONTROLS — RED (1.0mm sq.)
		240V NEUTRALS — BLACK (1.0mm sq.)
		24VDC+ (TO DISTRIBUTION) — ORANGE (1.0mm sq.)
		24VDC- (TO DISTRIBUTION) — VIOLET (1.0mm sq.)
		DIGITAL I/O 24VDC (+ & -) AFTER DISTRIBUTION FUSES — GREY (0.5mm sq.)
		EARTH — GREEN/YELLOW (2.5mm MINIMUM)
MARKERS-	GRAFOPLAST EQUIVALENT BLACK TEXT ON WHITE	

AS CONSTRUCTED DETAILS

I CERTIFY THAT THE "AS CONSTRUCTED" DETAILS SHOWN ON THIS PLAN ARE A TRUE AND ACCURATE RECORD OF THE WORKS.

SIGNED: DATE: 17-04-15

NAME of SIGNATORY: ANDY WALMSLEY

RPEQ No. or LICENCE: A30723

COMPANY NAME: SJ ELECTRIC

START DATE: FINISH DATE:

SJ ELECTRIC QUEENSLAND
19 ELLIOT ST, ALBION QLD 4010
P 07 3256 1522 F 07 3256 1533
Email@sjelectric.com.au ABN 45 124 414 768
www.trivantage.com.au REC 73286
TRIVANTAGE A DIVISION OF THE TRIVANTAGE GROUP

NAME SIGNATURE DATE

QUEENSLAND URBAN UTILITIES DELEGATE
(AUTHORISED FOR 12 MONTHS FROM DATE SHOWN)

QUEENSLAND Urban Utilities

No.	DATE	AMENDMENT	DRAFTED	DESIGNED	RPEQ NO.	APPROVED
1	03/15	AS CONSTRUCTED	E.Y	H.G		
0	01/15	ISSUED FOR CONSTRUCTION	M.C	M.C	14158	
C	01/15	REISSUED FOR APPROVAL	M.C	M.C		H.G

FUNDING		DRAFTED	M.COOGAN
DESIGN W.O. No.		DRAFTING CHECK	H.GARDNER
CONSTRUCTION W.O. No.		CAD FILE	486_5_5-0275-110
FUNDED BY Q.U.U. (✓)	EXTERNAL ( )	Q.U.U. FILE No.	

M.COOGAN			18/12/14
DESIGN	R.P.E.Q. No.	DATE	
H.GARDNER	14158	18/12/14	
DESIGN CHECK	R.P.E.Q. No.	DATE	

APPROVED BY SIGNATURE DATE

CONSTRUCTION MANAGER SIGNATURE DATE

ASSET/PROJECT: LUGGAGE POINT SEWAGE TREATMENT PLANT

DRAWING TITLE: MAIN AUXILIARY SWITCHBOARD GENERAL ARRANGEMENT

SHEET No. 9 OF 9

QUEENSLAND URBAN UTILITIES DRAWING No. 486/5/5-0275-118

AMEND. 1

MAIN AUXILIARY SWITCHBOARD LABEL SCHEDULE (SHEET 1)

LABEL No.	LABEL SIZE (mm) LENGTH	HEIGHT	WIDTH	MATERIAL	COLOUR	No. OF LINES	TEXT STYLE	TEXT SIZE (mm)	FIXING HOLES	LABEL DESCRIPTION	COMMENTS
N/A	STANDARD	STANDARD	STANDARD	TRAFFOLYTE	S/B/S	11	STANDARD	STANDARD	4x3mm	MANUFACTURER: SJ ELECTRIC AUST P/L	STANDARD SJ ELECTRIC COMPLIANCE LABEL TO BE USED
										INDENTIFICATION No: LUGGAGE POINT 415 AUX MSB	
										AS3439 TYPE: FORM 3b	
										RATED CURRENT: 2000A	
										RATED VOLTAGE: 600V 50Hz	
										FAULT RATING: 65kA	
										IP RATING: IP54	
										TYPE TEST CERT. No.: 102598, 102643	
										EARTHING: M.E.N	
										DIMENSION: 2300H x 3900W x 1550D	
										SERIAL No: 43402595-MSB	
										DATE OF MANUFACTURE: 02/2015	
										REMOVAL OF THIS LABEL CONTRAVENES AS/NZS3000:2007	
1	150	40	STANDARD	TRAFFOLYTE	Y/B/Y	3	BOLD	10mm	4x3mm	BUS 1 MAIN SWITCH 1250/1200A	
								10mm			
								5mm			
2	150	40	STANDARD	TRAFFOLYTE	W/B/W	3	BOLD	10mm	4x3mm	BUS 1 & 2 BUS TIE 2000A	
								10mm			
								5mm			
3	150	40	STANDARD	TRAFFOLYTE	Y/B/Y	3	BOLD	10mm	4x3mm	BUS 2 MAIN SWITCH 1250/1200A	
								10mm			
								5mm			
4	150	40	STANDARD	TRAFFOLYTE	W/B/W	3	BOLD	10mm	4x3mm	BUS 3 & 4 BUS TIE 2000A	
								10mm			
								5mm			
5	150	40	STANDARD	TRAFFOLYTE	Y/B/Y	3	BOLD	10mm	4x3mm	BUS 3 MAIN SWITCH 1250/1200A	
								10mm			
								5mm			
6	150	40	STANDARD	TRAFFOLYTE	W/B/W	3	BOLD	10mm	4x3mm	Q10 DIGESTION AREA MCC FEEDER 800/800A	
								10mm			
								5mm			
7	150	40	STANDARD	TRAFFOLYTE	W/B/W	2	BOLD	10mm	4x3mm	N1 Q11 SPARE 400/400A	
								5mm			
8	150	40	STANDARD	TRAFFOLYTE	W/B/W	3	BOLD	10mm	4x3mm	N2 Q12 ESSENTIAL SERVICES No.1 FEEDER 400/400A	
								10mm			
								5mm			
9	150	40	STANDARD	TRAFFOLYTE	W/B/W	2	BOLD	10mm	4x3mm	N3 Q13 SPARE 250/200A	
								5mm			
10	150	40	STANDARD	TRAFFOLYTE	W/B/W	3	BOLD	10mm	4x3mm	N4 Q14 SITE MAIN SWITCHBOARD FEEDER 400/400A	
								10mm			
								5mm			
11	150	40	STANDARD	TRAFFOLYTE	W/B/W	3	BOLD	10mm	4x3mm	N5 Q15 BLOWER AUXILIARY SUPPLIES SWITCHBOARD FEEDER 250/250A	
								10mm			
								5mm			
12	150	40	STANDARD	TRAFFOLYTE	W/B/W	3	BOLD	10mm	4x3mm	N6 Q16 ESSENTIAL SERVICES No.2 FEEDER 400/400A	
								10mm			
								5mm			
13	150	40	STANDARD	TRAFFOLYTE	W/B/W	3	BOLD	10mm	4x3mm	N7 Q17 SPARE 400/400A	
								10mm			
								5mm			
14	150	40	STANDARD	TRAFFOLYTE	W/B/W	2	BOLD	10mm	4x3mm	N8 Q18 COGEN MCC FEEDER 400/400A	
								5mm			
15	150	40	STANDARD	TRAFFOLYTE	W/B/W	2	BOLD	10mm	4x3mm	N9 Q19 MCP1+A1 FEEDER 250/100A	
								10mm			
								5mm			
16	150	40	STANDARD	TRAFFOLYTE	W/B/W	3	BOLD	10mm	4x3mm	N10 Q20 SPARE 400/400A	
								10mm			
								5mm			
17	150	40	STANDARD	TRAFFOLYTE	W/B/W	2	BOLD	10mm	4x3mm	N11 Q21 MCP2+A1 FEEDER 250/100A	
								5mm			

AS CONSTRUCTED DETAILS

I CERTIFY THAT THE "AS CONSTRUCTED" DETAILS SHOWN ON THIS PLAN ARE A TRUE AND ACCURATE RECORD OF THE WORKS.

SIGNED: DATE: 17-04-15

NAME of SIGNATORY: ANDY WALMSLEY

RPEQ No. or LICENCE: A30723

COMPANY NAME: SJ ELECTRIC

START DATE: FINISH DATE:

SJ ELECTRIC QUEENSLAND
19 ELLIOT ST, ALBION QLD 4010
P 07 3256 1522 F 07 3256 1533
Email@sjelectric.com.au ABN 45 124 414 768
www.trivantage.com.au REC 73286
TRIVANTAGE A DIVISION OF THE TRIVANTAGE GROUP

NAME SIGNATURE DATE

QUEENSLAND URBAN UTILITIES DELEGATE
(AUTHORISED FOR 12 MONTHS FROM DATE SHOWN)

QUEENSLAND UrbanUtilities

No.	DATE	AMENDMENT	DRAFTED	DESIGNED	RPEQ NO.	APPROVED
1	03/15	AS CONSTRUCTED	E.Y	H.G		
0	01/15	ISSUED FOR CONSTRUCTION	H.G	H.G	14158	

FUNDING: DESIGN W.O. No. / CONSTRUCTION W.O. No. / FUNDED BY Q.U.U. (✓) EXTERNAL ( )

DRAFTED M.COOGAN
DRAFTING CHECK H.GARDNER
CAD FILE 486_5_5-0275-119
Q.U.U. FILE No.

M.COOGAN DESIGN R.P.E.Q. No. 08/01/14 DATE
H.GARDNER DESIGN CHECK R.P.E.Q. No. 14158 08/01/14 DATE

APPROVED BY SIGNATURE DATE
CONSTRUCTION MANAGER SIGNATURE DATE

ASSET/PROJECT: LUGGAGE POINT SEWAGE TREATMENT PLANT

DRAWING TITLE: MAIN AUXILIARY SWITCHBOARD LABEL SCHEDULE

SHEET No. 1 OF 2

QUEENSLAND URBAN UTILITIES DRAWING No. 486/5/5-0275-119

AMEND. 1

MAIN AUXILIARY SWITCHBOARD LABEL SCHEDULE (SHEET 2)

LABEL No.	LABEL SIZE (mm) LENGTH	HEIGHT	WIDTH	MATERIAL	COLOUR	No. OF LINES	TEXT STYLE	TEXT SIZE (mm)	FIXING HOLES	LABEL DESCRIPTION	COMMENTS
18	150	40	STANDARD	TRAFFOLYTE	W/B/W	1	BOLD	10mm	4x3mm	**BUS ZONE**	- 6 x LABELS REQUIRED (1 FOR EACH BUS ZONE)
19	150	40	STANDARD	TRAFFOLYTE	W/B/W	2	BOLD	10mm	4x3mm	**BUS 1 INCOMER CONNECTION ZONE**	
20	150	40	STANDARD	TRAFFOLYTE	W/B/W	2	BOLD	10mm	4x3mm	**BUS 1 COMMON CONTROL ZONE**	
21	150	40	STANDARD	TRAFFOLYTE	W/B/W	2	BOLD	10mm	4x3mm	**BUS 2 INCOMER CONNECTION ZONE**	
22	150	40	STANDARD	TRAFFOLYTE	W/B/W	2	BOLD	10mm	4x3mm	**BUS 2 COMMON CONTROL ZONE**	
23	150	40	STANDARD	TRAFFOLYTE	W/B/W	2	BOLD	10mm	4x3mm	**BUS 3 INCOMER CONNECTION ZONE**	
24	150	40	STANDARD	TRAFFOLYTE	W/B/W	2	BOLD	10mm	4x3mm	**BUS 3 COMMON CONTROL ZONE**	
25	150	40	STANDARD	TRAFFOLYTE	W/B/W	2	BOLD	10mm	4x3mm	**BUS 1 FEEDER CONNECTION ZONE**	- 2 x LABELS REQUIRED
26	150	40	STANDARD	TRAFFOLYTE	W/B/W	2	BOLD	10mm	4x3mm	**BUS 2 FEEDER CONNECTION ZONE**	- 2 x LABELS REQUIRED
27	150	40	STANDARD	TRAFFOLYTE	W/B/W	2	BOLD	10mm	4x3mm	**BUS 3 FEEDER CONNECTION ZONE**	- 2 x LABELS REQUIRED
28	150	40	STANDARD	TRAFFOLYTE	W/B/W	3	BOLD	8mm 4mm 4mm	4x3mm	**WARNING** **LIVE BUSBARS LOCATED BEHIND PANEL** **ISOLATE SUPPLY BEFORE REMOVING**	- 9 x LABELS REQUIRED - TO BE SECURED TO ALL ACCESS PANELS

AS CONSTRUCTED DETAILS

I CERTIFY THAT THE "AS CONSTRUCTED" DETAILS SHOWN ON THIS PLAN ARE A TRUE AND ACCURATE RECORD OF THE WORKS.

SIGNED: DATE: 17-04-15

NAME of SIGNATORY: ANDY WALMSLEY

RPEQ No. or LICENCE: A30723

COMPANY NAME: SJ ELECTRIC

START DATE: FINISH DATE:

SJ ELECTRIC QUEENSLAND

19 ELLIOT ST, ALBION QLD 4010
P 07 3256 1522 F 07 3256 1533
Email@sjelectric.com.au ABN 45 124 414 768
www.trivantage.com.au REC 73286
TRIVANTAGE A DIVISION OF THE TRIVANTAGE GROUP

NAME SIGNATURE DATE

QUEENSLAND URBAN UTILITIES DELEGATE
(AUTHORISED FOR 12 MONTHS FROM DATE SHOWN)

QUEENSLAND UrbanUtilities

No.	DATE	AMENDMENT	DRAFTED	DESIGNED	RPEQ NO.	APPROVED
1	03/15	AS CONSTRUCTED	E.Y	H.G		
0	01/15	ISSUED FOR CONSTRUCTION	H.G	H.G	14158	

FUNDING
DESIGN W.O. No.
CONSTRUCTION W.O. No.
FUNDED BY Q.U.U. (✓) EXTERNAL ( )

DRAFTED M.COOGAN
DRAFTING CHECK H.GARDNER
CAD FILE 486_5_5-0275-119
Q.U.U. FILE No.

M.COOGAN 08/01/14
DESIGN R.P.E.Q. No. DATE
H.GARDNER 14158 08/01/14
DESIGN CHECK R.P.E.Q. No. DATE

APPROVED BY SIGNATURE DATE
CONSTRUCTION MANAGER SIGNATURE DATE

ASSET/PROJECT
LUGGAGE POINT SEWAGE TREATMENT PLANT

DRAWING TITLE
MAIN AUXILIARY SWITCHBOARD LABEL SCHEDULE

SHEET No. 2 OF 2
QUEENSLAND URBAN UTILITIES DRAWING No. 486/5/5-0275-120
AMEND. 1

MAIN AUXILIARY SWITCHBOARD EQUIPMENT SCHEDULE

ITEM	QTY	MAKE & MODEL	SUPPLIER	PART No.	NOTES
Q1, Q3, Q5	3	ACB, 65kA, ELECTRONIC OCR, 1250A	NHP	AGR21S	
		- 4 C/O CONTACTS			
		- AGR21			
		- IP55 DOOR COVER			
		- HH TAGS			
		- FORTRESS KEY INTERLOCK			
Q2, Q4	2	LOAD BREAK SWITCH, 2000A	NHP	SLB20003P	
	9	CURRENT TRANSFORMER 1200/5A	DORE	CT8/1200	
	3	3 CT TEST LINK (3 PHASES) + Disconnect	IPD	CDS6U-3PCT	
	13	FUSE 6A	NHP	NNS6	
	13	FUSE HOLDER, BLACK, 32A	NHP	NV32FW	
	7	SOLID LINK	NHP	32CLK	
	7	FUSE HOLDER, WHITE, 32A	NHP	NV32FWW	
Q19, Q21	7	MCCB, 70kA, ELECTRONIC, 125/250	NHP	S250PE3125	
Q13, Q15	7	MCCB, 70kA, ELECTRONIC, 250/250	NHP	S250PE3250	
Q11, Q12, Q14, Q16, Q17, Q18, Q20	7	MCCB, 70kA, ELECTRONIC, 400/400	NHP	S400GE3400	
Q10	1	MCCB, 70kA, ELECTRONIC, 800/800	NHP	S800RE3800	
	4	EXTENDED HANDLE TO SUIT S160/S250	NHP	T2HP25R6BN	
	7	EXTENDED HANDLE TO SUIT S400/S630	NHP	T2HP40R6BN	
	1	EXTENDED HANDLE TO SUIT S800/S1000	NHP	T2HP80R6BN	
	1	SHUNT TRIP TO SUIT MCCB, 240VAC	NHP	T2SH00A20TA	
	3	G5x20 FUSE CARTRIDGE, 0.5A	NHP	V4-0.5F	
	3	V7 FUSE TERMINAL	NHP	V7-WFB4	
	4	V7 THROUGH TERMINAL END PLATE	NHP	V7-EB3	
	8	V7 THROUGH TERMINAL	NHP	V7-W3	
	4	V7 END CLAMP	NHP	V7-EA35	
	3	240VAC/24VDC POWER SUPPLY, 30W	PHOENIX CONTACT	2902991	
	3	MODBUS/ETHERNET GATEWAY	SCHNEIDER	EGX100MG	
	3	POWER METER	SCHNEIDER	METSEPM5350	
	3	KEY INTERLOCK TO SUIT ACB	FORTRESS	CLIN-LHC090	
	2	KEY INTERLOCK TO SUIT ISOLATOR	FORTRESS	BM1-CLIN-A	
	3	KEYS FOR INTERLOCKS	FORTRESS	CLK-LP-SB	

AS CONSTRUCTED DETAILS

I CERTIFY THAT THE "AS CONSTRUCTED" DETAILS SHOWN ON THIS PLAN ARE A TRUE AND ACCURATE RECORD OF THE WORKS.

SIGNED: DATE: 17-04-15

NAME of SIGNATORY: ANDY WALMSLEY

RPEQ No. or LICENCE: A30723

COMPANY NAME: SJ ELECTRIC

START DATE: FINISH DATE:

SJ ELECTRIC QUEENSLAND
19 ELLIOT ST, ALBION QLD 4010
P 07 3256 1522 F 07 3256 1533
Email@sjelectric.com.au ABN 45 124 414 768
www.trivantage.com.au REC 73286
TRIVANTAGE A DIVISION OF THE TRIVANTAGE GROUP

NAME SIGNATURE DATE

QUEENSLAND URBAN UTILITIES DELEGATE
(AUTHORISED FOR 12 MONTHS FROM DATE SHOWN)

QUEENSLAND UrbanUtilities

No.	DATE	AMENDMENT	DRAFTED	DESIGNED	RPEQ NO.	APPROVED
1	03/15	AS CONSTRUCTED	E.Y	H.G		
0	01/15	ISSUED FOR CONSTRUCTION	H.G	H.G	14158	
A	01/15	ISSUED FOR APPROVAL	M.C	M.C		H.G

FUNDING
DESIGN W.O. No.
CONSTRUCTION W.O. No.
FUNDED BY Q.U.U. (✓) EXTERNAL ( )

DRAFTED M.COOGAN
DRAFTING CHECK H.GARDNER
CAD FILE 486_5_5-0275-119
Q.U.U. FILE No.

M.COOGAN 08/01/14
DESIGN R.P.E.Q. No. DATE
H.GARDNER 14158 08/01/14
DESIGN CHECK R.P.E.Q. No. DATE

APPROVED BY SIGNATURE DATE
CONSTRUCTION MANAGER SIGNATURE DATE

ASSET/PROJECT
LUGGAGE POINT SEWAGE TREATMENT PLANT

DRAWING TITLE
MAIN AUXILIARY SWITCHBOARD EQUIPMENT SCHEDULE

SHEET No. 1 OF 1
QUEENSLAND URBAN UTILITIES DRAWING No. 486/5/5-0275-121
AMEND. 1

4. INSPECTION & TEST RESULTS

SJ ELECTRIC QUEENSLAND

SJ Electric Group (Qld) Pty Ltd
A Division of the Trivantage Group

19 Elliot Street, Albion QLD 4010
P 07 3256 1522 F 07 3256 1533
E mail.qld@sjelectric.com.au ABN 45 124 414 768 REC 73286
www.trivantage.com.au

415 VOLT MAIN AUXILARY SWITCHBOARD

COMMISSIONING PLAN REV 01

In Attendance

Name	Role During Commissioning	Company
Gary Say 0418 199 910	QUU electrician	QUU
Damian White	Project Manager	SJ Electric
Faheem Saleh	QUU Commissioning Manager	QUU
Dave Otto	QUU Operations	QUU

Electrical Contactor's Supervisor

Name: A Wausing Date: 13-4-15

Signature: .....

QUU Commissioning Manager

Name: FAHEEM Date: 15/4/15

Signature: .....

1 INTRODUCTION

!! IMPORTANT !!

This commissioning Procedure is not to replace the electrical contractors own internal quality control and statutory documentation.

The SJ Electric team will need to liase with Gary Say and Dave Otto from QUU and inform them what switchboards they need to shut down. Both Gary and Dave are aware what the impacts are and can then inform the correct personnel and take the appropriate actions.

During the upgrade to the new 415 Volt Main Auxiliary Switchboard it is **critical** that power is maintained to the following Distribution boards:

- Digestor Switchboard
- CoGen MCC along with MCP1 and MCP2 feeders
- Site Main Switchboard (Engine and Blower House)
- Essential Services Switchboard including Station Auxiliary Switchboard
- Blowers Auxiliary Switchboard

Therefore generators shall be supplied to temporarily power these switchboards during the changeover.

To calculate the size of the generators required SJ Electric placed a clamp meter on the cables feeding the distribution boards on Friday 20 March 2015 the results are below

This is a brief description of switchboard locations and Generators to be used. All generators are to come with fuel cells.

Digestor Switchboard

Location – Digestor Switchroom

Current readings taken 8.00 am 20/03/2015

Red Phase 500 amps

Blue Phase 502 amps

White Phase 512 amps

Generator No 1 Size – 1000Kva

Electrical Contractor initial:..... QUU Commissioning Manager initial:.....

CoGen MCC along with MCP1 and MCP2 feeders

Location – Cogeneration Plant

CoGen MCC

Red Phase 80 amps

Blue Phase 82 amps

White Phase 82 amps

CoGen Feeder 1

Red Phase 22 amps

Blue Phase 7 amps

White Phase 14 amps

CoGen Feeder 2

Red Phase 5 amps

Blue Phase 7 amps

White Phase 7 amps

Generator No 2 Size – 500Kva

Site Main Switchboard (labelled as Engine and Blower House)

Location – Outside the HV switchroom (Room where 415 Volt Main Auxiliary Switchboard is located)

Current readings taken 8.00 am 20/03/2015

Red Phase 45 amps

Blue Phase 45 amps

White Phase 46 amps

Generator No 3 Size – 300Kva

Essential Services Switchboard including Station Auxiliary Switchboard

Location – Main Engine Room

Current readings taken 8.00 am 20/03/2015

Electrical Contractor initial:..... QUU Commissioning Manager initial:.....

Red Phase 50 amps

Blue Phase 51 amps

White Phase 52 amps

Generator No 3 Size – 300Kva

Blowers Auxiliary Switchboard

Location – Blower Room

Current drawn 8.00 am 20/03/2015

Red Phase 43 amps

Blue Phase 38 amps

White Phase 36 amps

Generator No 3 Size – 300Kva

Electrical Contractor initial:.....

QUU Commissioning Manager initial:.....

1.1 SEQUENCE OF WORKS

DAY 1

1-Mobilise -Arrive on site at Luggage Point STP and sign in

2-Confirm all team members are inducted to the site

3-Induct team members as required

4-Conduct risk assessments and sign off on SWMS

5-Fill out permits etc

6-Brief team on the plan

7-Generators and fuel cells begin to arrive

8-Unload generators and fuel cells in the hard stand area outside of the HV switch room

9-Run out cabling from generators to HV switch room and load centre

10- Place bollards and safety signs

11- Before connecting cables test generators

12- Confirm that all equipment for joining onto existing feeder cables is on site

13- Test for phase rotation and note results

14- Confirm with QUU staff that ready for shut down next day

Day 2

1- Arrive on site at Luggage Point STP and sign in

2- Shut down transformer feeding Blower No 1,2 and 3 Auxiliaries

3- Connect Blower No 1,2 and 3 Auxiliaries cables to load centre cables

4-Start Generator and turn on breaker that feeds Blower No 1,2 and 3 Auxiliaries

5-Confirm Blowers are operational before moving on to Co Gen, Engine and Blower house, Essential Services and Digestion area.

6-Remove old board

7-Install new Board

Day 3

1-Arrive on site at Luggage Point STP and sign in

2-Connect incoming cables from the three transformers

3- Remove cables feeding Blower No 1,2 and 3 Auxiliaries from generator and connect to new board

4-Energise transformer feeding Blower No 1,2 and 3 Auxiliaries

5-Continued to do this for Co Gen, Engine and Blower house, Essential Services and Digestion area

Electrical Contractor initial:..... QUU Commissioning Manager initial:.....

Day 4

1-Arrive on site at Luggage Point STP and sign in

2-Commission board with Faheem Saleh from QUU.

3-Begin packing up cables from generators etc

4-Generators to be picked up by Total Generators

5-Once switchboard commissioned start demobilising from site

Day 5

1- Continue to Demobilise from site

1.2 COMMISSIONING CHECKLIST

The following checklist is to be completed and signed by the electrical contractor.

1.2.1 SWITCHBOARD FACTORY ACCEPTANCE TEST

Contractor Task	Completed
FAT has been completed as per QUU FAT Document and all defects that were identified have been rectified.	OK ☐

1.3 DAY 1 - MOBILISE ON SITE - SET UP GENSETS

Contractor Task	Completed
Arrive on site sign in at control room; induct any team member that requires it.	OK ☑
Conduct Risk Assessments and fill out SWMS.	OK ☑
Fill out a QUU permit – a confined space permit will be required	OK ☑
Carry out toolbox talk and explain the plan to the team	OK ☑
Total Generators will now start to deliver the Gen Sets, fuel cells, load centre and cables. The 1000 KVA Genset will have to be delivered first as that is on a container swing lift semi trailer	OK ☑
The 1000 and 500 KVA Generator dimensions are 6 m x 2.4 m x 2.8 m	OK ☑

Electrical Contractor initial:.....

QUU Commissioning Manager initial.....

The 300 KVA Generator dimensions are 5 m x 1.7 m x 2.5 m	OK ☑
The fuel cell dimensions are 2 m x 2.2 m x 1.3 m	OK ☑
When all generators and fuel cells are in place install barricading around them	OK ☑
While installing these cables label the Genset they are fed from and what phase colour they are.	OK ☐
On the 1000 KVA genset run 2 x sets of 240 mm cables to the Digester room cable length 75 m The cables will run along ground to the walkway leading into Digester switch room cables will then loop over handrail and into the switch room.	OK ☑
On the 500 KVA genset run 1 x set of 120 mm and 2 x sets of 35 mm cables to the HV switch room cable length 50 m The cables will run along ground and the through the personal access door to switch room, they will then feed into the manhole in corner of room and under the switch room floor to the 415 V switchboard	OK ☑
On the 300 KVA genset run 1 x set of 120 mm cables to the load centre located outside the HV switch room cable length 25m and then from the load centre the cables will run along ground and the through the personal access door to switch room, they will then feed into the manhole in corner of room and under the switch room floor to the 415 V switchboard	OK ☑
Place barricading around all cables to prevent a trip hazard	OK ☐
Before connecting any cables test generators to confirm they work ALL.	OK ☑
Once all generators are tested shut down and lock out	OK ☑
On Genset 1 1000 KVA connect cables at genset	OK ☑
On Genset 2 500 KVA connect cables at genset	OK ☑
On Genset 3 300 KVA connect cables at genset	OK ☑
Install load centre outside of HV switch room in an area that will not be in the way	OK ☑
Connect 1 x set of 120 mm cables from Genset 3 300 KVA to incoming breaker	OK ☑
Connect 3 x sets of 35 mm cables to 3 outgoing breakers and lock off	OK ☑

Electrical Contractor initial:.....

QUU Commissioning Manager initial:.....

Confirm that there are enough Nuts bolts washers to enable the generator cables and the cables feeding the distribution boards to be bolted together inside a temporary conduit sleeve. This will occur under the HV switch room floor.	OK ☑

1.3.1 EXISTING SWITCHBOARD PARAMETERS

Contractor Task	Outcome
This switchboard is fed from Transformers 3,4, and 5 Record the voltages of each transformer	OK ☑
Transformer 3.	U.___ V.____ W.____
Transformer 4.	U.___ V.____ W.____
Transformer 5.	U.___ V.____ W.____
Record the phase rotation of each Transformer	OK ☐
Transformer 3.	↻☐ ↺☒
Transformer 4.	↻☐ ↺☒
Transformer 5.	↻☐ ↺☒
Tasks for DAY1 are now complete confirm with QUU operators that they are ready to start shutting down power to the plant starting at 4.00 am on Tuesday morning. Confirm that Gary Say will be onsite to shut down the transformers	OK ☐

DIGESTION AREA
ESSENTIAL SERVICES (2x ARMOURED CABLES)
BLOWERS & ENGINE HOUSE
MCP 1
MCP 2
COGEN MCC
BLOWERS 1-2-3 AUX

Electrical Contractor initial:.....

QUU Commissioning Manager initial:.....

2 DAY 2 – COMMISSION TEMPORARY POWER

Contractor Task	Outcome
Blowers No 1, 2 and 3 Auxiliaries circuit breaker	
Blowers No 1, 2 and 3 Auxiliaries will need to be shut down at 4.00 am so be on site early	OK ☑
Consult with Gary Say and the operator about shutting down the Blowers	OK ☑
Gary Say to shut down Transformer 3	OK ☑
At 415 Main Switchboard Turn off Blowers No 1, 2 and 3 Auxiliaries circuit breaker	OK ☑
Remove rear lift off panel and test Transformer 3 incomers for dead	DEAD ☐
Test Blowers No 1, 2 and 3 Auxiliaries circuit breaker for dead	DEAD ☐
Label each phase and neutral with appropriate colour tape Label each cable with duct tape indicating that it feeds the Blowers No 1, 2 and 3 Auxiliaries	OK ☑
Unbolt the cables from the circuit breaker and lower under floor bolt them on to cable set 3 from the Genset 3 300 KVA. Cover with conduit sleeve and tape so conduit does not move	OK ☑
Unlock Genset 3 - 300 KVA and start	OK ☑
At load centre unlock circuit breaker feeding Blowers and turn on	OK ☑
Inform the operators that the Blowers can be turned on	OK ☑
When operator is satisfied that blowers are operating correctly move on to next area	OK ☑
CoGen MCC along with MCP1 and MCP2 feeders **Site Main Switchboard (Engine and Blower House) circuit breaker**	

Electrical Contractor initial:.....

QUU Commissioning Manager initial:.....

The CoGen and Engine/Blower House will need to be done concurrently	OK ☑
Gary Say to shut down Transformer 4	OK ☑
At 415 Main Switchboard turn off CoGen MCC circuit breaker , COGen MCP1 circuit breaker and COGen MCP2 circuit breaker	OK ☑
At 415 Main Switchboard turn off Engine and Blower House circuit breaker	OK ☑
Remove rear lift off panel and test Transformer 4 incorners for dead	DEAD ☑
Test CoGen MCC circuit breaker for dead	DEAD ☑
Test COGen MCP1 circuit breaker for dead	DEAD ☑
Test COGen MCP2 circuit breaker for dead	DEAD ☑
Test Engine and Blower House circuit breaker for dead	DEAD ☑
For the CoGen MCC label each phase and neutral with appropriate colour tape Label each cable with duct tape indicating that it feeds the CoGen MCC	OK ☑
For the CoGen MCP1 label each phase and neutral with appropriate colour tape Label each cable with duct tape indicating that it feeds the CoGen MCP1	OK ☑
For the CoGen MCP2 label each phase and neutral with appropriate colour tape Label each cable with duct tape indicating that it feeds the CoGen MCP2	OK ☑
For the Engine and Blower House label each phase and neutral with appropriate colour tape Label each cable with duct tape indicating that it feeds the Engine and Blower House	OK ☑
For the CoGen MCC Unbolt the cables from the circuit breaker and lower under floor bolt them on to cable set 1 from the Genset 2 500 KVA. Cover with conduit sleeve and tape so conduit does not move	OK ☑
For the CoGen MCP1 Unbolt the cables from the circuit breaker and lower under floor bolt them on to cable set 2 from the Genset 2 500 KVA. Cover with conduit sleeve and tape so conduit does not move	OK ☑
For the CoGen MCP2 Unbolt the cables from the circuit breaker and lower under floor bolt them on to cable set 3 from the Genset 2 500 KVA. Cover with conduit sleeve and tape so conduit does not move	OK ☑

Electrical Contractor initial:.....

QUU Commissioning Manager initial:.....

For the Engine and Blower House Unbolt the cables from the circuit breaker and lower under floor bolt them on to cable set 2 from the Genset 3 300 KVA. Cover with conduit sleeve and tape so conduit does not move	OK ☑
Unlock Genset 2 - 500 KVA and start	OK ☑
Inform the operators that the Cogen can be turned on	OK ☑
When operator is satisfied that Cogen is operating correctly move on to next area	OK ☑
At load centre unlock circuit breaker feeding Engine and Blower House and turn on	OK ☑
When operator is satisfied that Engine and Blower House is operating correctly move on to next area	OK ☑
Digestor Switchboard	
The Digestor switchboard has the capacity for two incomers but only one is used therefore at the Digestor switchboard identify the unused incomer main switch	OK ☑
Open the door to the unused main switch and test for dead	DEAD ☑
Connect the 2 x sets of 240 mm cables to this unused incomer	OK ☑
When complete inform the operator who will shut down the board	OK ☑
At the 415 Main Switchboard turn off the Digestor Switchboard circuit breaker and lock off	OK ☑
On the Digestor Switchboard switch over to the new incomer	OK ☑
Unlock Genset 1 1000 KVA and start	OK ☑
inform the operator who will start devices fed off this board	OK ☑
When operator is satisfied that Digestor Switchboard is operating correctly move on to next area	OK ☑

Electrical Contractor initial:.....

QUU Commissioning Manager initial:.....

Essential Services Switchboard No 1 circuit breaker	
The Essential Services Switchboard is fed by two feeder cables Feeder 2 has temporarily been disconnected and is labelled below the switchboard	OK ☑
Gary Say to shut down Transformer 5	OK ☑
At 415 Main Switchboard Turn off Essential Services Switchboard No 1 circuit breaker	OK ☑
Remove rear lift off panel and test Transformer 5 incomers for dead	DEAD ☑
Test Essential Services Switchboard No 1 circuit breaker for dead	DEAD ☑
Label each phase and neutral with appropriate colour tape Label each cable with duct tape indicating that it feeds the Essential Services Switchboard	OK ☑
Unbolt the cables from the circuit breaker and lower under floor bolt them on to cable set 1 from the Genset 3 300 KVA. Cover with conduit sleeve and tape so conduit does not move	OK ☑
At load centre unlock circuit breaker feeding the Essential Services Switchboard and turn on	OK ☑
Inform the operators that the Essential Services Switchboard can be turned on	OK ☑
When operator is satisfied that Essential Services Switchboard is operating correctly move on to next area	OK ☑
Digestor Switchboard circuit breaker	
At 415 Test Digestor Switchboard circuit breaker for dead	DEAD ☑
Label each phase and neutral with appropriate colour tape Label each cable with duct tape indicating that it feeds the Digestor Switchboard	OK ☑
Unbolt the cables from the circuit breaker and lower under floor Cover with conduit sleeve and tape so conduit does not move	OK ☑
At this stage all switchboards are running on generator power and there is no power to the 415 Main Switchboard	OK ☑

Electrical Contractor initial:.....

QUU Commissioning Manager initial:.....

Incoming cables from Transformers	
Transformer 3 Incomer Cables Label each phase and neutral with appropriate colour tape Label each cable with duct tape indicating that it is from Transformer 3	OK ☑
Unbolt the cables from the Main Switch and lower under floor Cover with conduit sleeve and tape so conduit does not move	OK ☑
Transformer 4 Incomer Cables Label each phase and neutral with appropriate colour tape Label each cable with duct tape indicating that it is from Transformer 4	OK ☑
Unbolt the cables from the Main Switch and lower under floor Cover with conduit sleeve and tape so conduit does not move	OK ☑
Transformer 5 Incomer Cables Label each phase and neutral with appropriate colour tape Label each cable with duct tape indicating that it is from Transformer 5	OK ☑
Unbolt the cables from the Main Switch and lower under floor Cover with conduit sleeve and tape so conduit does not move	OK ☑
At this stage test all outgoing cables and note results on the test pages at the rear of this commissioning plan.	OK ☑

3 DAY 2 – REMOVE OLD SWITCHBOARD AND INSTALL NEW

DAY 3.

Freo Cranes are responsible for removing old switchboard and installed the new switchboard in place.	OK ☑
Before Freo Cranes start any work have any team members inducted to site	OK ☑
Freo Cranes to provide any SWMS and risk assessments	OK ☑
Assist Freo Cranes team to install new switchboard	OK ☑
Old Switchboard to be transported to: TBA FREO	OK ☑

Electrical Contractor initial:..... QUU Commissioning Manager initial:.....

4 DAY 3 – SWITCHBOARD INSTALLATION

Once the new switchboard is in place connect Transformer incoming cables	OK ☑
Transformer 3 Incomer Cables Bolt onto Main Switch	OK ☑
Transformer 4 Incomer Cables Bolt onto Main Switch	OK ☑
Transformer 5 Incomer Cables Bolt onto Main Switch	OK ☑
Confirm all 3 main switches are off and locked out	OK ☐
Arrange for Gary Say to energise all Transformers	OK ☑
CoGen MCC along with MCP1 and MCP2 feeders	
Arrange for operator to shut down CoGen Plant	OK ☑
When CoGen Plant is de-energised shut down Genset 2 500 KVA and lock out	OK ☑
Connect the CoGen MCC, MCP1 and MCP2 cables to the correct circuit breakers on the new switchboard	OK ☑
Unlock Main Switch for Transformer 3 and energise	OK ☑
Inform the operator that the Cogen Plant can be energised.	OK ☑
Once the operator is satisfied that the CoGen Plant is operating correctly move on to the next stage.	OK ☑
Digestor Switchboard feeder	
Test Digestor Switchboard feeder cables for dead	DEAD ☑

Electrical Contractor initial:.....

QUU Commissioning Manager initial:.....

Connect the Digestor Switchboard feeder cables to the correct circuit breakers on the new switchboard	OK ☑

Essential Services Switchboard No 1 Feeder	
Arrange for operator to shut down equipment on the Essential Services Switchboard	OK ☑
When Essential Services Switchboard has been de-energised at load centre turn off circuit breaker and lock out	OK ☑
Connect the Essential Services Switchboard cables to the correct circuit breakers on the new switchboard	OK ☑
Unlock Main Switch for Transformer 5 and energise	OK ☑
Inform the operator that the Essential Services Switchboard can be energised.	OK ☑
Once the operator is satisfied that the equipment on the Essential Services Switchboard is operating correctly move on to the next stage.	OK ☑
Digestor Switchboard Feeder	
Arrange for operator to shut down Digestor Switchboard	OK ☑
When the Digestor Switchboard is de-energised shut down Genset 1 1000 KVA and lock out	OK ☑
At Digestor Switchboard test for dead on incomers 2 cables	DEAD ☑
Remove the temporary generator cables	OK ☑
At 415 Main Switchboard energise the circuit breaker for the Digestion Switchboard	OK ☑
Arrange for operator to start up equipment on the Digestion Switchboard	OK ☑

Electrical Contractor initial:.....

QUU Commissioning Manager initial:.....

Once the operator is satisfied that the equipment on the Digestion Switchboard is operating correctly move on to the next stage.	OK ☑
Site Main Switchboard (Engine and Blower House) Feeder	
Arrange for operator to shut down equipment on the Site Main Switchboard (Engine and Blower House)	OK ☑
When the Site Main Switchboard is de-energised on the load centre turn off the circuit breaker and lock out	OK ☑
Connect the Site Main Switchboard cables to the correct circuit breakers on the new switchboard	OK ☑
Blowers No 1, 2 and 3 Auxiliaries Feeder	
Arrange for operator to shut down equipment on the Blowers No 1, 2 and 3 Auxiliaries	OK ☑
When the Blowers No 1, 2 and 3 Auxiliaries Switchboard is de-energised, on the load centre turn of the circuit breaker and lock out	OK ☑
The cables for the Blowers No 1, 2 and 3 Auxiliaries Switchboard may need to be extended.	OK ☑
Connect the Blowers No 1, 2 and 3 Auxiliaries Switchboard cables to the correct circuit breakers on the new switchboard	OK ☑
Essential Services Switchboard No 2 Feeder	
Locate the Essential Services Switchboard No 2 Feeder cables under the switchboard and test for dead	DEAD ☑
Connect the Essential Services Switchboard No 2 Feeder cables to the correct circuit breakers on the new switchboard	OK ☑
Unlock Main Switch for Transformer 4 and energise	OK ☑

Electrical Contractor initial:.....

QUU Commissioning Manager initial:.....

Inform the operator that the Blowers No 1, 2 and 3 Auxiliaries Switchboard and Site Main Switchboard (Engine and Blower House) can be energised	OK ☑
Shut down Genset 3 300 KVA and lock out	OK ☑
All switchboards are now operating off of the new switchboard.	OK ☑

5 DAY 4 – DEMOBILISE SITE

Pack up cables for Generators etc Total Generators to pick up equipment etc	OK ☐

Electrical Contractor initial:.....

QUU Commissioning Manager initial:.....

SELECTRIC QUEENSLAND
SE Electric Group (Qld) Pty Ltd
A Division of the Triventage Group
19 Elliott Street, Albion QLD 4010
P 07 3256 1572 F 07 3256 1533
E mail.qld@selectric.com.au ABN 45 124 414 768 REC 73286
www.triventage.com.au

TEST SHEET - TEST BEFORE YOU TOUCH

CUSTOMER NAME: QUU

SWITCHBOARD ID: MSB

DATE: 16-4-15

CUSTOMER ADDRESS: LUGGAGE POINT WWTP

PROJECT NO: 43402595.

C/B No.	Cable Size	C/B Size	Circuit Description	Visual Inspection	Correct Circuit Connection	Earth Continuity	A - E M Ohms	A - N M Ohms	A - E Volts	A - N Volts	Phase to Phase Volts	RCD TEST Ma	RCD TEST Ms	Fault Loop Impedendance Measurement
MSB	2x400	1250	TRANS 5	✓	✓		<200	<200	240	255	415			0.09
MSB	2x400	1250	TRANS 4	✓	✓		<200	<200	240	255	415			0.09.
MSB	2x400	1250	TRANS 4	✓	✓		<200	<200	240	255	415.			0.09.
Q10	4x300A	800A	DIGESTER	✓	✓		8M	8M	240	256	415			0.08
Q12	2x120	400A	ESSENTIAL 1	✓	✓		50M	100M.	250	255	415			0.09
Q14	240	400A	SITE MAIN SW BOARD FEEDER	✓	✓		<200M	<200M.	250	255	415			0.09
Q15	120	250A	BLOWER AUX SUPPLY	✓	✓		80M	80M	240	255	415			0.14
Q16	2x120	400A	ESSENTIAL 2	✓	✓		50M	50M	240	255	415			0.10
Q18	500	400A	COGEN MCC FEED	✓	✓		<200	<200	240	255	415			0.10
Q19	35	125A	MCP1 + A1 FEEDER	✓	✓		<200	<200	240	255	415			0.10
Q21	35.	125A	MCP2 + A1 FEEDER	✓	✓		<200	<200	240	256	415			0.08

TEST EQUIPMENT: MEGGER, LOOP

NAME: A. WALMSLEY

SERIAL NO: 571380

LICENCE NO: A30123

TEST DATE DUE: 5-6-15.

SIGNATURE:

Electrical Contractor initial:.....

QUU Commissioning Manager initial:.....

Water Services Engineering
(WSE) Pty Ltd
ABN 48 149 609 049

POWER SYSTEM ANALYSIS AND PROTECTION COORDINATION REPORT FOR QUEENSLAND URBAN UTILITIES

LUGGAGE POINT STP-415V MAIN AUX. SWBD

Author: Rahim Janfada (RPEQ # 5192)

Client: QUU

Revision: 1 (23-03-2015)

Date of Issue: March 2015

WSE Pty Ltd

ABN 48 149 609 049
Level 8, 269 Wickham Street
Fortitude Valley, QLD 4006
PO Box 487
Aspley, QLD 4034 Australia
Telephone: 07 3257 1567
Facsimile: 07 3353 6472
International: +61 7 3257 1567
Website: www.wse.net.au

Document Revision History

Date	Version	Description	Author	Reviewer
23/03/2015	*Rev.1*	*Final Copy for Installation*	*Rahim Janfada*	*Kamran Beygi*

"© 2014 WSE Pty Ltd All Rights Reserved. Copyright in the whole and every part of this document belongs to WSE Pty Ltd and may not be used, sold, transferred, copied or reproduced in whole or in part in any manner or form or in or on any media without the prior written consent of WSE Pty Ltd."

Table of Contents

1 INTRODUCTION 4

2 LUGGAGE POINT STP – 415V MAIN AUXILIARIES SWITCHBOARD POWER SYSTEM ANALYSIS 5

2.1 LUGGAGE POINT STP – NEW 415V MAIN AUX. SWITCHBOARD DESIGN PARAMETERS CHECK 9

2.2 POWER SYSTEM ANALYSIS PROCEDURE 9

2.3 PROTECTION STUDY - 415V AUX. SWITCHBOARD PROTECTION DEVICES SETTINGS 9

2.3.1 Time Current Curves 9

2.3.2 Protection Devices Setting Parameters 13

3 ARC FLASH EVALUATION AND PPE SELECTION 17

Table Of Figures

Figure 1 – Substation S1 & New 415V Main Auxiliaries Switchboard –One Line Diagram with Input Data 6

Figure 2 – Substation S1 & New 415V Main Auxiliaries Switchboard –One Line Diagram with Load Flow and Voltage Drop 7

Figure 3 - Substation S1 & New 415V Main Auxiliaries Switchboard –One Line Diagram with Short Circuit Fault Currents 8

Figure 4 - Bus 1 HV Fuse and Incomer Q1 - TCC 10

Figure 5 - Bus 1 Largest CBs - TCC 10

Figure 6 - Bus 2 HV Fuse and Incomer Q3 & Feeder CB Q14 - TCC 11

Figure 7 - Bus 2 Incomer Q3 & Feeder CB Q15 - TCC 11

Figure 8 - Bus 3 Incomer Q5 & HV Fuses - TCC 12

Figure 9 - Bus 3 Incomer Q5 & Feeder CBs Q18&19 - TCC 12

Figure 10 – Arc Flash Calculation & PPE Description Table 18

Figure 11: Recommended Label 19

1 INTRODUCTION

Luggage Point STP-415V Main Aux. SWBD is a new switchboard manufactured by SJ Electric which is going to replace the existing old switchboard. Water Services Engineering (WSE) has been engaged to carry out a power system analysis and protection Coordination study of the new switchboard and also to carry out an Arc Flash Evaluation study to:

- Provide details of the fault levels for the new switchboard;
- Check that the new protective devices have been set to their optimal settings or otherwise recommend the optimal new settings; and
- Provide Arc Flash rating of the switchboard to determine PPE type required for maintenance.

The PTW - Power Tools software program has been used for these studies that comprise of:

- DAPPER program is used for power system analysis and fault studies;
- CAPTER program is used to prepare Time Current Curves (TCC) using results of short circuit fault studies carried out by DAPPER.
- Arc Flash program is used to determine Category of the switchboard.

The following have been completed for this site:

System Topology:	A comprehensive system topology has been prepared with details of major equipment.
Max Demand and Voltage Drop:	Using the input data, a load flow and voltage drop study has been carried out to determine maximum demand and voltage drop.
Protection Co-ordination Study:	The results of Load Flow and Voltage Drop study was used to carry out the short circuit fault currents and then these results were used to carry out the protection coordination study.
Arc Flash Evaluation study:	Follow on from the fault studies an Arc Flash Evaluation Study has been carried out to determine the incident energy levels on each point of the pump station electrical equipment to establish the PPE requirements for maintenance of the pump station.

2 LUGGAGE POINT STP – 415V MAIN AUXILIARIES SWITCHBOARD POWER SYSTEM ANALYSIS

11kV power supply to the 415V Auxiliaries Switchboard is fed from the 11kV Ring Substation S1. The Substation S1 comprises three off 750kVA, 11kV/415V transformers with each transformer feeding one section of the Auxiliaries Switchboard (with Bus-Ties open) as follows:

- AUX T3 Transformer feeding 415V Aux. SWBD Bus 3;
- AUX T4 Transformer feeding 415V Aux. SWBD Bus 2;
- AUX T5 Transformer feeding 415V Aux. SWBD Bus 1;

The new 415V Main Auxiliaries Switchboard incorporates the following circuit breakers:

Q1 :1250A Terasaki type “AR212S”, Air Circuit Breaker (ACB) on the Incomer of Main AUX SWB BUS 1;

Q3 : 1250A Terasaki type “AR212S” , Air Circuit Breaker (ACB) on the Incomer of Main AUX SWB BUS 2;

Q5 : 1250A Terasaki type “AR212S” , Air Circuit Breaker (ACB) on the Incomer of Main AUX SWB BUS 3;

Q2 and Q4 : 2000A NHP type “SLB20003P”, Load Break Switches on the Bus Ties 1&2;

Q10 (BUS 1) : 800A Terasaki type “S800RE”, MCCB on the feeder to Digester MCC;

Q12 (BUS 1) : 400A Terasaki type “S400GE”, MCCB on the feeder to Essential Services Switchboard;

Q16 (BUS 2) : 400A Terasaki type “S400GE”, MCCB on the feeder to Essential Services Switchboard;

Q14 (BUS 2) : 400A Terasaki type “S400GE”, MCCB on the feeder to Site Main Switchboard;

Q15A (BUS 2) : 250A Terasaki type “S250PE”, MCCB on the feeder to Blowers Auxiliaries Switchboard;

Q18 (BUS 3) : 400A Terasaki type “S400GE”, MCCB on the feeder to Cogen MCC;

Q19 (BUS 3) : 125A Terasaki type “S250PE”, MCCB on the feeder to Cogen 1 Essential Switchboard;

Q21 (BUS 3) : 125A Terasaki type “S250PE”, MCCB on the feeder to Cogen 2 Essential Switchboard;

Q13 : 250A Terasaki type “S250PE”, MCCB (Spare)

Q11, Q17 and Q20 : 400A Terasaki type “S400GE”, MCCB (Spare)

The following one line diagrams show details of Input Data, Load Flow & Voltage Drop and Short Circuit Fault Currents for the new 415V Auxiliaries Switchboard fed from 11kV Substation S1

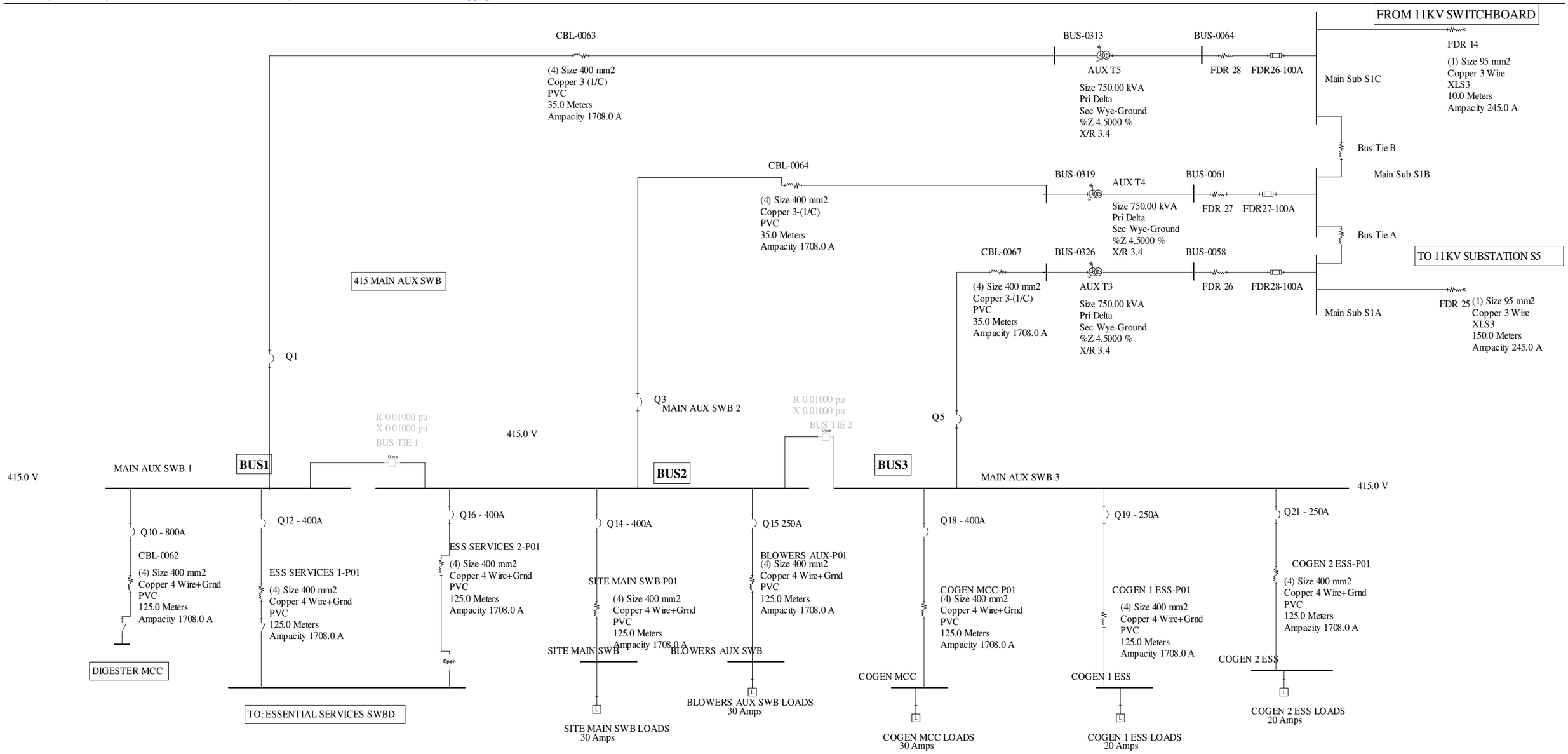

Figure 1 – Substation S1 & New 415V Main Auxiliaries Switchboard –One Line Diagram with Input Data

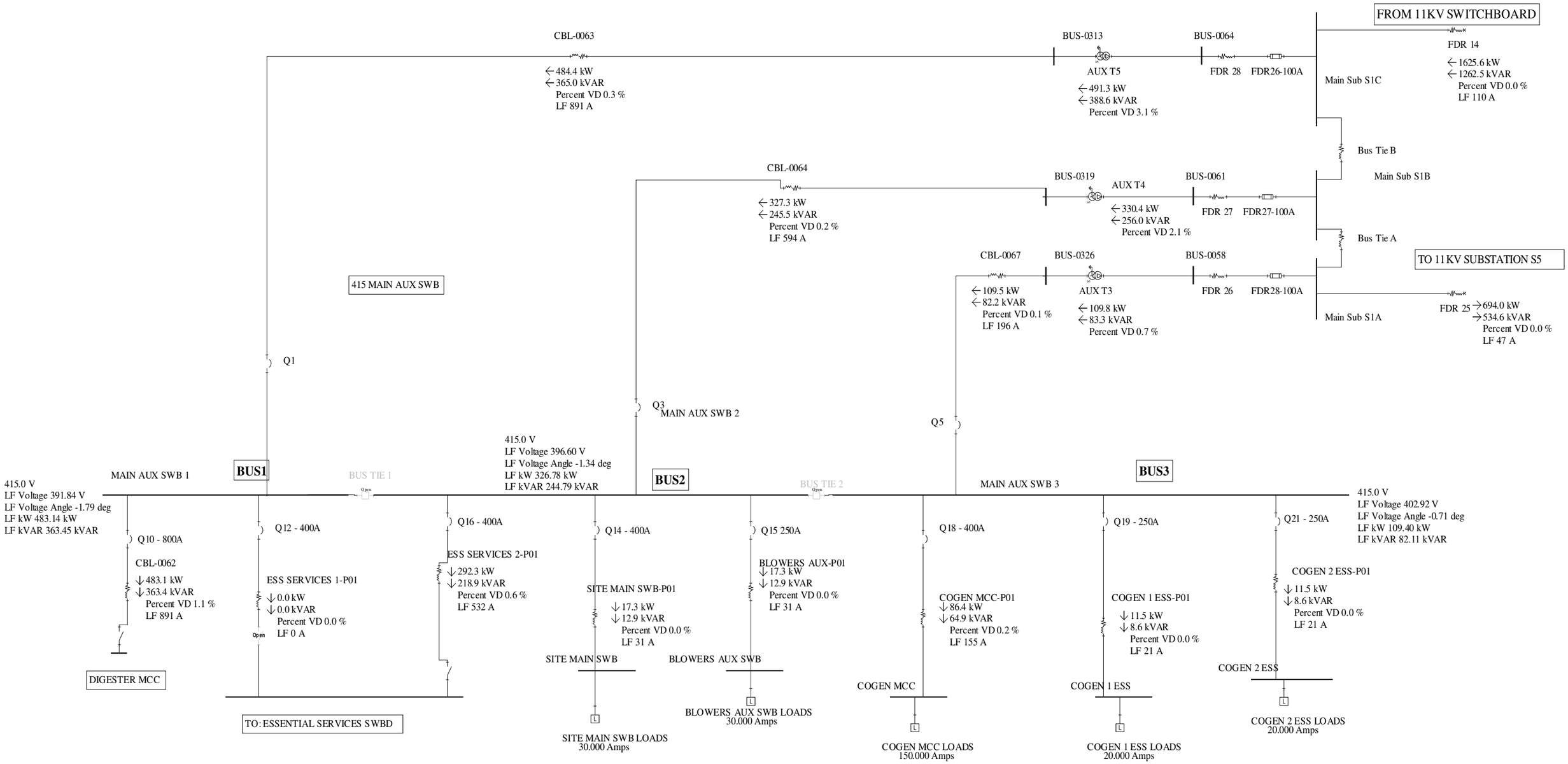

Figure 2 – Substation S1 & New 415V Main Auxiliaries Switchboard –One Line Diagram with Load Flow and Voltage Drop

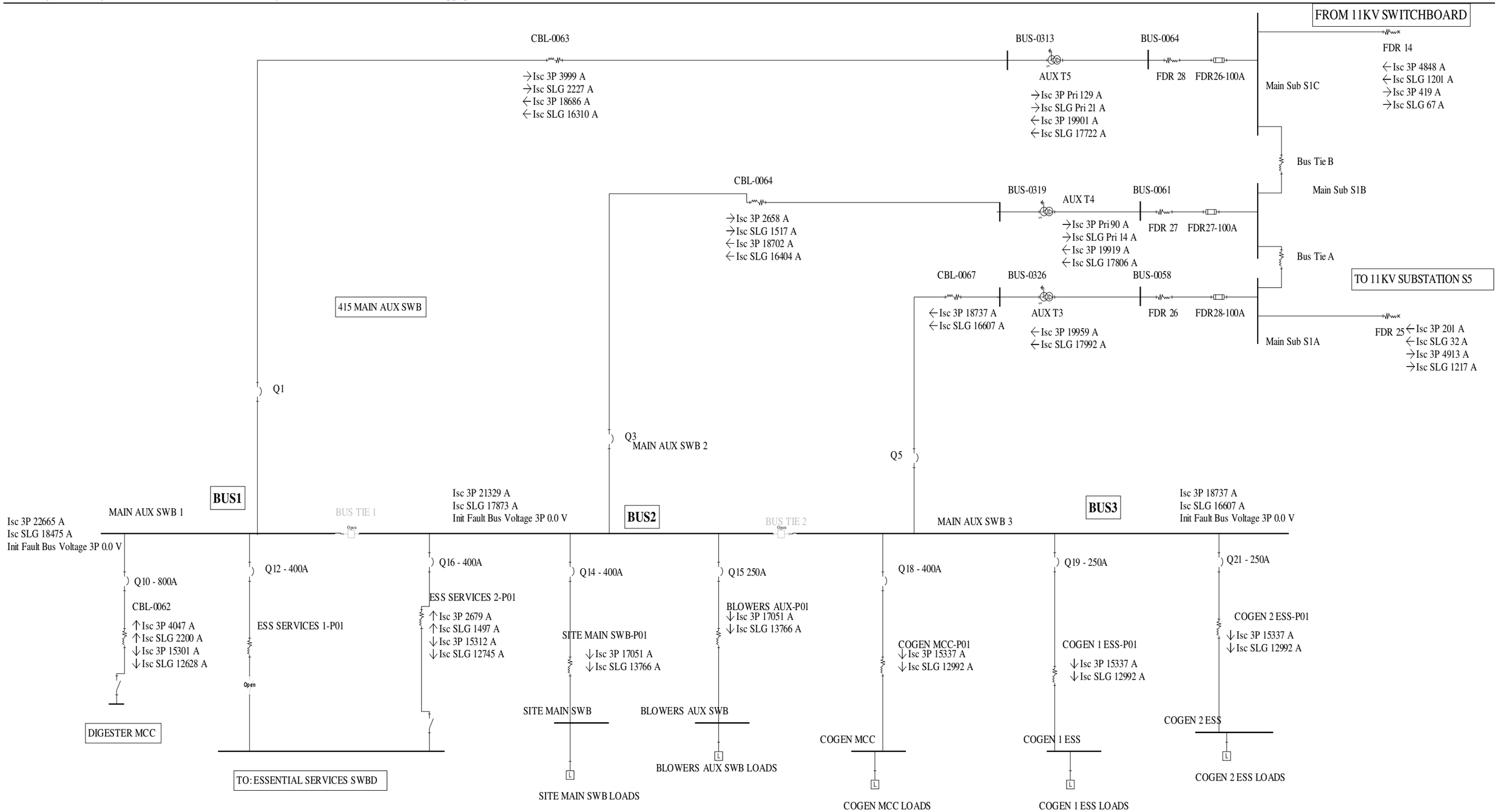

Figure 3 - Substation S1 & New 415V Main Auxiliaries Switchboard –One Line Diagram with Short Circuit Fault Currents

Q-Pulse Id: TMS1580 Active: 23/02/2016

2.1 Luggage Point STP – NEW 415V Main Aux. Switchboard Design Parameters Check

- **Max Demand** - Maximum demand load of the new 415V Aux. Switchboard is:
    - Load flow from TX5 to Bus 1 of the 415V Aux. Switchboard: 484.4kW (891A);
    - Load flow from TX4 to Bus 2 of the 415V Aux. Switchboard: 327.3kW (594A);
    - Load flow from TX3 to Bus 3 of the 415V Aux. Switchboard: 109.5kW (196A);
- **Voltage Drop**: there is no issue with voltage drop on the Substation S1 feeders to the 415V Auxiliaries Switchboards.
- **Fault Levels**: on the new 415V Aux. Switchboards:
    - 3 phase fault level on the Bus 1 is: 22.665kA;
    - 1 phase to ground fault level on the Bus 1 is: 18.475kA;
    - 3 phase fault level on the Bus 2 is: 21.329kA;
    - 1 phase to ground fault level on the Bus 2 is: 17.873kA;
    - 3 phase fault level on the Bus 3 is: 18.737kA;
    - 1 phase to ground fault level on the Bus 3 is: 16.607kA;

2.2 Power System Analysis Procedure

The protection devices (i.e. CBs) on each circuit shown on the one-line diagrams must be selected and set to protect the drive and cable for short circuit fault currents and also be able to automatically disconnect the fault currents on that circuit within the specified time limit as per Clause 1.5.5.3 of AS3000:2007.

The upstream circuit breakers must have discrimination with the downstream circuit breakers for fault discrimination so that the downstream device picks up the fault and trips before the upstream device and the upstream device provides back up protection in case if the downstream device fails to operate as per Clause 2.5.7.1 of AS3000:2007 which given below:

> **2.5.7 Reliability of supply**
>
> **2.5.7.1** *General*
>
> The electrical installation shall be designed to provide a reliable supply by dividing the electrical installation into appropriate circuits and selecting protective devices with appropriate discrimination so that in the event of a fault occurring, the loss of supply resulting from operation of a protective device is minimized.

For each group of similar equipment, an individual one-line diagram with their protection devices and equipment to be protected are given in the following sections.

2.3 Protection Study - 415V Aux. Switchboard Protection Devices Settings

2.3.1 Time Current Curves

Shown on the following diagrams are the Time Current Curves (TCC) for the major protection devices that provide protection to the: TX5 100A HV Fuses, Bus 1 Incomer Q1, Largest Feeder Circuit Breaker on Bus 1 and then the smaller feeder circuit breakers that will be coordinated with the upstream Main Incomer Q1. These Protection Device settings are provided in the following pages in order to achieve the protection co-ordination shown on the TCC diagram.

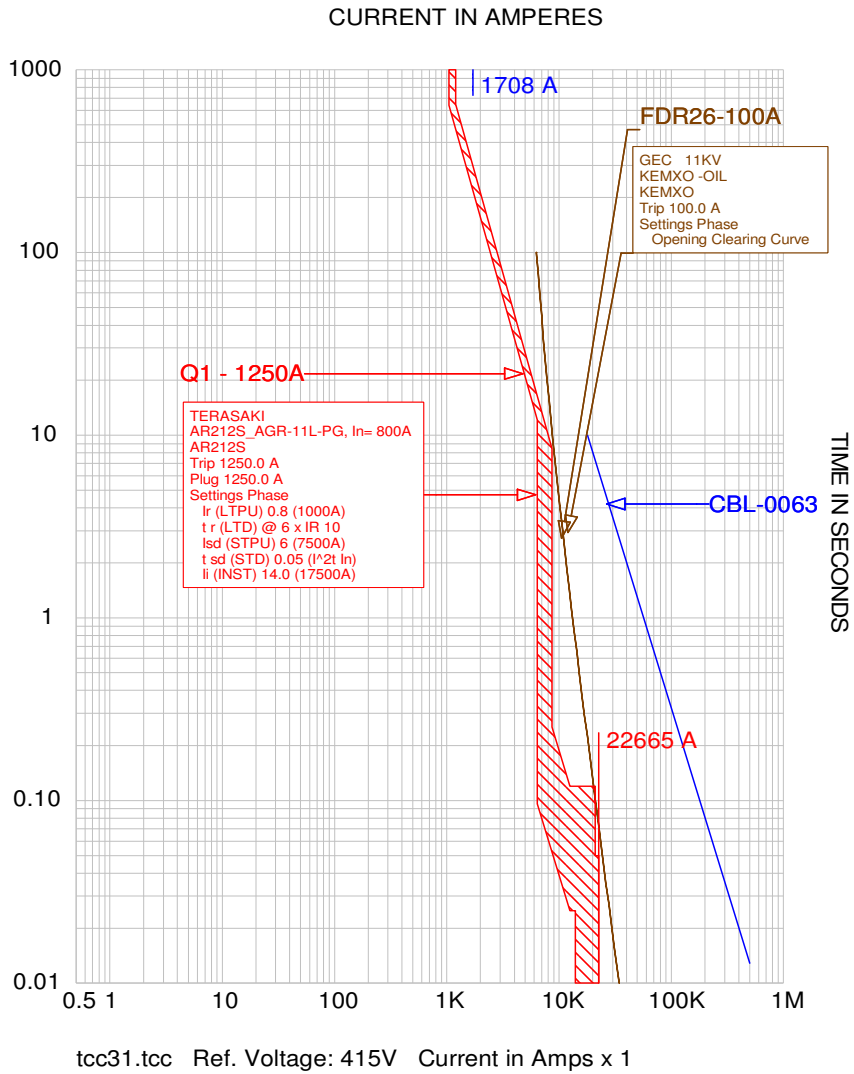

Figure 4 - Bus 1 HV Fuse and Incomer Q1 - TCC

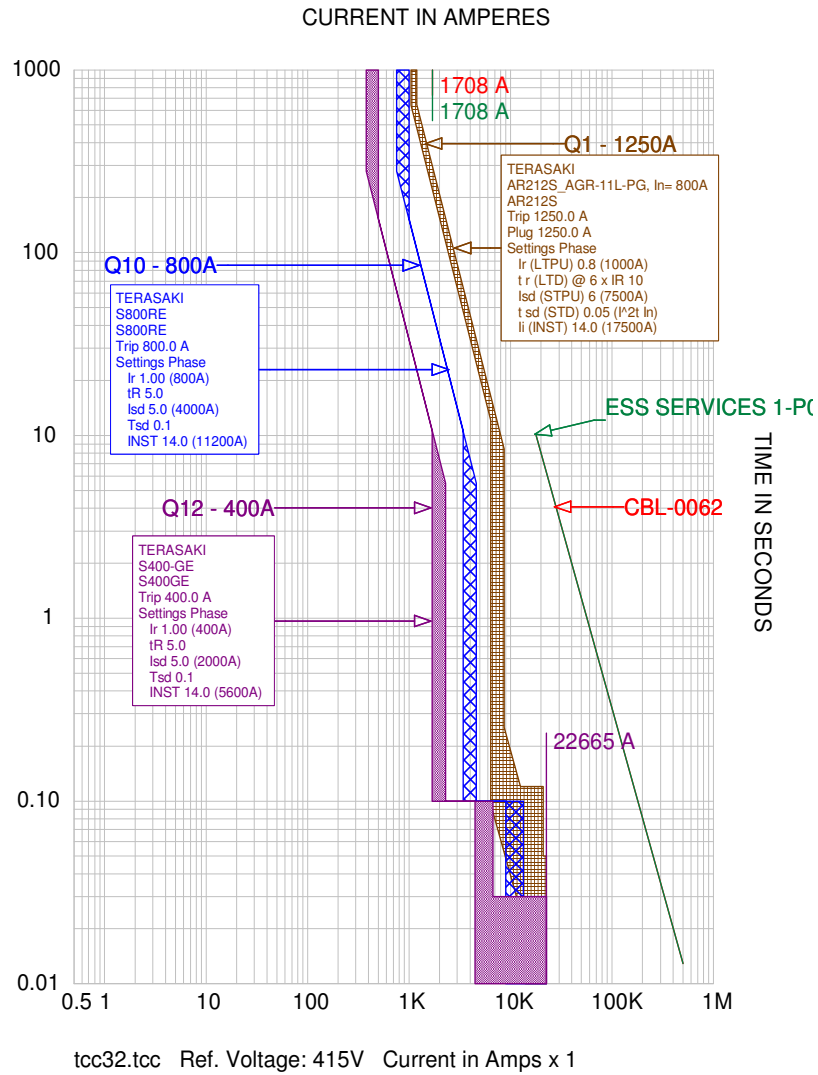

Figure 5 - Bus 1 Largest CBs - TCC

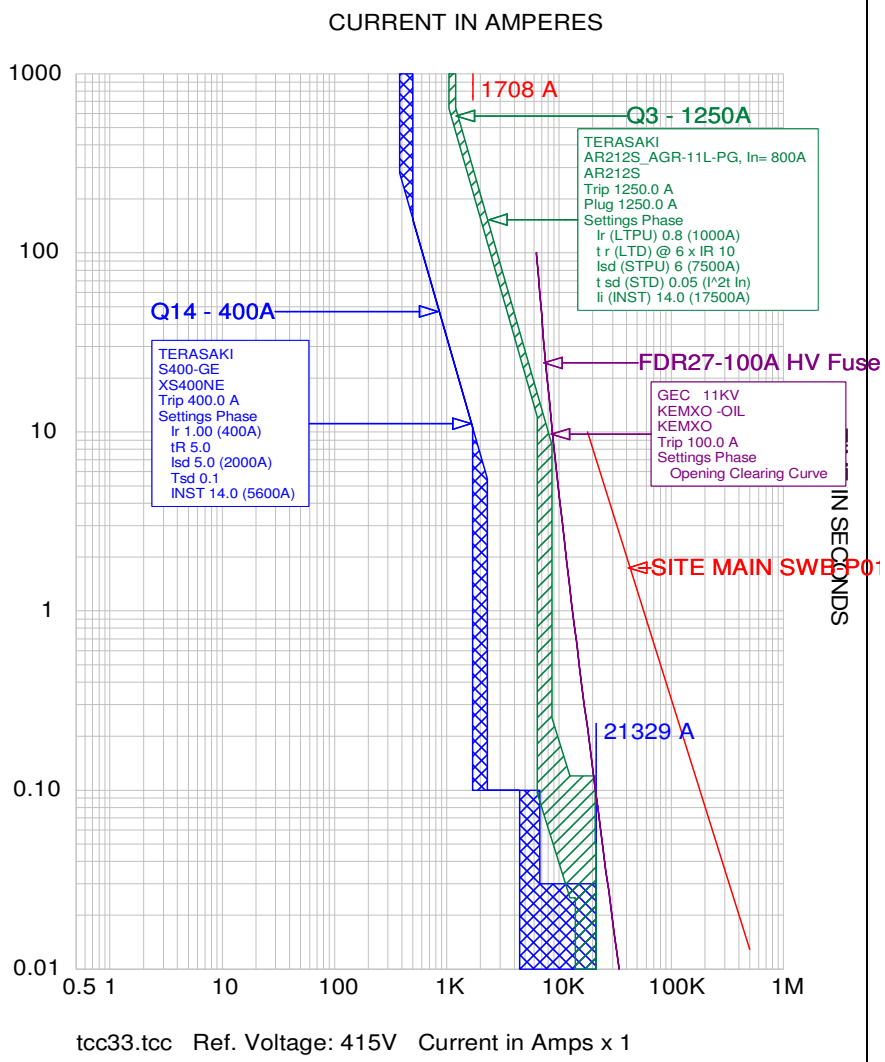

Figure 6 - Bus 2 HV Fuse and Incomer Q3 & Feeder CB Q14 - TCC

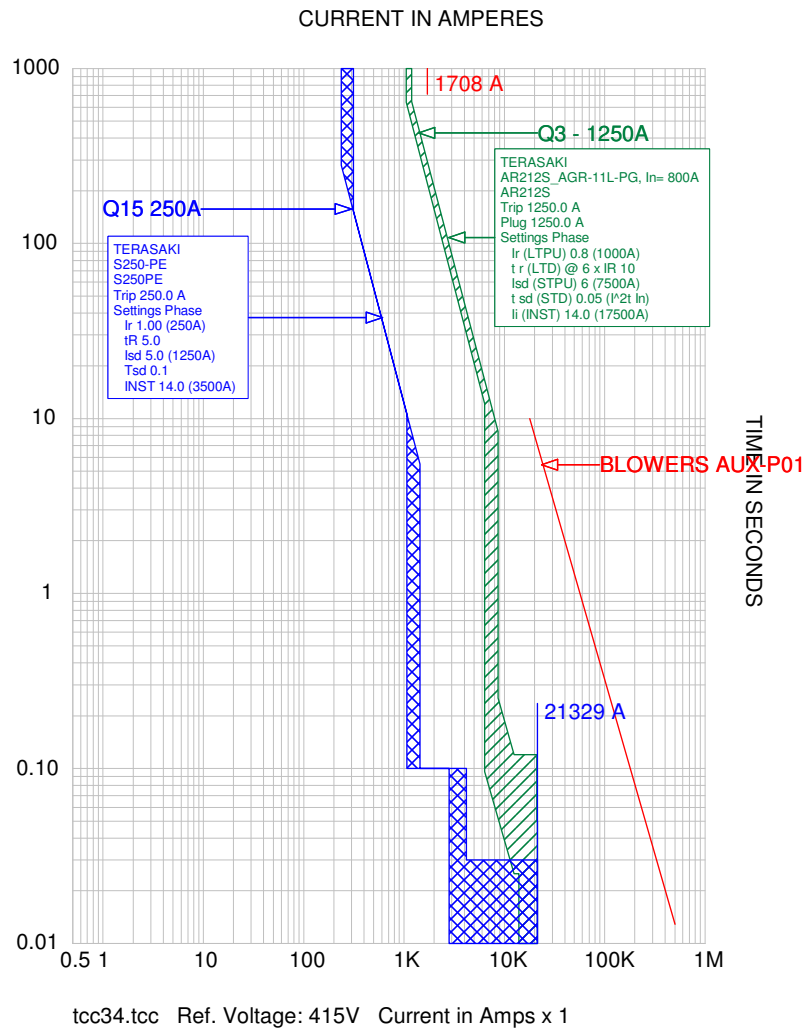

Figure 7 - Bus 2 Incomer Q3 & Feeder CB Q15 - TCC

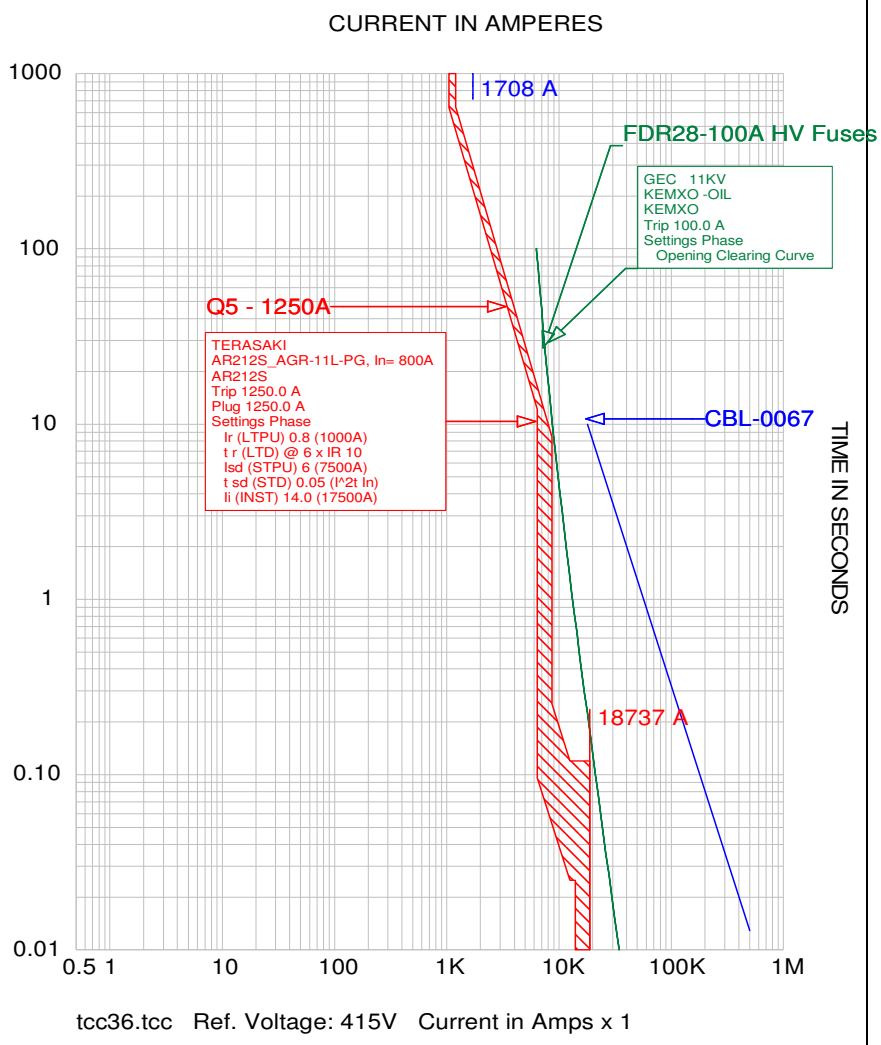

Figure 8 - Bus 3 Incomer Q5 & HV Fuses - TCC

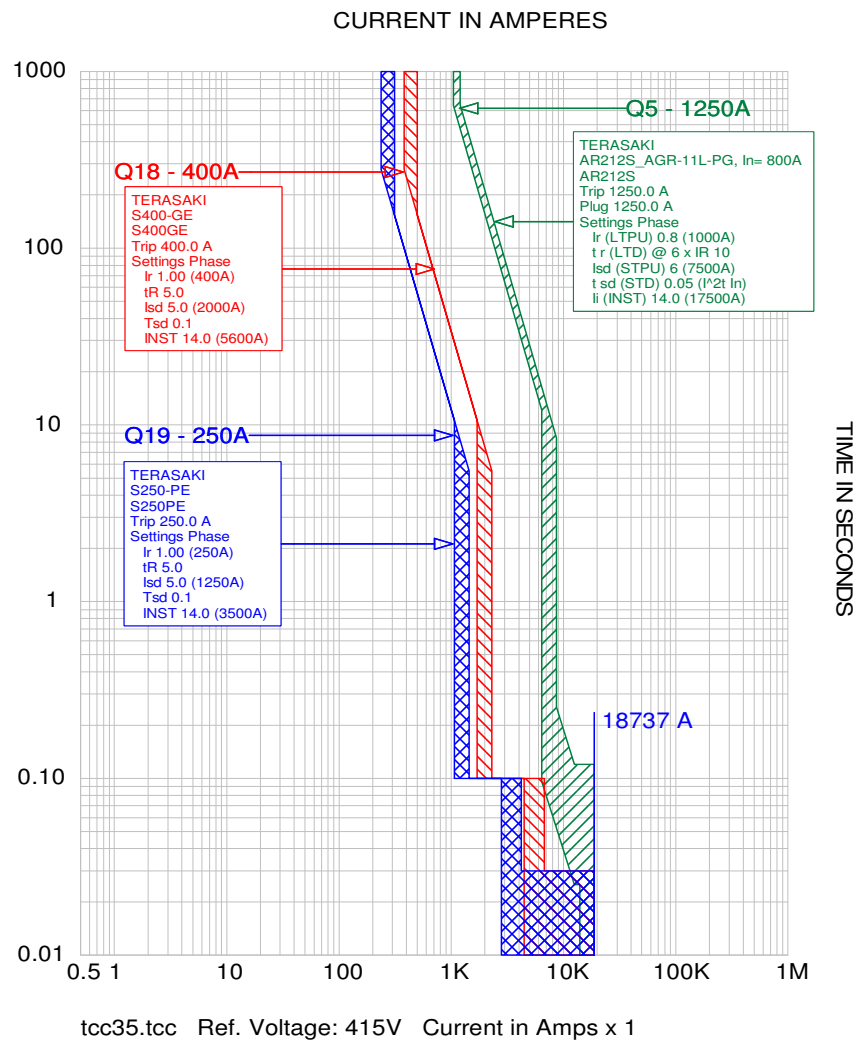

Figure 9 - Bus 3 Incomer Q5 & Feeder CBs Q18&19 - TCC

2.3.2 Protection Devices Setting Parameters

The following CAPTOR Report provides protection device settings shown on the Time Current Curves in previous sections of this report:

```
Project Name:      LUGGAGE
TCC Name:          tcc32.tcc
Reference Voltage: 415 V
Current Scale:     X 10^0
TCC Notes:
TCC Comment:
Fault Duty Option: Study Result - Bus Fault Current


-----------------------------------------------------------------------------------------
ALL INFORMATION PRESENTED IS FOR REVIEW, APPROVAL, INTERPRETATION,
AND APPLICATION BY A REGISTERED ENGINEER ONLY.
SKM DISCLAIMS ANY RESPONSIBILITY AND LIABILITY RESULTING
FROM THE USE AND INTERPRETATION OF THIS SOFTWARE.
-----------------------------------------------------------------------------------------
CAPTOR (Computer Aided Plotting for Time Overcurrent Reporting)
COPYRIGHT SKM SYSTEMS ANALYSIS, INC.  1983-2007
-----------------------------------------------------------------------------------------

-----------------------------------------------------------------------------------------
Device Name:     CBL-0062                                  TCC Name:         tcc32.tcc
Bus Name:        MAIN AUX SWB- BUS 1                       Bus Voltage:      415.0V
                                                           Curve Multiplier: 1
Time Multiplier: 1                                         Time Adder:       0
Description:     Cable Damage Curve                        Qty/Ph:           4
Size:            400                                       Cont. Temp:       90 deg C.
Material:        Copper                                    Damage Temp:      250 deg C.
-----------------------------------------------------------------------------------------
Device Name:     Q10 - 800A                                TCC Name:         tcc32.tcc
Bus Name:        MAIN AUX SWB- BUS 1                       Bus Voltage:      415.0V
Function Name:   Phase
Manufacturer:    TERASAKI
Description:     TemBreak
Type:            S800RE
AIC Rating:      70kA                                      Fault Duty:       22664.9A
Frame:           S800RE 660V 800A                          Curve Multiplier: 1
Time Multiplier: 1                                         Time Adder:       0
Sensor:          800A
Plug:
Setting: 1) Ir                    1.00         (800A)
         2) tR                    5.0
         3) Isd                   5.0          (4000A)
         4) Tsd                   0.1
         5) INST                  14.0         (11200A)
Parameter settings for the Q10 S800RE will be selected AS Ir setting will be 1.0 and the selected
Characteristics Curve will be No.4.
-----------------------------------------------------------------------------------------
Device Name:     ESS SERVICES 1-P01                        TCC Name:         tcc32.tcc
Bus Name:        MAIN AUX SWB- BUS 1                       Bus Voltage:      415.0V
                                                           Curve Multiplier: 1
Time Multiplier: 1                                         Time Adder:       0
Description:     Cable Damage Curve                        Qty/Ph:           4
Size:            400                                       Cont. Temp:       90 deg C.
Material:        Copper                                    Damage Temp:      250 deg C.

-----------------------------------------------------------------------------------------
Device Name:     Q12 - 400A                                TCC Name:         tcc32.tcc
Bus Name:        MAIN AUX SWB- BUS 1                       Bus Voltage:      415.0V
Function Name:   Phase
Manufacturer:    TERASAKI
Description:     TemBreak
Type:            S400-GE
AIC Rating:      70kA                                      Fault Duty:       22664.9A
Frame:           S400GE 690V 400A                          Curve Multiplier: 1
Time Multiplier: 1                                         Time Adder:       0
Sensor:          400A
Plug:
Setting: 1) Ir                    1.00         (400A)
         2) tR                    5.0
         3) Isd                   5.0          (2000A)
         4) Tsd                   0.1
         5) INST                  14.0         (5600A)
```

Parameter settings for the Q12 S400GE will be selected from the table below to determine the Characteristic setting of the cure which has been plotted on the TCC diagram:

In = 400A; 250A

		I_R (A)									
		LTD Pick-up current I_R		xI_n	0.4	0.5	0.63	0.8	0.9	0.95	1.0
	Characteristics			No.	1	2	3	4	5	6	7
Standard	LTD	t_R		(s)	11	21	21	5	10	19	29
					at 200% x I_R			at 600% x I_R			
	STD	I_{sd}		xI_R	2.5		5	10			
		t_{sd}		(s)	0.1				0.2		
	INST	I_i		xI_R	14(Max: 13 x I_n) Note (1)						
Option	PTA	I_p		xI_R	0.8						
		t_p		(s)	40						
	GFT	I_g		xI_n	0.2						
		t_g		(s)	0.2						
	N	I_N		xI_n	1.0						
		t_N		(s)	t_N=t_R Note(2)						

Note
(1) I_i max. = 13 x I_n. (2) Standard setting of I_N is 100% of I_n. For any other setting please specify when ordering.

From the above table Ir setting will be 1.0 and the selected Characteristics Curve will be No.4.

```
 ---------------------------------------------------------------------------------------
 Device Name:     Q1 - 1250A                                TCC Name:         tcc32.tcc
 Bus Name:        MAIN AUX SWB- BUS 1                       Bus Voltage:      415.0V
 Function Name:   Phase
 Manufacturer:    TERASAKI
 Description:     AGR-11L-PG
 Type:            AR212S_AGR-11L-PG, In= 800A
 AIC Rating:      65kA                                      Fault Duty:       22664.9A
 Frame:           AR212S 415V 1250A                         Curve Multiplier: 1
 Time Multiplier: 1                                         Time Adder:       0
 Sensor:          1250A
 Plug:            1250A
 Setting: 1) Ir (LTPU)              0.8          (1000A)
          2) t r (LTD) @ 6 x IR     10
          3) Isd (STPU)             6            (7500A)
          4) t sd (STD)             0.05        I^2 t In
          5) Ii (INST)              14.0         (17500A)

-----------------------------------------------------------------------------------------
 Device Name:     FDR26-100A                                TCC Name:         tcc31.tcc
 Bus Name:        Main Sub S1C                              Bus Voltage:      11000.0V
 Function Name:   Phase
 Manufacturer:    GEC   11KV
 Description:     TRANS/DIST
 Type:            KEMXO -OIL
 AIC Rating:      40kA                                      Fault Duty:       5241.3A
 Cartridge:       KEMXO 11000V 100A                         Curve Multiplier: 1
 Time Multiplier: 1                                         Time Adder:       0
 Size:            100A
 ---------------------------------------------------------------------------------------
 Device Name:     SITE MAIN SWB-P01                         TCC Name:         tcc33.tcc
 Bus Name:        MAIN AUX SWB- BUS 2                       Bus Voltage:      415.0V
                                                            Curve Multiplier: 1
 Time Multiplier: 1                                         Time Adder:       0
 Description:     Cable Damage Curve                        Qty/Ph:           4
 Size:            400                                       Cont. Temp:       90 deg C.
 Material:        Copper                                    Damage Temp:      250 deg C.
 ---------------------------------------------------------------------------------------
 Device Name:     Q14 - 400A                                TCC Name:         tcc33.tcc
 Bus Name:        MAIN AUX SWB- BUS 2                       Bus Voltage:      415.0V
 Function Name:   Phase
 Manufacturer:    TERASAKI
 Description:     TemBreak
 Type:            S400-GE
```

```
 AIC Rating:      18kA                                      Fault Duty:       21328.8A
 Frame:           S400GE 660V 400A                         Curve Multiplier: 1
 Time Multiplier: 1                                         Time Adder:       0
 Sensor:          400A
 Plug:
 Setting: 1) Ir                    1.00         (400A)
          2) tR                    5.0
          3) Isd                   5.0          (2000A)
          4) Tsd                   0.1
          5) INST                  14.0         (5600A)
Parameter settings for the Q14 S400GE will be selected as Ir setting will be 1.0 and the selected
Characteristics Curve will be No.4.

-------------------------------------------------------------------------------------------
 Device Name:     Q3 - 1250A                                TCC Name:         tcc33.tcc
 Bus Name:        MAIN AUX SWB- BUS 2                       Bus Voltage:      415.0V
 Function Name:   Phase
 Manufacturer:    TERASAKI
 Description:     AGR-11L-PG
 Type:            AR212S_AGR-11L-PG, In= 800A
 AIC Rating:      65kA                                      Fault Duty:       21328.8A
 Frame:           AR212S 415V 1250A                         Curve Multiplier: 1
 Time Multiplier: 1                                         Time Adder:       0
 Sensor:          1250A
 Plug:            1250A
 Setting: 1) Ir (LTPU)             0.8          (1000A)
          2) t r (LTD) @ 6 x IR    10
          3) Isd (STPU)            6            (7500A)
          4) t sd (STD)            0.05        I^2 t In
          5) Ii (INST)             14.0         (17500A)

 ---------------------------------------------------------------------------------------------
 Device Name:     FDR27-100A HV Fuses                       TCC Name:         tcc33.tcc
 Bus Name:        Main Sub S1B                              Bus Voltage:      11000.0V
 Function Name:   Phase
 Manufacturer:    GEC   11KV
 Description:     TRANS/DIST
 Type:            KEMXO -OIL
 AIC Rating:      40kA                                      Fault Duty:       5240.4A
 Cartridge:       KEMXO 11000V 100A                         Curve Multiplier: 1
 Time Multiplier: 1                                         Time Adder:       0
 Size:            100A

 ---------------------------------------------------------------------------------------------
 Device Name:     BLOWERS AUX-P01                           TCC Name:         tcc34.tcc
 Bus Name:        MAIN AUX SWB- BUS 2                       Bus Voltage:      415.0V
                                                            Curve Multiplier: 1
 Time Multiplier: 1                                         Time Adder:       0
 Description:     Cable Damage Curve                        Qty/Ph:           4
 Size:            400                                       Cont. Temp:       90 deg C.
 Material:        Copper                                    Damage Temp:      250 deg C.
 ---------------------------------------------------------------------------------------------
 Device Name:     Q15 250A                                  TCC Name:         tcc34.tcc
 Bus Name:        MAIN AUX SWB- BUS 2                       Bus Voltage:      415.0V
 Function Name:   Phase
 Manufacturer:    TERASAKI
 Description:     TemBreak
 Type:            S250-PE
 AIC Rating:      70kA                                      Fault Duty:       21328.8A
 Frame:           S250PE 415V 250A                          Curve Multiplier: 1
 Time Multiplier: 1                                         Time Adder:       0
 Sensor:          250A
 Plug:
 Setting: 1) Ir                    1.00         (250A)
          2) tR                    5.0
          3) Isd                   5.0          (1250A)
          4) Tsd                   0.1
          5) INST                  14.0         (3500A)
Parameter settings for the Q15 S250PE will be selected as Ir setting will be 1.0 and the selected
Characteristics Curve will be No.4.
-------------------------------------------------------------------------------------------
 Device Name:     Q18 - 400A                                TCC Name:         tcc35.tcc
 Bus Name:        MAIN AUX SWB- BUS 3                       Bus Voltage:      415.0V
 Function Name:   Phase
 Manufacturer:    TERASAKI
 Description:     TemBreak
 Type:            S400-GE
 AIC Rating:      70kA                                      Fault Duty:       18737.0A
 Frame:           S400GE 690V 400A                          Curve Multiplier: 1
```

```
 Time Multiplier: 1                                        Time Adder:       0
 Sensor:          400A
 Plug:
 Setting: 1) Ir                    1.00         (400A)
          2) tR                    5.0
          3) Isd                   5.0          (2000A)
          4) Tsd                   0.1
          5) INST                  14.0         (5600A)
 Parameter settings for the Q18 S400GE will be selected as Ir setting will be 1.0 and the selected
Characteristics Curve will be No.4.
 ---------------------------------------------------------------------------------------------
 Device Name:     Q19 - 250A                               TCC Name:         tcc35.tcc
 Bus Name:        MAIN AUX SWB- BUS 3                      Bus Voltage:      415.0V
 Function Name:   Phase
 Manufacturer:    TERASAKI
 Description:     TemBreak
 Type:            S250-PE
 AIC Rating:      70kA                                     Fault Duty:       18737.0A
 Frame:           S250PE 415V 250A                         Curve Multiplier: 1
 Time Multiplier: 1                                        Time Adder:       0
 Sensor:          250A
 Plug:
 Setting: 1) Ir                    1.00         (250A)
          2) tR                    5.0
          3) Isd                   5.0          (1250A)
          4) Tsd                   0.1
          5) INST                  14.0         (3500A)
 Parameter settings for the Q15 S250PE will be selected as Ir setting will be 1.0 and the selected
Characteristics Curve will be No.4.

 ---------------------------------------------------------------------------------------------
 Device Name:     Q5 - 1250A                               TCC Name:         tcc35.tcc
 Bus Name:        MAIN AUX SWB- BUS 3                      Bus Voltage:      415.0V
 Function Name:   Phase
 Manufacturer:    TERASAKI
 Description:     AGR-11L-PG
 Type:            AR212S_AGR-11L-PG, In= 800A
 AIC Rating:      65kA                                     Fault Duty:       18737.0A
 Frame:           AR212S 415V 1250A                        Curve Multiplier: 1
 Time Multiplier: 1                                        Time Adder:       0
 Sensor:          1250A
 Plug:            1250A
 Setting: 1) Ir (LTPU)             0.8          (1000A)
          2) t r (LTD) @ 6 x IR    10
          3) Isd (STPU)            6            (7500A)
          4) t sd (STD)            0.05        I^2 t In
          5) Ii (INST)             14.0         (17500A)
-----------------------------------------------------------------------------------------------
```

3 ARC FLASH EVALUATION AND PPE SELECTION

Electrical arc burns account for a large percentage of electrical injuries. An arc flash study combines short circuit calculations, empirical equations and protective device operating times to estimate incident energy and protective clothing requirements at typical working distances.

Causes of Electrical Arc Flash Events:

- Contact with live parts typically from dropping tools or loose parts.
- Insulation failure
- Over-voltages
- Dust
- Corrosion
- Condensation

Why Perform Arc Flash Studies?

- Prevent worker injury or death
- Avoid litigation expense
- Minimize equipment damage
- Minimize system down time
- Comply with codes and safety regulations of AS4836, NFPA 70E, IEC 61482 and IEEE 1584; (OSHA, NFPA, NEC).
- Insurance requirements

Arc Flash Studies estimate incident energy exposure from potential arc sources. The PTW Arc Flash Study, herein referred to as Arc Flash, follows the IEEE 1584 2002 methods for determining the arc-flash hazard distance and the incident energy that workers may be exposed to when working on or near electrical equipment.

The following Arc Flash Evaluation Study has been carried out to provide PPE Requirements for the Luggage Point STP - new 415V Auxiliaries Switchboard.

Bus Name	Protective Device Name	Bus kV	Bus Bolted Fault (kA)	Bus Arcing Fault (kA)	Prot Dev Bolted Fault (kA)	Prot Dev Arcing Fault (kA)	Trip/ Delay Time (sec.)	Breaker Opening Time/Tol (sec.)	Ground	Equip Type	Gap (mm)	Arc Flash Boundary (mm)	Working Distance (mm)	Incident Energy (J/cm2)	PPE Level	Label #	Cable Length From Trip Device (m)
415V MAIN AUX. SWBD	Q1, Q3 & Q5 - 1250A	0.415	21.33	9.39	18.70	8.23	0.277	0.000	Yes	PNL	25	1450	457	7.9	Category 2	# 0041	
Category 1: Arc-rated FR Shirt & Pants	5.00 - 16.74 J/cm^2																
Category 2: Arc-rated FR Shirt & Pants	16.74 - 33.47 J/cm^2																
Category 3: Arc-rated FR Shirt & Pants & Arc Flash Suit	33.47 - 104.60 J/cm^2																
Category 4: Arc-rated FR Shirt & Pants & Arc Flash Suit	104.60 - 167.36 J/cm^2																
Category Dangerous!: No FR Category Found	167.36 - 999.00 J/cm^2														NFPA 70E 2012 Annex D.7 - IEEE 1584 Bus Report (80% Cleared Fault Threshold, include Ind. Motors for 5.0 Cycles), mis-coordination not checked		

Figure 10 – Arc Flash Calculation & PPE Description Table

The highest PPE Level on this switchboard is level 2 at the Main Switch. The following label is recommended to be shown on the switchboard front door for PPE Requirements:

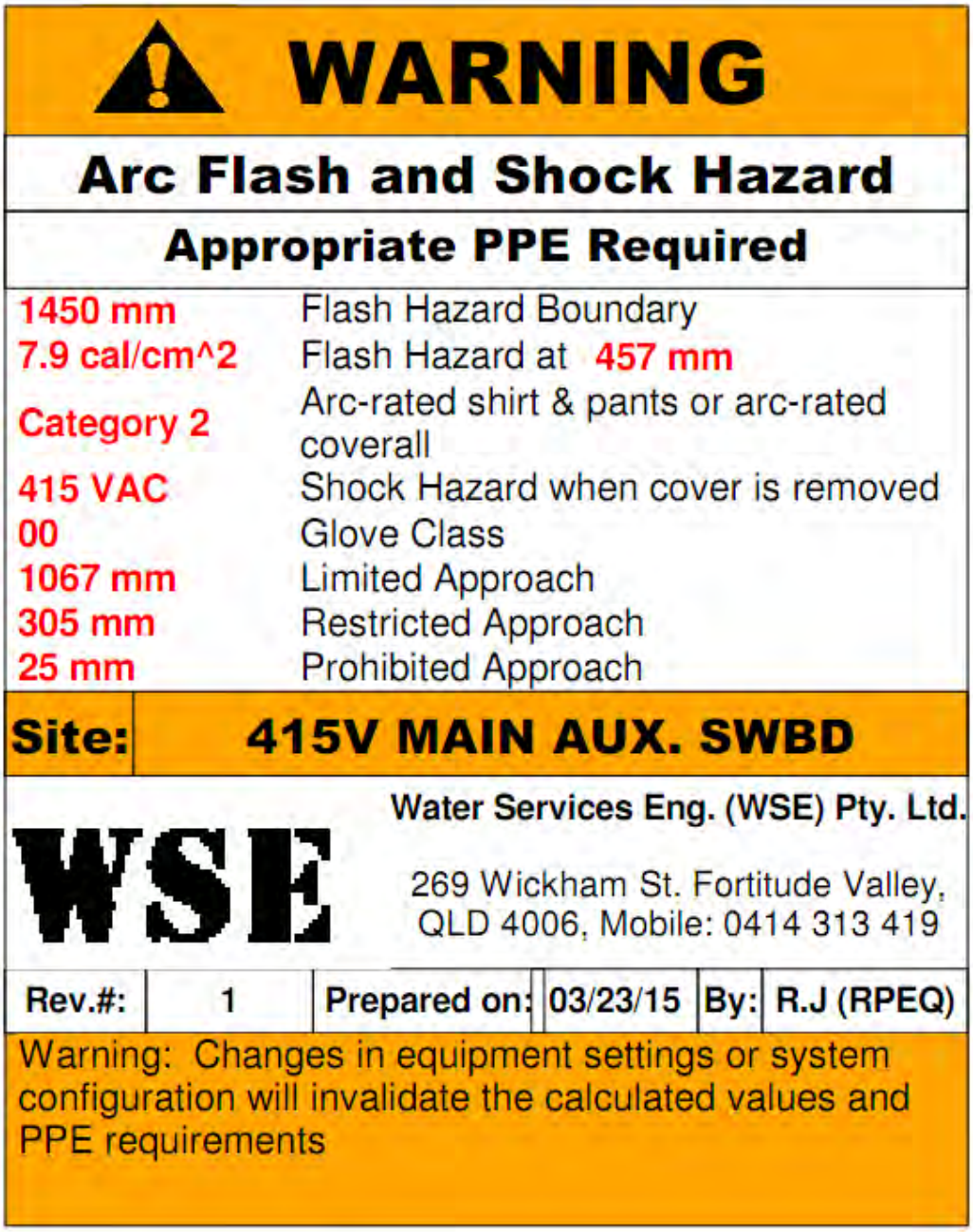

WARNING

Arc Flash and Shock Hazard

Appropriate PPE Required

1450 mm	Flash Hazard Boundary
7.9 cal/cm^2	Flash Hazard at 457 mm
Category 2	Arc-rated shirt & pants or arc-rated coverall
415 VAC	Shock Hazard when cover is removed
00	Glove Class
1067 mm	Limited Approach
305 mm	Restricted Approach
25 mm	Prohibited Approach

Site: 415V MAIN AUX. SWBD

WSE

Water Services Eng. (WSE) Pty. Ltd.

269 Wickham St. Fortitude Valley, QLD 4006, Mobile: 0414 313 419

Rev.#:	1	Prepared on:	03/23/15	By:	R.J (RPEQ)

Warning: Changes in equipment settings or system configuration will invalidate the calculated values and PPE requirements

Figure 11: Recommended Label

Questions and Answers on Arc Flash Hazard:

Q1 - We need to know the hazard distances with the switchboard door closed i.e. no exposure to live parts?

Response: with the switchboard doors closed, there is no arc flash hazard on a Level 0 switchboard, the only hazard is touch potential hazard due to 415V being inside cabinet that could end up with a phase to frame short circuit (for whatever reason). This needs to be addressed by having correct CB settings to ensure prospective touch voltage does not rise beyond dangerous levels (Figure B4 of AS3000:2007) AND must be addressed by putting a warning sign on each switchboard as per signage requirements of Australian Standard AS3000. QUU must ensure this warning sign: **"WARNING 415V DANGEROUS VOLTAGE BEHIND SWITCHBOARD DOOR"** is clearly shown on each switchboard door where 415V is behind that door.

It is recommended to stick the "Arc Flash Hazard" label on the Escutcheon Plate of every compartment that has 415V live part behind. The label should be behind the switchboard front door to avoid any safety concern to the general public.

Q2 - QUU needs sufficient detail to allow communication to their maintenance staff. At the end of the day we need to understand if the arc flash presents a hazard to people walking past the switchboard with the door closed (i.e. general public), QUU staff with limited access (door open and starting a pump) and QUU staff with full access (i.e. electricians – door open and escutcheon open).

Response:

1. On a Level 0 switchboard <u>with doors closed</u>, Arc Flash does not present any hazard to public walking past the switchboard nor QUU staff.
2. For QUU staff with limited access (who have done switchboard key access training), they can open the front door to start a pump without any need to PPE, however it is recommended to put a fence, barrier or mobile barricade around the switchboard (outside the Limited Approach boundary) to prevent general public having access to a switchboard with its front doors open. QUU Staff with limited access MUST NOT open the escutcheon to get access to exposed live 415V parts of the switchboard.
3. Escutcheon plates can only be opened by trained electricians using proper PPE as shown on the Arc Flash Hazard Label (Refer to Restricted Approach description).
4.

Q3 - Can it be said that the "Limited Approach" distance is the minimum distance where the workers mobile barricades should go when working on these switchboards in publicly accessible places i.e. to prevent unqualified people from entering this zone when the switchboard door is open.

Response:

5. Yes as per item b) in Question 2 – it is strongly recommended to put these barricades outside Limited Approach Boundary before opening the switchboard front doors.

Description of Arc Flash Terminologies as per: *NFPA 70E - Standard for Electrical Safety in the Workplace*

Item	Description
Flash Hazard Boundary	The distance from an arcing fault within which unprotected skin could receive a 2nd degree burn. Generally considered the distance from an **exposed arc source** where the incident energy equals 1.2 cal/cm2.
Flash Hazard/ Incident Energy	The amount of energy on a surface at a specific distance from a flash
PPE Category	Indicates the Personal Protective Equipment (PPE) required to prevent an incurable burn at the working distance from an **exposed arc source** during an arcing fault.
PPE Category Level (x)	The following table shows the Category Levels:
	Level 0: Nonmelting, Flammable Materials with Weight >= 4.5 oz/sqyd, Safety Glasses or Goggles + Ear Canal Inserts, Leather Gloves, Safety glasses, Non-melting or untreated natural fiber (cotton/wool/rayon/silk > 4.5 oz/sqyd), shirt (long-sleeve), pants (long)., > 50V voltage rated tools + Class 0 (minimum) gloves, Dielectric shoes or insulating mat (step and touch potential).
	Level 1: Arc-rated FR Shirt & Pants, Hardhat + Safety Glasses or Goggles + Ear Canal Inserts, Leather Gloves, Leather work shoes, Safety glasses, electrically rated hard hat with hood and face shield., 17 J/sq cm, FR shirt (long-sleeve) plus FR pants (long), or FR coverall, rainwear as needed., > 50V voltage rated tools + Class 0 (minimum) gloves and leather protectors (flash) as needed., Leather shoes (flash) as needed. Dielectric shoes or insulating mat (step and touch potential).
	Level 2: Arc-rated FR Shirt & Pants, Hardhat + Safety Glasses or Goggles + Ear Canal Inserts, Leather Gloves, Leather work shoes, Safety glasses, electrically rated hard hat with hood and face shield. Hearing protection., 34 J/sq cm, cotton underwear T-shirt and briefs or shorts, FR shirt (long-sleeve) plus FR pants (long), or FR coverall/coat, rainwear as needed., > 50V voltage rated tools + Class 0 (minimum) gloves and leather protectors (flash)., Leather shoes (flash) as needed. Dielectric shoes or insulating mat (step and touch potential).
	Level 3: Arc-rated FR Shirt & Pants & Arc Flash Suit, Hardhat + FR hard hat liner + Safety Glasses or Goggles + Ear Canal Inserts, Arc-rated Gloves, Leather work shoes, Safety glasses, electrically rated hard hat with hood and face shield. Hearing protection., 105 J/sq cm, cotton underwear T-shirt and briefs or shorts, FR shirt (long-sleeve) plus FR pants (long), or FR coverall/coat, rainwear as needed., > 50V voltage rated tools + Class 0 (minimum) gloves and leather protectors (flash)., Leather shoes (flash) as needed. Dielectric shoes or insulating mat (step and touch potential).
	Level 4: Arc-rated FR Shirt & Pants & Arc Flash Suit, Hardhat + FR hard hat liner + Safety Glasses or Goggles + Ear Canal Inserts, Arc-rated Gloves, Leather work shoes, Safety glasses, electrically rated hard hat with hood and face shield. Hearing protection., 167 J/sq cm, cotton underwear T-shirt and briefs or shorts, FR shirt (long-sleeve) plus FR pants (long), or FR coverall/coat, rainwear as needed., > 50V voltage rated tools + Class 0 (minimum) gloves and leather protectors (flash)., Leather shoes (flash) as needed. Dielectric shoes or insulating mat (step and touch potential).
	Level Dangerous!: No FR Category Found, Do not work on live!, No FR Category Found, Arc Flash Incident Energy Exceeds the Rating of Category 4 PPE., No FR Category Found
Shock Hazard when cover is removed	Voltage levels which pose potential shock hazard when switchboard door and escutcheon are open. Typically 415VAC.
Glove Class	Glove Class is system voltage dependant as follows: Glove Class Voltage

	00 500 V 0 1000 V 1 7500 V 2 17,000 V 3 26,500 V 4 36,000 V For a 415V system, the recommended Glove Class is 0 in *NFPA 70E - Standard for Electrical Safety in the Workplace*
Limited Approach	An approach limit at a distance from an exposed live part within which a shock hazard exists (Defined in NFPA 70E - Standard for Electrical Safety in the Workplace based on design voltage at the fault location).
Restricted Approach	A shock protection boundary to be crossed by only qualified persons (at a distance from a live exposed part) which, due to its proximity to a shock hazard, requires the use of shock protection techniques and equipment when crossed (Defined in NFPA 70E - Standard for Electrical Safety in the Workplace based on design voltage at the fault location).
Prohibited Approach	An approach limit at a distance from an exposed live part within which work is considered the same as making contact with the live part. Defined in NFPA 70E - Standard for Electrical Safety in the Workplace based on design voltage at the fault location.

TRIVANTAGE

Inspection and Test Check List (ITC 003)

Project Title	LUGGAGE POINT SEWAGE TREATMENT PLANT
Project Number	43402596
Switchboard Title	MAIN AUXILIARY SWITCHBOARD

Drawing Number			Revision
Test equipment	MODEL	SERIAL	
Megger	KYORITSU	5132742	
HI POT	KYORITSU	W0296787	
MULTIMETER	FLUKE	15622069	

(For Check List - Tick (✓) acceptable items only, note deviations under "REMARKS". If not applicable mark as N/A)

"This check list is to be used in conjunction with the correct construct schematic / wiring diagrams"

Item	Activity Description	Hold Points	Checked	By (Initial)
	In Process Sheet Metal Check (To be done when sheet metal received at Workshop)			
1	Correct colour as per General Arrangement Drawing		(✓)	
2	Paint Quality		(✓)	
3	Sheet metal complete		(✓)	
4	General Arrangement in accordance with Drawing		(✓)	
5	Outdoor boards to have door stay fitted		(✓)	
6	Schedule card holders fitted inside doors as required		(N/A	
	In Process Busbars check			
7	Supports at correct centres as per drawing		(✓)	
8	Copper size as per drawing		(✓)	
9	Bus bars torque and marked as per procedure		(✓)	
			( )	
	In Process Components check			
10	Check parts as per Equipment List		(✓)	
			( )	
			( )	

Remarks/Remedial Action Required Hold Points:

Remedial Actions Completed ☐ **Signature:** ..... Date :

Inspection and Test Check List (ITC 003)

(For Check List - Tick ( ) acceptable items only, note deviations under "REMARKS". If not applicable mark as N/A)

"This check list is to be used in conjunction with the correct construct schematic / wiring diagrams"

Item	Activity Description	Hold Points	Checked	By (Initial)
	Busbar			
			( )	J.S
1	Correct phase identification		(✓)	
2	All electrical clearances have been met		(✓)	
3	Correct busbar support material has been used and edges sealed with varnish.		N/A	
			( )	
4	Correct tensioning at all joins & terminations and witnessed marked.		(✓)	
5	Correct hole format in joining cubicle		(✓)	
6	Sufficient clearances for terminating cable		(✓)	
7	Busbar is insulated at supports when required,		(✓)	
8	Neutral bar numbered to correspond with active circuits		(✓)	
	Cables			
9	Correct size for demand of circuit & installation method		(✓)	J.S
10	Correct phase colouring		(✓)	
11	Correct termination & insulated		(✓)	
12	Correct numbering		(✓)	
13	Correctly formed and neat		(✓)	
14	Correctly supported		(✓)	
15	All cable entry holes are insulated		(✓)	
16	All cable ties are neatly trimmed		(✓)	
17	All cable clear from busbar's		(✓)	
18	Check all analog inputs and outputs are shielded		(✓)	
19	All shielded cables have been earthed at one end		(✓)	
20	Unprotected cables (line side of fuses) to be in SDI cable		(✓)	

Remarks/Remedial Action Required Hold Points:

Remedial Actions Completed ☐ **Signature:** ..... Date:

TRIVANTAGE

Inspection and Test Check List (ITC 003)

"This check list is to be used in conjunction with the correct construct schematic / wiring diagrams

Circuit Breaker (NOT MCBs) and Switchgear Rating Details (Refer also to NOTE below)

	Reference	Trip Unit Range	Actual Setting	kA rating	CT Ratio + Meter Settings	Checked	By Initial
1	BUS 1 MAIN SWITCH Q1	800-1250	1125A	65	1200/5	(✓)	
2	BUS 2 MAIN SWITCH Q3	800-1250	1125A	65	1200/5	( )	
3	BUS 3 MAIN SWITCH Q5	800-1250	1125A	65	1200/5	( )	
4	DIGESTION AREA MCC Q10	320-800	800A	70		(✓)	
5	SPARE Q11	160-400	400A	70		(✓)	
6	ESS SERVICES No 1 Q12	160-400	400A	70		(✓)	
7	SPARE Q13	100-250	250A	70		(✓)	
8	SITE MSB FEEDER Q14	160-400	400A	70		(✓)	
9	BLOWERS AUX SUPPLY Q15	100-250	250A	70		(✓)	
10	ESS SERVICES No 2 Q16	160-400	400A	70		(✓)	
11	SPARE Q17	160-400	400A	70		(✓)	
12	COGEN MCC Q18	160-400	400A	70		(✓)	
13	MCP1+A1 Q19	50-125	125A	70		(✓)	
14	SPARE Q20	160-400	160	70		(✓)	
15	MCP2+A2 Q21	50-125	125	70		(✓)	
16	BUS TIE 1 Q2					( )	
17	BUS TIE 2 Q4					( )	
18						( )	
19						( )	
20						( )	
21						( )	
22						( )	
23						( )	
24						( )	
25						( )	
26						( )	
27						( )	
28						( )	
29						( )	
30						( )	
31						( )	
32						( )	
33						( )	
34						( )	

Remarks/Remedial Action Required **(NOTE: Photos to be taken of Meter Settings and MCCB & ACB trip units. Each photo to be labeled)**

Remedial Actions Completed ☐ **Signature:** ..... Date:

Inspection and Test Check List (ITC 003)

Switch Board and Control Panels Construction Check List				
Item	**Activity Description**	**Hold Points**	**Checked**	**By (Initial)**
	Labels			
1	All equipment labelled as per drawings		(✓)	3.5
2	Labels fixed as per Construction Notes		(✓)	
3	Safety Services labels RED background		( )	
4	Danger labels fitted as required		( )	
5	Fuse ratings on labels		(N/A)	
6	Compliance Label to AS 3439			
	Earthing			
7	Main earth bar is as per the drawings		(✓)	J.S
8	All doors with equipment are earthed		(✓)	
9	Removable plates, brackets etc. are earthed where required		(✓)	
10	Current Transformer secondary is earthed		(✓)	
11	Earth wiring where looped cannot be broken by removal of a component		(✓)	
12	MEN link fitted as per the drawings & labelled		( )	
13	All earth termination points are accessible and visible. Also are not likely to be covered by any incoming or outgoing cables.		(✓)	
	Supply Authority Section			
14	Check supply authority main isolator lockable in the ON and OFF position		( )	
15	Check all doors and covers before the CTs. or meters are lockable or sealed		( )	
16	Check where the neutral link is located for the site connection if meters are remotely mounted		( )	
17	Check where the earth link is located for the site connection if meters are remotely mounted		( )	
18	Check double insulated cable for POTENTIAL fuses are less than 500 mm		( )	
19	Check double insulated cables are taken from the line side of CTs		( )	
20	Check Direct Connected meter wiring is in building wire and correct size		( )	
21	Check if CT meter wiring is in steel conduit when closer than 100mm to other conductors		( )	
22	For outdoor boards, check metering ct door is padlockable		( )	
23	Check all metering complies with State Regulations			

Remarks/Remedial Action Required:

Remedial Actions Completed ☐ **Signature:** ..... Date:

Inspection and Test Check List (ITC 003)

Switch Board and Control Panels Construction Check List				
Item	**Activity Description**	**Hold Points**	**Checked**	**By (Initial)**
	Functional Test			
1	Point to point test on all cables as per schematic and single line drawings		(✓)	J.S
2	Check all CTs are not open circuit		(✓)	
	Prior to connection of supply all inspection and test check lists must be completed			
	Connect supply (personal protection equipment must be used)			
3	Check phase rotation and continuity		(✓)	J.S
4	Check functional operation of switchboard following specific construction issue drawings		(✓)	
5	Simulated function test including injections or special testing as required by specification		(✓)	
	Final delivery check list			
6	Check all "Remark/Remedial Action Required" items are complete		(✓)	J.S
7	Check if heat shrinks is supplied when necessary		(✓)	
8	Check all load side termination bolts are supplied		(✓)	
9	Check if MEN link is mounted after testing		(✓)	
10	Fish plates + nuts & bolts supplied for Joins		( )	
11	Doors keys provided		(✓)	
10	Photos have been taken of every section and added to job file.		(✓)	
11	As Built marked up drawings are given to Project Manager		(✓)	
12	As built marked up drawings copies placed in switchboard		(✓)	
13	All sections cleaned		(✓)	
14	Test reports have been scanned added to job file			

Remarks/Remedial Action Required:

Remedial Actions Completed ☐ **Signature:** ..... Date:

Inspection and Test Check List (ITC 003)

Switch Board and Control Panels Construction Test Certificate			
AS 3439 CLAUSE	TEST DESCRIPTION	CARRIED OUT BY (SIGN)	DATE
8.3.1	Inspection of the assembly		
8.3.2.1 8.3.2.2(a)	Dielectric Test		
8.3.3	Checking of protective measures and of the electrical continuity of the protective circuits.		
8.3.4	Verification of the Insulation resistance		
AS3000 CL 8.3.5	Earth Continuity test		

INSULATION RESISTANCE TEST (BEFORE HI-POT TEST)

ALL POWER SWITCHES ON	VOLTS	ACCEPTANCE CRITERIA	MEASURED (MΩ)
R – (W+B+N+E)	1000V dc	Greater than 1MΩ	>400MΩ
W – (R+B+N+E)	1000V dc		>400MΩ
B - (R+W+N+E)	1000V dc		>400MΩ
N – (E)	1000V dc		>400MΩ

HIGH POT TEST FOR DURATION OF 1 SECOND

		LEAKAGE mA	RESULT (No puncture or flashover)
R – (W+B+N+E)	2500V ac		1.91GΩ
W – (R+B+N+E)	2500V ac		1.72GΩ
B - (R+W+N+E)	2500V ac		2.01GΩ
N – (E)	2500V ac		OL

INSULATION RESISTANCE TEST (AFTER HI-POT TEST)

ALL POWER SWITCHES ON	VOLTS	ACCEPTANCE CRITERIA	MEASURED (MΩ)
R – (W+B+N+E)	1000V dc	Greater than 1MΩ	>400MΩ
W – (R+B+N+E)	1000V dc		>400MΩ
B - (R+W+N+E)	1000V dc		>400MΩ
N – (E)	1000V dc		>400MΩ

EARTH CONTINUITY TEST

	ACCEPTANCE CRITERIA	
First remove the MEN link. Earth continuity test between any conductive part of the switchboard body, equipment plate, bracket etc. and the Earth bar.	Not greater than 0.5Ω	<0.2Ω

Tested By: JIMMY RANDHIR SINGH		
Signature:	**Witnessed By:** NRAL FATTARELLY	
127395	**Signature:**	**Date:** 10/3/15

All the above signatories certify that the Electrical switchboard work listed has been checked and tested in accordance with the prescribed procedure and that such work complies in every respect with the requirements of the Electricity Act 2002, AS3000 2007 and AS3008.1 1998

Project Manager OK to dispatch	**Signature:**	**Date:**

5. COMPLIANCE CERTIFICATES

SJ ELECTRIC QUEENSLAND

SJ Electric Group (Qld) Pty Ltd
A Division of the Trivantage Group
19 Elliot Street, Albion QLD 4010
P 07 3256 1522 F 07 3256 1533 E mail.qld@sjelectric.com.au
ABN 45 124 414 768 REC 73286 QBSA No. 1265641
www.trivantage.com.au

CERTIFICATE OF:
(Please mark relevant check-box)

X **TESTING AND COMPLIANCE** (Electrical Installations)
Issued in accordance with s227 of the Electrical Safety Regulation 2013

X **TESTING AND SAFETY** (Electrical Equipment)
Issued in accordance with s26 of the Electrical Safety Regulation 2013

*Work performed for:

Customer: Queensland Urban Utilities
(Company Name)

Address: Level 2, 15 Green Square Close
(Street)

Fortitude Valley *(Suburb/town)* Qld *(State)* 4006 *(Postcode)*

*Electrical installation / equipment tested *(please include site address for electrical installation work if different from above):*

Work carried out on Main Auxiliary Switchboard, Luggage Point STP
Installation tested as per Drawings 486/5/5-0275-100 to 486/5/5-0275-121

*Date of test 17 / April / 2015 *Electrical contractor licence number: 73286

Name on contractor licence: SJ Electric Group (Qld) Pty Ltd

Electrical contractor phone number: 07 3256 1522

For **electrical installations,** this certifies that the electrical installation, to the extent it is affected by the electrical work, has been tested to ensure that it is electrically safe and is in accordance with the requirements of the wiring rules and any other standard applying under the Electrical Safety Regulation 2013 to the electrical installation.

For **electrical equipment,** this certifies that the electrical equipment, to the extent it is affected by the electrical work, is electrically safe.

Name: Andy Walmsley
(Person who performed, or person who is responsible for the electrical work)

Signature: Date: 29 / 4 / 15

Indicates a mandatory field