Australia Trade Coast Sewer Project

Serpentine Road Odour Control System

OPERATIONS AND MAINTENANCE MANUAL

Revision A, April 2005

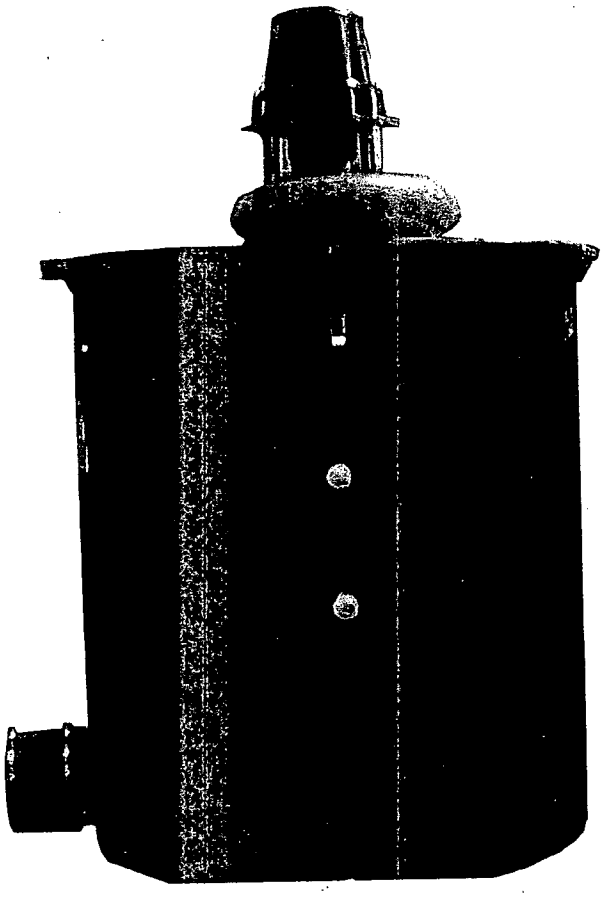

nt:
ghton Contractors Pty Ltd.

igner:
IREPURE Aust. Pty. Ltd.
O BOX 747
ulgrave VIC. 3170

SCSQ

MEDIA SAMPLE TRANSMITTAL

Unit Name Plate

PURAFIL®

First...in clean air

*S.O. No. ☐☐☐☐

Serial No. ☐☐☐ – ☐☐☐☐

Unit Type: _____

This information must be completed in order to process sample(s).

*Equipment Manufacturer if other than PURAFIL, INC.: _____

IMPORTANT NOTES

Prior to analyzing your samples for percent life remaining, we require that the sample transmittal form be filled out accurately and completely. Please make any necessary changes on this sample transmittal form. Use a separate transmittal form for each unit identified by serial number. Up to three beds of media can be sampled and submitted with each form.

From:

_____

_____

_____

_____

Send Certificate of Analysis to:

_____

_____

_____

_____

Phone: _ _ _ - _ _ _ - _ _ _ _
(must be included)

Attn: _____
(must be included)

Market Class (choose one):

☐ Industrial ☐ Commercial ☐ Wastewater

Market Type (choose one from selected Market Class):

☐ Pulp/Paper Mill
☐ Petrochemical/Chemical Plant
☐ Steel Mill/Foundry
☐ Telecommunications
☐ Other (describe) _____

☐ Office Building
☐ Museum/Library/Archive
☐ Airport
☐ Health Care Facility
☐ Other (describe) _____

☐ Municipal
☐ Industrial
☐ Other (describe) _____

Company Name of Installation: _____

Specific Room/Area Treated: _____

COMPLETE THE FOLLOWING BEFORE RETURNING TO PURAFIL, INC.

TODAY'S DATE: _____

(in direction of airflow --->)	Bed #1	Bed #2	Bed #3
Sample Identification			
Media Name (Trade Name)			
Date Current Media Filled			
Date Media Sample Taken			

Purafil, Inc. / P.O. Box 1188, Norcross, Georgia 30091 / (770) 662-8546 / 2654 Weaver Way, Doraville, Georgia 30340
International: Purafil Europa BV Kerkbuurt 27 - 29, 1511 BB Oostzaan, The Netherlands / 075.684.2486
E-mail: purafil@purafil.com / Internet Web Site: http://www.purafil.com

PURAFIL®
First...in clean air

START-UP CHECKLIST
(Start up responsibilities for Purafil representative)

INSPECTION
The condition of the unit upon arrival is critical to its proper operation. Prior to start-up, inspect the unit carefully, according to the checklist below. Correct any inadequacies before start-up to prevent possible damage or inefficiency.

INSTALLATION
Installation of the unit is the responsibility of the customer and is not included in the sale price of the unit. Purafil, Inc. or our local representative, will install this product on request of the customer for a separate fee.

GENERAL INSPECTION
Complete

- ❒ Inspect foundation to assure adequate support.
- ❒ Inspect clearance. Do not block airflow or access doors or fill chutes.
- ❒ Inspect inlet and outlet duct or louvers for free airflow.
- ❒ Inspect all joints, seals and gaskets for potential by-pass.
- ❒ Inspect all door latches and door gasket for acceptable seal.
- ❒ Check all belts and sheaves if this is a powered unit.
- ❒ Inspect all isolation and motor mounts if furnished with unit.
- ❒ Locate and present OIM literature to customer
- ❒ Survey room for tightness when ISA standards apply.

PARTICULATE FILTRATION
Complete

- ❒ Inspect Pre-filter and Final filter installations for correct airflow.
- ❒ Inspect Pre-filter and Final filter installation for by-pass.

CHEMICAL MEDIA FILTRATION
Complete

- ❒ Inspect chemical media beds for by-pass.
- ❒ Confirm chemical media beds are in correct order by airflow.
- ❒ If **chemical modules** are used, make certain airflow is correct. Point nose of the "V" facing inlet air.
- ❒ If **chemical modules** are used for vertical installation, point nose of "V" up. ("Λ")
- ❒ If **bulk fill unit**, make certain the media bed extends into the fill chute to avoid by-pass.
- ❒ **Initial media sample at start-up.** Using a Purafil sample kit, included with this package, take a sample of the new media and send to Purafil to properly register the equipment. Make certain to fill in all the information requested.
- ❒ **IMPORTANT ! The first (90) day sample is critical.** The first (90) days of operation are critical in determining that the system is operating as designed. Failure to submit a sample at the (90) day operation date may affect the customer's warranty.

PURAFIL®
First...in clean air

START-UP CHECKLIST
(Start up responsibilities for Purafil representative)

DIFFERENTIAL PRESSURE GAUGES
Complete

- ❒ Inspect all tubing and connections for tightness.
- ❒ Inspect face cover of gauge for damage.
- ❒ Inspect static pressure taps and fittings for blockage.
- ❒ Inspect the static taps point directly into the airstream.
- ❒ After start up, record gage readings. (Prefilter _____, Final Filter _____)
- ❒ Set pressure flag to determine when filters are to be replaced.

ELECTRICAL INSPECTION (If required)
Complete

- ❒ Inspect electrical connections and contacts if applicable.
- ❒ Test motor starter if applicable
- ❒ Test wheel direction for proper airflow
- ❒ Verify motor voltage supplied agrees with voltage furnished at site.

IMPORTANT! This system was specifically designed to remove gas phase contaminants from the air stream for the protection of people, sensitive electronics or treasures maintained in Museums/Archives. As part of this complete system, Purafil, Inc. agrees to furnish a continuing media life analysis program to the customer direct from Purafil labs at "no additional charge" for as long as Purafil chemical media is used as an integral part of this system. Please contact your local authorized Purafil representative or contact Purafil, Inc. at 1 - 800 - 222 - 6367 or e-mail us at life_analysis@purafil.com or fax us at: (770) 263-6922 for assistance.

Customer's Representative

Signed: _____
Name (printed): _____
Company: _____
Date: _____
Phone: _____
E Mail: _____
Comments: _____

Purafil's Representative

Signed: _____
Name (printed): _____
Company: _____
Date: _____
Phone: _____
E Mail: _____
Comments: _____

Contractor's Representative (if applicable)

Signed: _____
Name (Printed): _____
Company: _____
Job Superintendent _____
Phone: _____
E Mail # _____
Comments: _____

Unit Information

Model # _____
Serial # _____
Media Bed # 1 _____
Media Bed # 2 _____
Media Bed # 3 _____
Media Bed # 4 _____
Comments: _____

PURAFIL
First in clean air

Letter of Instruction for Proper Equipment Start Up

Congratulations on the purchase of your new Purafil gas phase filtration equipment. We thank you for your valuable business. All the necessary documentation for a proper and successful equipment start up is included with this envelope.

You will find:

- Start up check list
- Detailed procedure on media sampling
- Equipment registration media sample bags
- 90 day media sample bags
- Sample Media Life Analysis Report

The start up check list is to be completed by your Purafil representative. If you do not know your Purafil representative, please feel free to contact Purafil at 1-800-222-6367 or email to life_analysis@purafil.com or fax to 1-770-263-6922.

As part of the check list, an initial media sample needs to be taken. The first sample registers your equipment in the Purafil media life analysis database. Once registered, you will be eligible for no-charge Purafil media life analysis for the life of the equipment. This will also help familiarize you with the proper method of sampling media.

90 days after start up of the equipment, a second media sample must be taken. Once received in the Purafil laboratories in Atlanta, Georgia, they will be analyzed for remaining life and a projection of media replacement will be made. This will all be summarized on a media life analysis report and given to you as soon as the analysis has been completed.

If at any time you have questions regarding the function of the equipment, the procedures for media life analysis, or results of the media life analysis, please feel free to contact your local Purafil representative or Purafil direct.

If the equipment is properly maintained and media life analysis is performed on a regular basis (every 90 days), the equipment will function without fail and the quality of the air will be at its best.

Again, we thank you for your business and wait to serve you in any way possible.

Sincerely,

Purafil, Inc.

PURAFIL
First...in clean air

MEDIA LIFE ANALYSIS SAMPLING KIT

With this Media Life Analysis Sampling Kit, you should have received the following:

- Media Sample Transmittal Form
- (3) Media Sample Bags with Labels
- Padded Envelope with Return Label
- Sampling Instructions (found on this form)

This Media Life Analysis Sampling Kit should be used to sample only one PURAFIL dry scrubbing system. For example, if you have a two pass system, only two sample bags should be returned, one for each pass. Discard the third bag. Copy the information found on the Unit Name Plate onto the Media Sample Transmittal Form and the Media Sample Bags. Complete the rest of the Transmittal Form accurately and completely.

A Certificate of Analysis will be mailed to the person indicated on the Sample Transmittal Form. Another sampling kit will be sent to the person listed in the "From" section.

SAMPLING PROCEDURE:

For Modules: Remove one PURAFIL module from near the center of the filter bank to be tested. Pour about 1/3 to1/2 of the contents of the module into a box and fill the sample bag with pellets. Refill the module, adding a little new media, if necessary, and replace in the system.

For Bulk Fill: Using the last three (3) inches of each twelve (12) inch bed, insert the sample probe halfway down into the bed for samples. Continue this procedure until the sample bag is filled.

Mark the bag with the following information from the Unit Name Plate: S.O. No.; Serial No.; and Unit Type. Also, indicate which bed or pass this media is from, #1, #2, or #3.

Return the completed Media Sample Transmittal Form and filled Media Sample Bags in the padded envelope provided to:

Purafil, Inc.
Attn: Media Lab
2654 Weaver Way
Doraville, Georgia 30340
USA

SAMPLE

MEDIA CERTIFICATE OF ANALYSIS FOR B98-1156

04/23/01

Send to:

S.O. No.: 0234 (NA)
Serial No.: B98-1156
Unit Type: IPSA608-64/2P-18M-18M-5F
Market Class: Not Indicated
Market Type: Not Indicated
Co. Name:
Room/Area: Not Given
Date Rec'd: 04/12/01

Results/Projections

	Bed 1	Bed 2	Bed 3
Media Type:	Puracarb	Purafil	
Lab Number:	04201-06	04201-47	
Sample ID:	HVA-01	HVA-02	
Date Filled:	06/15/99	06/15/99	
Date Sampled:	04/05/01	04/05/01	
Time in Service:	21.7 months	21.7 months	
Moisture:	9.9%	5.3%	
*Activity:	5.6% capacity	0.9% KMnO4	
+Total Life:	32.5 months	24.8 months	
+Life Remaining:	10.8 months (33%)	3.1 months (13%)	
+Replacement Date:	03/01/02	07/08/01	
Reanalysis Date:	05/22/01	05/22/01	

Dates are reported as Month/Day/Year

Media Life

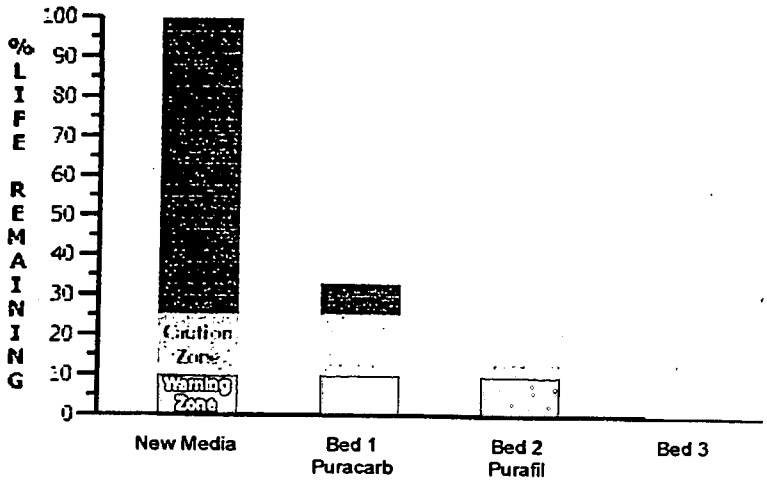

*Puracarb activity relates to H2S capacity, Purakol AM activity relates to NH3 capacity
+Media life and replacement projections are estimates only and are not guaranteed.

Your Rep:

Purafil, Inc. / P.O. Box 1188, Norcross, Georgia 30091 / (800)222-6367 / 2654 Weaver Way, Doraville, Georgia 30340
International: Purafil Europa BV / Kerkbuurt 27-29, 1511 BB Oostzaan, The Netherlands / 075.684.2486
E-mail: purafil@purafil.com / Internet Web Site: http://www.purafil.com

Table of contents

page

1.0 System Overview 3
2.0 Components of Odour Control Systems 4
2.1.1 Odour Control Vessel (Drum) 4
2.1.2 Odour Control Blower 5
2.1.3 Odour Control System Pipe work 5
3.0 Control & Operation 5
3.1 System Control 5
4.0 System Maintenance 6
4.1 Media Sampling & Replacement 7
4.1.1 Media Sampling 7
4.1.2 Media Replacement 7
4.2 Media Disposal 8
4.3 Exhaust Fan Maintenance 8
Appendix A: Purafil Literature DS-1000 9
Appendix B: Drawings 10
Appendix C: Material Safety Data Sheets 11
Appendix D: Manufacturers Information 12

Airepure Australia Pty. Ltd.
ABN 16 085 671 129
www.airepure.com.au

Telephone: +61 1300 886 353 Email: info@airepure.com.au

© Airepure Australia
This document is and shall remain the property of Airepure Australia Pty. Ltd. This document may only be used for the purposes for which is has been commissioned and in accordance with the terms of engagement for the commission.

Unauthorised use of this document, or any part of this document, in whatever form is strictly prohibited.

Document Register

Rev	Status/Comments	Author	Reviewed	Approval		
				Name	Signature	Date
A	Final Draft	J McIntosh	J McIntosh	J McIntosh		4/05

++ Denotes original document signed.

Client Acceptance

Leighton Contractors Pty Ltd.			/ /04

1.0 System Overview

This document provides a general description of the operational and maintenance activities associated with the odour control system installed at Serpentine Road, Pinkenba site comprising the Australia Trade Coast Sewer Project. Drawings and relevant manufacturer's manuals have also been provided in the appendices providing more detailed information in relation to this installation.

The odour control unit at this site is an active type odour control system. This system is designed to clean odorous air using a Purafil ® DS-1000 drum scrubber coupled with a particulate filter, that has an inlet and outlet pipe, mechanical blower (exhaust fan), a media bed housed in a HDPE drum, and diffuser. This drum scrubber is designed to exhaust recycled air. The drum scrubber is supplied with Purafil ® Odoroxidant, Odorcarb II and Odormix media's. A blower (exhaust fan) fitted to the lid, draws the air from the odour control drum. The air is then discharged, to atmosphere, via an outlet duct section fitted to the blower section. The speed of the blower is controlled via a VSD (Variable Speed Drive), which has been supplied for this site.

© Airepure Australia Pty. Ltd.

2.0 Components of Odour Control Systems

The following sections provide an overview of the main components that make up the odour control system.

2.1.1 Odour Control Vessel (Drum)

The main component of the odour control system is the DS-1000 Drum Canister (or Scrubber). Each drum scrubber consists of a polyethylene drum measuring 1,524 mm in height and 1,321 mm in diameter. The drum is fitted with a 254 mm inlet flexible connection. Connection to the inlet is via a 254 mm slip on "FERNCO" connector. The drum is also fitted with two sample ports to allow media samples to be taken and a drain valve is fitted at the base of each drum for maintenance purposed.

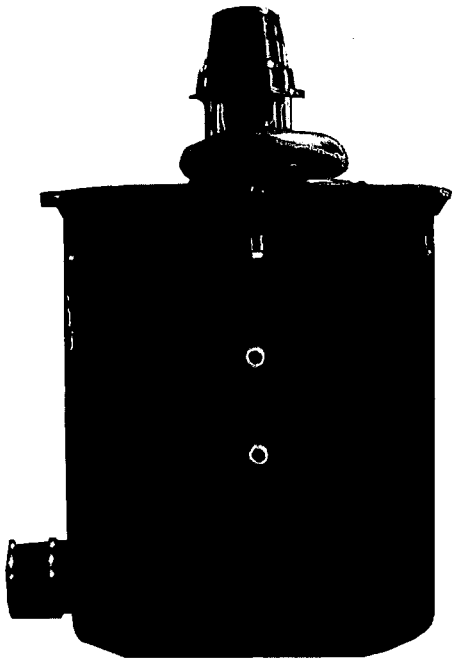

Figure 2.1.1 Odour control system canister.

The vessel is filled with 183 kg's PURAFIL ODOROXIDANT, 431's kg of PURAFIL ODORCARB II ® and 183 kg of PURAFIL ODORMIX SELECT 1/16 ® as well as other various poly-media filters, which are used to contain any media dust that may be generated.

Details of the media are provided in Appendix D in the form of Materials Safety Data Sheets.

The vessel is finished in black Polyethylene.

© Airepure Australia Pty. Ltd.

2.1.2 Odour Control Blower

A mechanical centrifugal blower, fabricated from strong high density polypropylene, is used to draw sewer gases through the media bed of the drum scrubber. The details of the blower for this site are provided in the table below.

Table 2.1.2 - Blower Details

Item	Detail
Impeller type	Centrifugal
Fan type	Niche CAV200, Centrifugal SWSI, Laminar impeller fan
Volume (l/s)	Max. 480 l/sec
Static Pressure (pa)	750
Fan speed (rpm)	2880
Sound Pressure (dBA)	64 @ 3m
Motor Power (kW)	2 Pole, 2.2
Electrical supply	415V, 3 phase, 50Hz

Blower control (speed) is maintained at the required airflow via a Variable Speed Drive, which is installed in a cabinet close to the unit on site.

2.1.3 Odour Control System Pipe work

Interconnecting SWJ (Solvent Weld Joint) ABS pipe work and fittings are used to connect the various components of the proposed odour control system.

A single 250mm ABS run exists from the wet well directly to the odour control unit located above ground level. An isolation damper is fitted within this duct run for purposes of servicing and a method of shut-off to the wet well if required.

3.0 Control & Operation

The following sections provide an overview of the control employed at this site.

3.1 System Control

The odour control system employed at this site is an active (force ventilated) type odour control system comprising a centrifugal blower and VSD drive. Following is the set control system requirements

- The VF Drive will operate continuously.

© Airepure Australia Pty. Ltd.

- The Drive is to receive a 4-20 mA signal from the RTU to control the speed of the blower.
- The VF Drive will provide a digital output to the RTU to indicate drive fault.
- The Drive is to run at a set minimum speed under normal operating conditions. This set speed to be adjustable in software and set during commissioning to achieve the required negative pressure in the wet well. Normal operating conditions are when the wet well level is either constant, falling or rising at a rate less that that specified below.
- The drive will run at an increased speed during periods when the wet well level is rising. The increased speed set point to be adjustable in software and set during commissioning to maintain the required negative pressure in the wet well.
- Sewage Maintenance is to specify the required rate of rise in the wet well to trigger the increased speed operation. In specifying the rate of rise, need to consider the time period between sampling of the wet well level and the required change for each sample. This needs to be averaged to filter out transient changes. NOTE: Such filtering will increase the response time before speed changed will be effected.
- There is to be no instrumentation required to monitor the negative pressure within the system.

4.0 System Maintenance

The following sections provide a guide to the minimum maintenance requirements for this system. Procedures describing the replacement of the media contained within the drum scrubber have also been provided in this section.

Please be aware of the following precautions when handling, or when being exposed to the media contained within the drum.

A well-ventilated work area is recommended for any work that is being performed on this odour control system. Dust occurs in fresh media due to handling abrasion. Workers should avoid direct inhalation of considerable Purafil ® dust, as it induces sneezing. In closed, poorly ventilated areas, the wearing of dust masks, such a 3M No.8500, is strongly recommended.

Avoid exposing the Purfail ® media to water or precipitation, as this dissolves permanganate content. Storage of the media should be in a dry place with less than 95% relative humidity. Exposure of permanganate solution to the skin causes brown staining, which is temporary but not harmful. This staining can be removed by washing in a diluted solution of water and sodium bisulfite.

If dust is exposed to the eyes or delicate membrane, flush thoroughly with water and seek treatment by a physician. Follow normal procedures for exposure to abrasive dust. The wearing of suitable eye protection is also recommended

© Airepure Australia Pty. Ltd.

4.1 Media Sampling & Replacement

Purafil ® media has a finite life which is a function of the available potassium permanganate ($KmnO_4$) expressed as a percentage.

Following start-up and during the operating life of the system, routine sampling of the media contained in the drum scrubber should be undertaken to ensure the working efficiency of the system is kept. Please note that a change in colour does not necessarily represent any change in the effectiveness of the media.

Since every site is different, due to the type and quantity level of the contaminant, operators must develop a sample schedule best suited to their system. It is however recommended that a sample be taken not long after the system has been commissioned so that the rate of delay can be established, and hence a replacement date can be projected, as well as, a recommended sample schedule.

4.1.1 Media Sampling

To take a media sample, simply utilise the media sampling ports located on the outside of the drum and insert the sampling probe into the media bed.

Open the entry port of the sampling probe, pulling up until the port cover slides open.

Close the sampling probe by pushing down and pour the contents into a plastic sample bag, which can be provided by your Airepure representative.

Seal this bag tightly and label the bag appropriately, so that it can be clearly determine from where this sample had been taken. Include the date the sample was taken.

Please note that the local Airepure representative can assist you in the undertaking of lab analysis of this media.

4.1.2 Media Replacement

Following media analysis, in determination of the condition of the media. If then, it has been determined that the media is in need of replacement then the following procedure should be followed:

PLEASE NOTE: The use of eye and dust protection (PPE) should be worn before opening the drum scrubber. It is recommended that overalls and gloves also be worm as some of the materials contained within the drum scrubber canister can leave stains that cannot be removed from clothing.

© Airepure Australia Pty. Ltd.

REMOVAL OF DRUM SCRUBBER CONTENTS

1. Electrical isolate the blower motor and tag "DO NOT OPERATE"
2. Remove drum vessel lid and blower.
3. Remove Polymedia (blue) filter.
4. Remove layer of Odormix media
5. Remove layer of Odorcarb II media.
6. Remove layer of Odoroxidant media.
7. Remove layer of Polymedia (blue) filter.

REPLACEMENT OF DRUM SCRUBBER CONTENTS

1. Install Polymedia (blue) filter
2. Install new Odoroxidant media (2 boxes)
3. Install new Odorcarb media (5 boxes)
4. Install new Odormix media (3 boxes)
5. Install top Polymedia (blue) filter
6. Replace drum vessel lid and blower
7. Return blower motor to service and remove tag.

Please refer to section 4.2 for instructions concerning the proper disposal of the old media.

4.2 Media Disposal

Purafil ® media is a non-toxic, non-flammable substance. Filtration of contaminants through Purafil ® media causes molecular changes to occur, and the resulting product is usually not harmful to the environment. Although special precautions are generally not required when disposing of spent media, government regulations may require specific disposal procedures if the resulting product could be harmful to the environment. Large quantities of Purafil media should not be disposed of in a dumper like equipment because the weight of the media cause difficulties in the handling of the dumpster.

Independent laboratory analysis for the Environmental Protection agency (EPA) toxicity characteristics may be required if the contaminates eliminated from your environment (system) include heavy metals and pesticides.

4.3 Exhaust Fan Maintenance

Routine maintenance procedures, typical of those carried out for electrical motors should be undertaken for the motor of this system. A qualified electrical trades person should only undertake this type of work.

It is recommended that the electrical motor and fan be inspected every 6 months and that routine maintenance procedures be undertaken on a 12 monthly basis.

© Airepure Australia Pty. Ltd.

IMPORTANT: The exhaust fan should be electrically isolated before attempting any routine inspection of maintenance procedures.

The exhaust fan and its associated drive components, should be inspected to ensure continually reliable and safe operation.

© Airepure Australia Pty. Ltd.

Appendix A: Purafil literature DS-1000

No.if applicable	*Description*
	Purafil ESD Drum Scrubber – 1000
	Suggested Specifications – DS-1000
	Purafil ESD's Odorcarb II Media and Specification
	Purafil ESD's Odoroxidant Media and Specification
	Purafil ESD's Odormix Media and Specification
	Service Guide Purafil Drum Scrubber

© Airepure Australia Pty. Ltd.

Purafil ESD Drum Scrubber - 1000

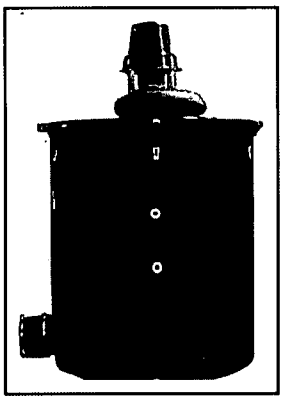

Manufactured by Purafil Environmental Systems Division (ESD), the Drum Scrubber–1000 (DS-1000) is ideal for removal of odorous gases found at pump stations, lift stations, wet wells, force mains, and even at the wastewater treatment plant. Recommended for moderate-load applications, the DS-1000 is sized for airflows up to 1000 cfm.

Construction: The DS-1000's polyethylene canister measures 52 inches (132.1 cm) in diameter, 79.5 inches (201.9 cm) in height (including blower), and 1/4-inch (6.4 mm) in thickness. The unit is mounted on a 60-inch square aluminum skid.

Media: At the core of ESD's high-efficiency odor control systems are dry-chemical air filtration medias. The DS-1000 is bulk filled with multiple layers of Odoroxidant™, Odorcarb™ II, and Odormix™ media for broad-spectrum removal of sewage odors at 99.5+% efficiencies.

Applications

- Pump Stations
- Lift Stations
- Wet Wells
- Force Mains
- Head Works
- Aerobic Digesters
- Clarifiers
- Sludge Dewatering

Targeted Odors/Gases

- Hydrogen sulfide
- Ammonia
- Aldehydes
- Sulfur dioxide
- Mercaptans
- Organic compound

System Advantages

Corrosion-Resistant Housing: The DS-1000 is constructed of corrosion-resistant materials and requires essentially no maintenance, making it ideal for remote, outdoor applications or areas where high levels of acid gases are present.

Low Maintenance: The DS-1000 has only one moving part—a blower. Other than routine service checks, no maintenance is required to ensure maximum scrubber performance. The expected service life of the DS-1000 is nine months to one year, depending on the contaminant level.

Complete Gas Removal: Purafil ESD's Odoroxidant, Odorcarb II, and Odormix media offer broad-spectrum removal of sewage odors. By using these media in combination, users are assured of complete odor control.

Media Sampling Ports: Three media sampling ports, located on the side of the DS-1000, allow for easy access to the media beds. Upon receiving the samples, Purafil ESD's laboratory performs a complimentary Media Life Analysis to project remaining service life. Timely replacement of spent media is critical in preventing odor breakthrough.

Local Service: Purafil ESD's network of local representatives offers convenient and timely service. These factory-trained representatives work in conjunction with ESD's in-house laboratory to provide comprehensive technical service.

Standard Features:

- Linear, low-density, polyethylene canister (¼-inch in thickness)
- Odoroxidant, Odorcarb II, and Odormix media (39 ft^3)
- Integrated motor housing
- Totally Enclosed Fan Cooled (TEFC) motor
- High-density, rotomolded, polypropylene motor/blower assembly
- Adjustable damper (PVC)
- Stainless steel and rubber latches
- Stainless steel fasteners
- Thermoplastic packing and FRP lid
- Polypropylene impellers and motor shaft bushings
- Integrated rainhood
- Fernco flexible coupling at inlet
- Polyethylene inlet (10-inch pipe diameter)
- Airflows up to 1000 cfm

Optional Features

- Other Purafil ESD media

Other System Advantages

- System media are UL Classified Class 1 and 2.
- Spent media is landfill disposable.
- Maintains superior performance in climates with fluctuating temperature and relative humidity.

PURAFIL Environmental Systems Division

2654 Weaver Way • Doraville, Georgia 30340 • Phone: (770) 662-8545 • Fax: (770) 263-6922 • www.purafil.com

SUGGESTED SPECIFICATIONS - DS-1000

DRUM SCRUBBER – 1,000 CFM

For use with drawing AW-121703 Rev. B

PURAFIL Environmental Systems Division

1. GENERAL

1.01 Intent

A. It is the intent of these Suggested Specifications to give the Contractor/Engineer the descriptions of the equipment, instructions for delivers, and installation of the Purafil Drum Scrubber-1,000cfm (DS-1000) as manufactured by Purafil, Inc. Doraville, Georgia or equal.

B. The Contractor/Engineer is advised that all drawings shall be for general reference.

C. The Contractor/Engineer shall provide all equipment and work indicated below unless otherwise noted and any additional work to produce a completely finished job as required by the Engineer.

2. PRODUCTS

2.01 General

A. This specification defines the requirements for a Drum Scrubber-1,000cfm (DS-1000) as manufactured by Purafil, Inc. Doraville, Georgia or equal.

B. The DS-1000 consists of dry scrubbing media contained in a 550-gallon, linear, low density, polyethylene drum with a blower mounted on top of a FRP lid.

C. The DS-1000 shall contain 39 ft^3 (0.96 m^3) of Odoroxidant™, Odorcarb™ II, and Odormix™ media. The DS-1000 shall contain 400 pounds (183 kg) of impregnated activated alumina, Odoroxidant media, 945 pounds (431 kg) of impregnated activated carbon, Odorcarb II Media, followed by 400 pounds (183 kg) of a 50/50 volume blend of activated carbon and active-oxidant impregnated alumina, Odormix Media, as manufactured by Purafil, Inc.

D. The DS-1000 shall be designed to operate at 99.5+% gas removal efficiencies.

E. The airflow capacity shall range from 800 cfm (1,360 m^3/hr) to 1,100 cfm (1,870 m^3/hr)

F. The configuration shall be arranged so that the contaminated air shall flow into the bottom inlet plenum and be drawn upwards through the media bed. Treated air shall discharge out the top of the vessel through a centrifugal air ventilator.

G. All components of the DS-1000 shall include:

1. 550-gallon, linear, low density, polyethylene drum and FRP lid
2. 1,745 pounds (796 kg) of dry scrubbing media
3. Polypropylene blower section with damper

2.02 Drum

A. The drum material shall be linear, low density, polyethylene, 1/4" (6.4mm) in thickness.

B. The drum shall have a capacity of 550 gallons and measure 52" (132.1 cm) in diameter and 60" (152.4 cm) in height.

C. Latches shall be stainless steel and rubber.

D. Fasteners shall be stainless steel.

E. The drum shall contain 39 ft^3 (1.10 m^3) of Odoroxidant, Odorcarb II and Odormix medias as manufactured by Purafil, Inc.

F. The drum shall be provided with two media sampling ports, each measuring one inch in diameter.

G. The media shall be supported by an FRP air diffuser and surrounded by thermoplastic packing and will contain a mist eliminator to remove moisture.

H. Polymedia filters shall be used to separate the thermoplastic packing from the Odorcarb II media, the blower from the Odormix media, and to separate the layers of media.

I. The inlet shall have a 8" (203.2 mm) FERNCO flexible coupling.

J. The drum shall have a 0.75" (19 mm) dia. drain pipe.

2.03 Blower Section

A. The blower shall be sized to deliver 1,000 cfm (1,700 m^3/hr)

B. The blower/motor shall be covered with an FRP rainhood.

C. The blower shall consist of a direct drive motor-fan assembly.

D. The motor shall be a 3.0 hp, 3450 RPM, 115/230 volt / 1 phase/ 60 Hz TEFC motor.

E. The unit comes ready to be field wired.

2.04 Chemical Media

A. The DS-1000 shall contain 8 ft^3 (0.22 m^3) of Odoroxidant media, 21 ft^3 (0.58 m^3) of Odorcarb II Media, and 10 ft^3 (0.28 m^3) Odormix Media as manufactured by Purafil, Inc.

2654 Weaver Way • Doraville,GA 30340 • (Toll-Free) 1-800-222-6367 • (Phone) 770-662-8545 • (Fax) 770-263-6922
Email:purafil@purafil.com • www.purafil.com

B. The Odoroxidant™ Media shall consist of manufactured, generally spherical, porous pellets. Pellets shall be formed from a combination of activated alumina and other binders, suitably impregnated with potassium permanganate to provide optimum adsorption, absorption, and oxidation of a wide variety of gaseous contaminants. The potassium permanganate shall be applied during pellet formation, such that the impregnant is uniformly distributed throughout the pellet volume and is totally available for reaction.

C. Odoroxidant Media shall have the following physical properties:
   1. Moisture content: 35% maximum
   2. Average crush strength: 35% minimum - 70% maximum
   3. Average abrasion: 4.5% maximum
   4. Bulk density: 50 lbs/ft^3 (800 kg/m^3)
   5. Nominal pellet diameter: 1/8" (3.2 mm)
   6. Potassium permanganate content: 8% minimum

D. Odoroxidant Media shall be UL Classified Class 1.

E. Odoroxidant Media shall be capable of absorbing and removing odorous gases throughout the entire pellet.

F. The Odorcarb™ II Media shall consist of manufactured, generally spherical porous pellets. The pellets shall be formed from a combination of powered activated carbon, alumina, and other binders suitably impregnated with chemicals to enhance the capacity for removal of odorous gases. The pellets shall also chemically react to produce solid reaction products within the media. Impregnants shall be applied during pellet formation such that the impregnant is uniformly distributed throughout the pellet volume.

G. Odorcarb II Media shall have the following physical properties:
   1. Moisture content: 35% maximum
   2. Average crush strength: 35% minimum - 70% maximum
   3. Average abrasion: 4.5 maximum
   4. Bulk density: 45 lbs/ft^3 (721 kg/m^3)
   5. Nominal pellet diameter: 1/16" – 1/8" (1.587mm)

H. Odorcarb II Media shall be UL Classified Class 2.

I. Odorcarb II Media shall be capable of absorbing and removing odorous gases throughout the entire pellet.

J. The Odormix™ Media shall consist of an equal mix (by volume) of Odoroxidant Media and Odorkol Media. Odoroxidant Media shall be manufactured of generally spherical, porous pellets formed from a combination of powdered activated alumina and other binders, suitably impregnated with potassium permanganate to provide optimum adsorption, absorption, and oxidation of a wide variety of gaseous contaminants. The potassium permanganate shall be applied during pellet formation, such as the impregnant is uniformly distributed throughout the pellet volume and is totally available for reaction. Odorkol Media shall be a premium grade, activated carbon with a high surface area available for adsorption.

K. Odormix Media shall have the following physical properties:
   1. <u>Odoroxidant Media</u>
      - Moisture content: 35% maximum
      - Average crush strength: 35% minimum - 70% maximum
      - Average abrasion: 4.5% maximum
      - Bulk density: 50 lbs/ft^3 (800 kg/m^3)
      - Nominal pellet diameter: 1/16" (1.587mm)
      - Potassium permanganate content: 8% minimum

   2. <u>Odorkol Media</u>
      - Moisture content: 5.0% maximum
      - CTC: 55 minimum
      - Base material: activated carbon
      - Bulk density: 30-32 lbs/ft^3 (480-512 kg/m^3)
      - Odormix Media shall be UL Classified Class 1.

L. ANALYTICAL SERVICES

a. Media Sampling and Analysis
   i. The manufacturer shall, after start up, shall analyze media samples to predict the remaining service life of system media. Such service will be provided as needed at the manufacturer's expense.

2654 Weaver Way • Doraville,GA 30340 • (Toll-Free) 1-800-222-6367 • (Phone) 770-662-8545 • (Fax) 770-263-6922
Email:purafil@purafil.com • www.purafil.com

M. MANUFACTURER

a. Purafil, Inc.

i. The manufacturer shall have a minimum of ten (10) years experience in the design, fabrication, and testing of systems that are 99.5+% efficient at removing gaseous contaminants.

ii. The manufacturer shall be a single source provider of equipment, media, and testing services and be certified to ISO-9001 standards.

iii. The manufacturer shall have local, factory-trained representatives.

iv. The manufacturer shall be Purafil, Inc. of Doraville, Georgia.

2654 Weaver Way • Doraville,GA 30340 • (Toll-Free) 1-800-222-6367 • (Phone) 770-662-8545 • (Fax) 770-263-6922
Email:purafil@purafil.com • www.purafil.com

Purafil ESD's Odorcarb™ II Media

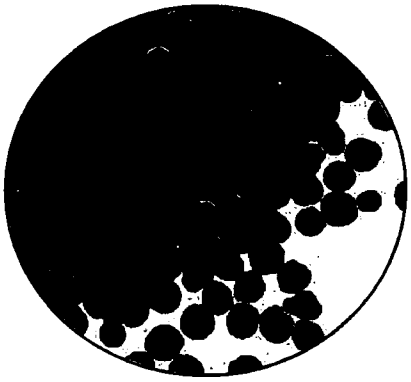

Proven Performance

Odorcarb™ II Media is highly effective at removing odorous hydrogen sulfide gas (H_2S) and is the primary media in Purafil ESD's odor control systems for wastewater treatment applications.

Characteristics

- Landfill disposable
- New and spent media is non-toxic
- UL Classified Class 2

Media

Odorcarb™ II, an activated alumina-based media shall consist of manufactured, generally spherical porous pellets measuring 1/16" to 1/8" in diameter. Pellets shall be formed from a combination of powdered activated carbon, alumina and other binders, suitably impregnated with caustic chemicals to enhance the capacity for removal of hydrogen sulfide.

Impregnants shall be applied during pellet formation, such that the impregnant is uniformly distributed throughout the volume of the pellet.

Disposal Requirements

Spent Odorcarb™ II Media should be disposed of according to local, state and federal guidelines.

The Chemisorptive Process

The chemisorptive process shall remove contaminant gases by means of adsorption, absorption, and chemical reaction. Gases shall be trapped within the pellet where an irreversible chemical reaction changes the gases into harmless solids, eliminating the possibility of desorption.

Removal Capacity

Odorcarb™ II Media shall meet the following removal capacity for hydrogen sulfide: 35.0% minimum by weight.

100 lbs (45.36 kg) of Odorcarb™ II Media shall remove a minimum of 35 lbs (15.88 kg) of hydrogen sulfide.

Physical Properties

Odorcarb™ II Media shall have the following physical properties:

- **Moisture Content:** 35% Max
- **Crush Strength:** 35% - 70% Max
- **Abrasion:** 4.5% Max
- **Bulk Density:** 45 lbs/ft³ (721 kgs/m³)
- **Pellet Diameter:** 1/16" - 1/8" (1.5 mm - 6.5mm)

Applications

Purafil ESD's Odorcarb™ II Media is ideal for use in environments requiring control of hydrogen sulfide gas, such as wastewater treatment plants, pumping stations, wet wells, lift stations and sludge holding tanks.

Application Guidelines

Odorcarb™ II Media shall perform effectively under the following conditions and guidelines:

- **Temperature:** -4°F to 125°F (-20°C to 51°C)
- **Humidity:** 10 - 95% RH
- **Airflow:** Odorcarb™ II Media shall be effective in Purafil ESD systems, including the Drum Scrubber with airflows from 100 to 1,000 CFM (170 to 1699 m³/hr), Tub Scrubber with airflows from 500 to 6,000 CFM (850 to 10,194 m³/hr) and Deep Bed Scrubber with airflows from 600 to 8,000 CFM (1,020 to 13,592 m³/hr). Odorcarb™ II Media shall also be effective in Vessel Scrubbers with airflows from 8,000 to 20,000 cfm (13,592 to 33,980 m³/hr).

Other Media

Purafil ESD's Odorcarb™ II Media can be used with other media manufactured by Purafil, Inc. Specific media are available for selection based upon the composition of the contaminants present, gaseous concentration levels, airflow requirements and environmental concerns. These media include Odoroxidant™, for the removal of sulfur dioxide, hydrogen sulfide, aldehydes and many organic compounds; Odormix™ for broad-spectrum removal of sewerage odors; Odorkol™ for the removal of hydrocarbons; Odorkol™ AM for the removal of ammonia; Chlorosorb® II for the specific gas removal of chlorine; CSO™ for emergency removal of chlorine and sulfur dioxide.

Purafil ESD, Your Single Source For...

- Media Manufacturing
- Equipment Design & Manufacturing
- Complimentary Media Life Analysis
- Monitoring Instruments & Programs

PURAFIL Environmental Systems Division

Purafil, Inc. • 2654 Weaver Way • Doraville, Georgia 30340 • Phone: (770) 662-8545 • Fax: (770) 263-6922 • www.purafil.com

PURAFIL
Environmental Systems Division

Specification: Odorcarb™ II Media

Target Contaminants
- Hydrogen sulfide
- Sulfur dioxide
- Volatile organic compounds

Media Specification
Odorcarb™ II media is manufactured specifically for corrosive environments and consists of generally spherical, porous pellets. Composed of carbon, alumina and other binders, Odorcarb™ II pellets are impregnated during pellet formation such that the impregnant is uniformly distributed throughout the pellet volume and is totally available for reaction.

Chemisorptive Process
The Purafil chemisorptive process shall remove contaminant gases by means of adsorption, absorption, and chemical reaction. Gases shall be trapped within the pellet, where oxidation changes the gases into harmless solids, thus eliminating the possibility of desorption.

Removal Capacity
Odorcarb™ II media shall meet the following removal capacities:

- Hydrogen sulfide: 35% by weight

For example, 100 lbs (45.36 kg) of Odorcarb™ II media will remove a minimum of 35 lbs (15.88 kg) of hydrogen sulfide.

Physical Properties
Odorcarb™ II media shall have the following physical properties:

- Moisture content: 35% maximum
- Crush strength: 35% - 70% maximum
- Abrasion: 4.5% maximum
- Bulk density: 45 lbs/ft^3 (721 kg/m^3)
- Nominal pellet diameter: 1/16" - 1/8" (1.59 mm - 3.175 mm)
- Odorcarb™ II media is UL Classified Class 2

2654 Weaver Way Doraville, Georgia 30340 USA Ph: (770) 662-8545 (800) 222-6367 Fax: (770) 263-6922 www.purafil.com

Application Guidelines
Odorcarb™ II media shall perform effectively under the following conditions and guidelines:

• Temperature: -4° F - 125° F (-20° C - 51° C)

• Humidity: 10% - 95% RH

• Airflow: Odorcarb™ II media shall be effective in commercial and industrial systems with airflows ranging from less than 25 cfm to over 100,000 cfm (42.5 m^3/hr - 169,920 m^3/hr) and with velocities from 60 to 500 fpm (0.30 to 2.54 m/s).

• Media performance: Odorcarb™ II media shall be designed for 99.5% minimum removal efficiency in Purafil systems.

• Media life: Regular media samples of Odorcarb™ II media shall be taken for projecting remaining media life, providing scheduled maintenance, and ensuring performance.

Installation and Disposal Requirements
• Installation: Installers shall use dust masks, safety goggles, and rubber gloves.

• Disposal: Spent Odorcarb™ II media shall be disposed of according to local, state and, federal guidelines.

2654 Weaver Way Doraville, Georgia 30340 USA Ph: (770) 662-8545 (800) 222-6367 Fax: (770) 263-6922 www.purafil.com

Purafil ESD's Odoroxidant™ Media

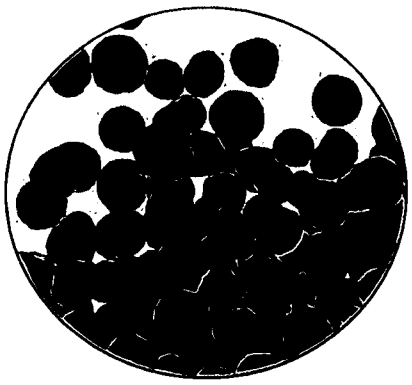

Proven Performance

Odoroxidant™ Media demonstrates a high removal capacity for sewerage gases, including hydrogen sulfide, aldehydes, sulfur dioxide and many organic compounds.

Characteristics

- Landfill disposable
- UL Classified Class 1
- New and spent media is non-toxic
- Will not support bacterial or fungal growth

Media

Purafil ESD's Odoroxidant™ Media shall consist of manufactured, generally spherical, porous pellets. Pellets shall be formed from a combination of activated alumina and other binders, suitably impregnated with potassium permanganate to provide optimum adsorption, absorption and oxidation of a wide variety of gaseous contaminants. The potassium permanganate shall be applied during pellet formation, such that the impregnant is uniformly distributed throughout the pellet volume and is totally available for reaction.

Disposal Requirements

Spent Odoroxidant™ Media should be disposed of according to local, state and federal guidelines.

The Chemisorptive Process

The chemisorptive process shall remove contaminant gases by means of adsorption, absorption, and chemical reaction. Gases shall be trapped within the pellet where an irreversible chemical reaction changes the gases into harmless solids, eliminating the possibility of desorption.

Removal Capacity

Purafil ESD's Odoroxidant™ Media shall meet the following removal capacities:

- **Hydrogen Sulfide**: 18.0% min. by weight
- **Sulfur Dioxide**: 7.0% min. by weight

For example, 100 pounds (45.36 kg) of Purafil ESD's Odoroxidant™ Media will remove a minimum of 18 pounds (8.16 kg) of hydrogen sulfide.

Physical Properties

Purafil ESD's Odoroxidant™ Media shall have the following physical properties:

- **Moisture Content**: 35% Maximum
- **Crush Strength**: 35% - 70%
- **Abrasion**: 4.5% Maximum
- **Bulk Density**: 50 lbs/ft^3 (800 kg/m^3)
- **Pellet Diameter**: 1/16" - 1/8" (1.5 mm - 3.2 mm)
- **Potassium Permanganate Content**: 8% Minimum

Applications

Odoroxidant™ Media is designed for the removal of odorous gases pervasive in wastewater operations. The media is used in conjunction with other Purafil ESD media and serves to polish remaining odorous gases before discharge to the atmosphere.

Application Guidelines

Odoroxidant™ Media shall perform effectively under the following conditions and guidelines:

- **Temperature**: -4°F to 125°F (-20°C to 51°C)
- **Humidity**: 10 - 95% RH
- **Airflow**: Odoroxidant™ Media shall be effective in Purafil ESD systems, including the Drum Scrubber with airflows from 100 to 1,000 CFM (170 to 1699 m^3/hr), Tub Scrubber with airflows from 500 to 6,000 CFM (850 to 10,194 m^3/hr) and Deep Bed Scrubber with airflows from 600 to 8,000 CFM (1,020 to 13,592 m^3/hr). Odoroxidant™ Media shall also be effective in Vessel Scrubbers with airflows from 8,000 to 20,000 cfm (13,592 to 33,980 m^3/hr).

Other Media

Purafil manufactures specific media for selection based upon the composition of the contaminant gases present, concentration levels, airflow requirements, environmental concerns, and room design considerations. These media include Odormix™ for broad-spectrum removal of sewerage odors; Odorcarb™ II for removal of hydrogen sulfide, sulfur dioxide and chlorine; Odorkol™ for removal of hydrocarbons; Odorkol™ AM for removal of ammonia; CSO™ for emergency removal of sulfur dioxide and chlorine gas; Chlorosorb® II for removal of chlorine gas.

Purafil ESD, Your Single Source For...

- Media Manufacturing
- Equipment Design & Manufacturing
- Complimentary Media Life Analysis
- Monitoring Instruments & Programs

PURAFIL Environmental Systems Division

Purafil, Inc. • 2654 Weaver Way • Doraville, Georgia 30340 • Phone: (770) 662-8545 • Fax: (770) 263-6922 • www.purafil.com

PURAFIL Environmental Systems Division

Specification: Odoroxidant™ Media

Target Contaminants
- Aldehydes
- Amines
- Oxides
- Sulfur compounds

Media Specification
Purafil ESD's Odoroxidant™ media shall consist of manufactured, generally spherical, porous pellets. Pellets shall be formed from a combination of activated alumina and other binders suitably impregnated with potassium permanganate to provide optimum adsorption, absorption, and oxidation of a wide variety of gaseous contaminants. The potassium permanganate shall be applied during pellet formation such that the impregnant is uniformly distributed throughout the pellet volume and is totally available for reaction.

Chemisorptive Process
The Purafil ESD chemisorptive process shall remove contaminant gases by means of adsorption, absorption, and chemical reaction. Gases shall be trapped within the pellet, where an irreversible chemical reaction changes these gases into harmless solids, thus eliminating the possibility of desorption.

Removal Capacity
Purafil ESD's Odoroxidant™ media shall meet the following removal capacities:

- Hydrogen sulfide: 14.0% minimum by weight
- Sulfur dioxide: 7.0% min. by weight

For example, 100 lbs (45.36 kg) of Purafil ESD's Odoroxidant™ media will remove a minimum of 14 lbs (6.34 kg) of hydrogen sulfide.

Physical Properties
Purafil ESD's Odoroxidant™ media shall have the following physical properties:

- Moisture content: 35% maximum
- Crush strength: 35% - 70% maximum
- Abrasion: 4.5% maximum
- Bulk density: 50 lbs/ft^3 (800 kg/m^3)
- Pellet diameter: 1/16" - 1/4" (1.5 mm - 6.5 mm)
- Potassium permanganate content: 8% minimum

2654 Weaver Way Doraville, Georgia 30340 USA Ph: (770) 662-8545 (800) 222-6367 Fx: (770) 263-6922 www.purafil.com

Applications
Odoroxidant™ media is designed for the removal of odorous gases pervasive in wastewater operations. The media is used in conjunction with other Purafil ESD medias and serves to polish remaining odorous gases before discharge to the atmosphere.

Application Guidelines
Odoroxidant™ media shall perform effectively under the following conditions and guidelines:

• Temperature: -4° F - 125° F (-20° C - 51° C)

• Humidity: 10% - 95% RH

• Airflow: Odoroxidant™ media shall be effective in Purafil ESD systems, including the Drum Scrubber with airflows from 100 - 500 cfm (170 - 850 m^3/hr), Tub Scrubber with airflows from 1,000 - 4,000 cfm (1,700 - 6,800 m^3/hr), and Deep Bed Scrubber with airflows from 600 - 6,000 cfm (1,020 - 10,200 m^3/hr). Odoroxidant™ media shall also be effective in Purafil ESD systems with velocities from 60 - 100 fpm (0.3 - 0.5 m/s).

Installation and Disposal Requirements
• Installation: Installers shall use dust masks, safety goggles, and rubber gloves.

• Disposal: Spent Odoroxidant™ media shall be disposed of according to local, state, and federal guidelines.

2654 Weaver Way Doraville, Georgia 30340 USA Ph: (770) 662-8545 (800) 222-6367 Fx: (770) 263-6922 www.purafil.com

Purafil ESD's Odormix™ Media

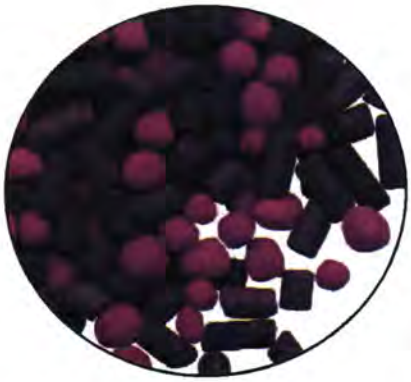

Proven Performance

Purafil ESD's Odormix™ Media offers broad spectrum removal of odorous gases related to sewerage treatment operations.

Characteristics

- Landfill disposable
- UL Classified Class 1
- Medias are pre-mixed at Purafil's factory
- Substitutes for a two-pass media system
- New and spent media is non-toxic

Media

Purafil ESD's Odormix™ Media shall consist of an equal mix (by volume) of Purafil ESD's Odoroxidant™ Media and Odorkol™ Media.

Odoroxidant™ Media shall be manufactured of generally spherical, porous pellets formed from a combination of powdered activated alumina and other binders, suitably impregnated with potassium permanganate to provide optimum adsorption, absorption and oxidation of a wide variety of gaseous contaminants. The potassium permanganate shall be applied during pellet formation, such that the impregnant is uniformly distributed throughout the pellet volume and is totally available for reaction. The Odorkol™ Media shall be a premium grade, activated carbon with a high surface area available for adsorption.

Disposal Requirements

Spent Odormix™ Media should be disposed of according to local, state and federal guidelines.

Physical Properties

Odormix™ Media bulk density is 40 lbs/ft³ (640 kg/m³).

Odoroxidant™ Media shall have the following physical properties:

- **Moisture Content:** 35% Maximum
- **Crush Strength:** 35% - 70%
- **Abrasion:** 4.5% Maximum
- **Bulk Density:** 50 lbs/ft³ (800 kg/m³)
- **Nominal Pellet Diameter:** 1/16" - 1/8" (1.5 mm - 3.2 mm)
- **Potassium Permanganate Content:** 8% Min.
- **Percentage of Pellet Remaining:** 80-85% after screening

Odorkol™ Media shall have the following physical properties:

- **Moisture Content:** >3%
- **CTC:** 55 Minimum
- **Base Material:** Activated Carbon
- **Bulk Density:** 30 lbs/ft³ (480 kg/m³)
- **Pellet Diameter:** 1/16" - 1/8" (1.5 mm - 3.2 mm)

Applications

Purafil ESD's Odormix™ Media is designed for broad spectrum removal of odorous gases, including mercaptans, hydrocarbons, hydrogen sulfide and sulfur dioxide. Odormix™ Media is recommended when space within Purafil ESD's multi-stage scrubber is limited; in this application, Odormix™ substitutes for two media passes. Odormix™ is also recommended as a polishing media.

Application Guidelines

Odormix™ Media shall perform effectively under the following conditions and guidelines:

- **Temperature:** -4°F to 125°F (-20°C to 51°C)
- **Humidity:** 10 - 95% RH
- **Airflow:** Odormix™ Media shall be effective in Purafil ESD systems, including the Drum Scrubber with airflows from 100 to 1,000 CFM (170 to 1699 m³/hr), Tub Scrubber with airflows from 500 to 6,000 CFM (850 to 10,194 m³/hr) and Deep Bed Scrubber with airflows from 600 to 8,000 CFM (1,020 to 13,592 m³/hr). Odormix™ Media Media shall also be effective in Vessel Scrubbers with airflows from 8,000 to 20,000 cfm (13,592 to 33,980 m³/hr).

Other Media

Purafil ESD's Odormix™ Media can be used with other media manufactured by Purafil, Inc. Specific media are available for selection based upon the composition of the contaminants present, gaseous concentration levels, airflow requirements and environmental concerns. These media include Odoroxidant™ for the removal of sulfur dioxide, hydrogen sulfide, aldehydes and many organic compounds; Odorcarb™ II for the removal of hydrogen sulfide, sulfur dioxide and chlorine; Odorkol™ for the removal of hydrocarbons; Odorkol™ AM for the removal of ammonia; and Chlorosorb® II for the specific gas removal of chlorine.

Purafil ESD, Your Single Source For...

- Media Manufacturing
- Equipment Design & Manufacturing
- Complimentary Media Life Analysis
- Monitoring Instruments & Programs

PURAFIL® Environmental Systems Division

Purafil, Inc. • 2654 Weaver Way • Doraville, Georgia 30340 • Phone: (770) 662-8545 • Fax: (770) 263-6922 • www.purafil.com

PURAFIL
Environmental Systems Division

Specification: Odormix™ Media

Target Contaminants
- Mercaptans
- Hydrocarbons
- Hydrogen sulfide
- Sulfur dioxide

Media Specification
Purafil ESD's Odormix™ media shall consist of an equal mix by volume of Purafil ESD's Odoroxidant™ media and Odorkol™ media.

Odoroxidant™ media shall be manufactured of generally spherical, porous pellets formed from a combination of powdered activated alumina and other binders suitably impregnated with potassium permanganate to provide optimum adsorption, absorption, and oxidation of a wide variety of gaseous contaminants. The potassium permanganate shall be applied during pellet formation such that the impregnant is uniformly distributed throughout the pellet volume and is totally available for reaction.

Odorkol™ Media shall be a premium grade activated carbon with a high surface area available for adsorption.

Physical Properties
Odormix™ media shall have the following physical properties:

- Bulk density: 40 lbs/ft^3 (640 kg/m^3)

Odoroxidant™ media

- Moisture content: 35% maximum
- Crush strength: 35% - 70% maximum
- Abrasion: 4.5% maximum
- Bulk density: 50 lbs/ft^3 (800 kg/m^3)
- Nominal pellet diameter: 1/16" - 1/4" (1.5 mm - 6.5 mm)
- Potassium permanganate content: 8% minimum
- Percentage of pellet remaining: 80 - 85% after screening

2654 Weaver Way Doraville, GA 30340 USA Ph: (770) 662-8545 (800) 222-6367 Fx: (770) 222-6367 www.purafil.com

Odorkol™ media

- Moisture content: >3%
- CTC: 55 minimum
- Base material: Activated carbon
- Bulk density: 30 lbs/ft^3 (480 kg/m^3)
- Pellet diameter: 1/16" - 1/4" (1.5 mm - 6.5 mm)

Applications
Odormix™ media is recommended when space within Purafil ESD's multi-stage scrubber is limited; in this application, Odormix™ substitutes for two media passes. Odormix™ is also recommended as a polishing media.

Application Guidelines
Purafil ESD's Odormix™ media shall perform effectively under the following conditions and guidelines:

- Temperature: -4° F - 125° F (-20° C - 51° C)

- Humidity: 10% - 95% RH

- Airflow: Odormix™ media shall be effective in Purafil ESD systems, including the Drum Scrubber with airflows from 100 - 500 cfm (170 - 850 m^3/hr), Tub Scrubber with airflows from 1,000 - 4,000 cfm (1,700 - 6,800 m^3/hr), and Deep Bed Scrubber with airflows from 600 - 6,000 cfm (1,020 - 10,200 m^3/hr). Odormix™ media shall also be effective in Purafil ESD systems with velocities from 60 - 100 fpm (0.3 - 0.5 m/s).

Installation and Disposal Requirements
- Installation: Installers shall use dust masks, safety goggles, and rubber gloves.

- Disposal: Spent Odormix™ media shall be disposed of according to local, state, and federal guidelines.

2654 Weaver Way Doraville, GA 30340 USA Ph: (770) 662-8545 (800) 222-6367 Fx: (770) 222-6367 www.purafil.com

SERVICE GUIDE #122

Installation, Operation
&
Maintenance Instructions

Drum Scrubbers

DS-100 (170 m^3/hr) , DS-300 (510 m^3/hr), DS-500 (850 m^3/hr), & DS-1000 (1700 m^3/hr) Models

Manufactured by:

Purafil, Inc.

2654 Weaver Way
Doraville, GA, U.S.A. 30340
Telephone: (770) 662-8545
Fax: (770) 263-6922

Distributed by:

Airepure Australia

64 Geddes Street
Mulgrave, Victoria 3170
Telephone: 1300 886 353
Offices: Vic, NSW & SA

TABLE OF CONTENTS

1.0 PRE-INSTALLATION INSTRUCTIONS
- 1.1 SAFETY CONSIDERATIONS
- 1.2 RECEIVING INSTRUCTIONS
- 1.3 INSPECTION
- 1.4 STORAGE
- 1.5 FOUNDATIONS AND CLEARANCES

2.0 BASIC DESIGN OF THE DRUM FILTER

3.0 INSTALLATION
- 3.1 POSITIONING THE UNIT
- 3.2 MEDIA BANK FILLING INSTRUCTIONS (INITIAL START-UP)
- 3.3 MEDIA BANK FILLING INSTRUCTIONS (MEDIA REPLACEMENT)
- 3.4 POST-START INSPECTION/CHECK

4.0 MAINTENANCE
- 4.1 REPLACEMENT PARTS AND MATERIALS
- 4.2 MEDIA REPLACEMENT
- 4.3 SPECIAL PRECAUTIONS
- 4.4 PURAFIL® STAIN REMOVAL

5.0 WARRANTY

6.0 TROUBLE SHOOTING

7.0 SAMPLING RECORD

LIST OF FIGURES

FIGURE	TITLE
1	BASIC DESIGN

1.0 PRE-INSTALLATION INSTRUCTIONS

Service Guide #122 – Rev. 05/00

1.1 SAFETY CONSIDERATIONS

- Read this Service Manual carefully. Be thoroughly familiar with the controls and the proper use of the equipment.
- This manual should be retained with the unit because it contains the information necessary for proper maintenance.
- Keep all nuts, bolts, and screws tight to be sure the equipment is in safe working condition.

CAUTION:

- Installer should be a trained, experienced service person.
- Check the assembly and component weights to be sure that the rigging equipment can handle them safely.
- Be sure that the unit is balanced well in the transporting device.
- Always conduct a thorough check when the installation is complete.
- Never enter an enclosed blower cabinet or reach into a chousing while fan is running.
- The motors in PURAFIL® equipment get very hot. This is normal and should not be regarded as a problem with the motor. However, take special care to avoid touching the hot areas.

1.2 RECEIVING INSTRUCTIONS

Systems are normally shipped assembled and with motors mounted. All units are attached securely to skids. It is recommended that units be left on their skids for protection and ease of handling while transporting. Straps, rigging, slings, or hooks attached to the skids may be used, with proper care. The units are well protected with triple wall board and are secured with metal bands. Forklifts may be used under the skids, but exercise caution to prevent damage.

Upon receiving systems from Purafil, Inc., note any shipping damage, obvious or hidden, to your carrier and on your Bill of Lading. All problems should be handled between the customer and carrier except for U.P.S. shipments, which require the customer to contact Purafil, Inc. for action.

- If the unit is to be stored before use, see Section 1.4 in this manual.
- If the unit is to be installed immediately, be sure to check Section 3.0 in this manual.
- To uncrate unit, cut metal bands and remove packaging.
- For positioning and special handling, see Section 3.1 in this manual.

1.3 INSPECTION

The condition of the unit upon its arrival is critical to its proper operation. Prior to start-up, inspect the unit carefully, according to the checklist below. Correct any inadequacies before start-up to prevent possible damage or inefficiency. Note, should there be any questions concerning the unit, refer to the numbers found on the unit identification plate, when contacting the PURAFIL® representative.

PRE-OPERATION CHECK LIST

YES	NO	CONDITION
____	____	1. Configuration and material are as specified on the sales order form
____	____	2. Measurements fit submittal requirements

____ ____ 3. Parts are all present

____ ____ 4. Latches hold securely and gaskets seal properly

____ ____ 5. Labels and serial numbers are present

____ ____ 6. Airflow direction is consistent with installation requirements (check labels attached to unit)

Note: Checking specific points is also imperative after the unit is started up. See section 3.4 in this manual for checklist.

1.4 STORAGE

The unit should be protected from the elements during storage, especially when storage time is extensive. While indoor storage is considered best, outdoor storage can be adequate when precautions are taken.

OUTDOOR STORAGE PRECAUTIONS

- Cover the equipment with a tarp. Intake and discharge openings must be well covered. (Use of black plastic as a cover may cause excessive condensation and rusting.)
- If there is the possibility of moisture collection, allow for proper drainage.
- Do not place heavy equipment on top of the unit.
- Store Purafil® media in a dry place with less than 95% relative humidity.

1.5 FOUNDATION AND CLEARANCES

FOUNDATIONS

Some units may require new or reinforced foundations, due to their weight. Always be sure to check that the existing foundation is adequate for the unit to be installed. Units to be used indoors require particular attention to strength of foundation. In some instances, a concrete base is best suited to the system. Concrete lessens the chance for vibration than if metal structures are used.

CLEARANCE

All units should be easily accessible for the required periodic maintenance. Do not block return and discharge grilles. Sufficient minimum clearances can be recommended by the local PURAFIL® representative.

2.0 BASIC DESIGN OF THE DRUM FILTER

Designed to clean odorous air, the drum filter, coupled with the final particulate filter, contains an inlet pipe, blower, a media bed housed in a LDPE drum, and diffuser. Pre-engineered in a single unit, the drum filter is designed to exhaust recycled air. The drum filter is supplied with Odoroxidant™, Odorcarb™ II and Odormix™ media. The drum filter has a quiet, low horsepower motor and low pressure drop.

The drum filter includes the following components:

1. INLET PIPING/DIFFUSER – Air enters through a 100 mm (4"), (DS-100, 170 m^3/hr, 100 cfm model), 200mm (8"), (DS-300, 510 m^3/hr & DS-500, 850 m^3/hr, 300 & 500 cfm models) and 254 mm (10"), (DS-1000, 1700 m^3/hr, 1,000 cfm model) Fernco fitting prior to entering the drum.
2. MEDIA BED –
   - DS-100 (170 m^3/hr ,100 cfm model) consists of 0.028m^3 (1 ft^3), 22.7 kg of Odoroxidant media, 0.056m^3 (2 ft^3), 41 kg

of Odorcarb II media and, 0.056m^3 (2 ft^3), 36 kg of Odormix. Each cubic foot of media is contained in a MediaSak for easy handling and disposal.

- DS-300 (510 m^3/hr, 300 cfm model) comes complete with 0.056m^3 (2 ft^3), of Odoroxidant™ media (45 kg's), 0.14m^3 (5 ft^3) of Odorcarb™ II media (102 kg's) and 0.084m^3 (3 ft^3) of Odormix™ media (55 kg's.).
- DS-500 (850 m^3/hr, 500 cfm model) comes complete with 0.084m^3 (3 ft^3) of Odoroxiant media (68 kg's), 0.28m^3 (10 ft^3) of Odorcarb II media (205 kg's) and 0.112m^3 (4 ft^3) of Odormix media (73 kg's).
- DS-1000 (1,700 m^3/hr, 1,000 cfm model) comes complete with 0.224m^3 (8 ft^3) of Odoroxiant media (183 kg's), 0.588m^3 (21 ft^3) of Odorcarb II media (431 kg's) and 0.28m^3 (10 ft^3) of Odormix media (183 kg's).

3. BLOWER – the air is then propelled further by the blower assembly which includes a mill and chemical duty motor and direct drive blower, assuring even, quiet airflow.

4. FINAL FILTER (DS-300, DS-500 & DS-1000) – any remaining contaminants, such as media dust and airborne contaminants are removed in this final stage by a polymedia filter.

FIGURE 1: BASIC DESIGN

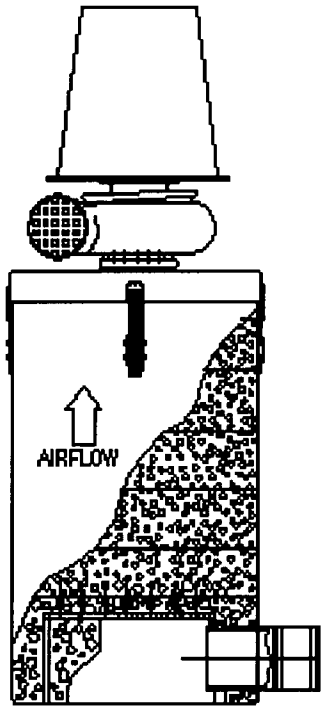

3.0 INSTALLATION

After the entire pre-operative inspection is finished (Section 1.3), complete the following sequence for installation:

(1) Remove the unit from the skid and position it in the designated operation location.

(2) Plug in the electrical connections.

(3) Start the unit.

(4) Perform post-start inspection check. (See Section 3.5)

3.1 POSITIONING THE UNIT

The standard unit can simply be transported by lift to its pre-designed operation location (if in

close proximity to the skid), according to facility safety requirements.

3.2 MEDIA FILLING INSTRUCTIONS (FOR INITIAL START-UP)

Proper filling, installation, and maintenance of the chemical filtration media is critical to the unit's efficient operation. The drums are designed specifically for media manufactured by Purafil, Inc. and allows the system to perform at maximum efficiency, through proper shape and bed depth. Drum filters are pre-filled with media at the factory.

3.4 MEDIA FILLING INSTRUCTIONS (FOR MEDIA REPLACEMENT)

Once media analysis (DS-300, DS-500 & DS-1000 models only) has determined that it is time for a replacement supply of media, replace the media according to the instructions below. Please note that after each media type or MediaSak is installed it is imperative that it is leveled out across the drum. This is to eliminate bypass and channeling effects.

For DS-100 Model:

- Media replacement is accomplished by removing the motor/blower lid assembly. Disconnect power supply.
- Remove MediaSaks (5).
- Install new MediaSaks (5).
- Install motor/blower lid assembly.
- See Section 4.3 for disposal precaution.

For DS-300, DS-500 & DS-1000 Models:

- Remove motor/blower lid assembly. Disconnect power supply.
- Remove Polymedia (blue) filter.
- Remove layer of Odormix™ media.
- Remove layer of Odorcarb™ II media.
- Remove layer of Odoroxidant™ media.
- Remove Polymedia (blue) filter.
- Install bottom Polymedia (blue) filter.
- Install new Odoroxidant media.
- Install new Odorcarb II media.
- Install new Odormix media.
- Install top Polymedia (blue) filter.
- Install motor/blower lid assembly.
- Connect power supply.
- See Section 4.3 for disposal precaution.

3.4 POST-START INSPECTION/CHECK

Before initial start-up of system, contact your local PURAFIL® representative. Their name and phone number is attached to your system. *Operate all DS models at the lowest air flow required to maintain a negative pressure and maximize media life.*

YES	NO	CONDITION
____	____	1. Joints, seals, and gaskets do not leak.
____	____	2. Particulate filters have been installed.

4.0 MAINTENANCE

4.1REPLACEMENT PARTS AND MATERIALS

While Purafil, Inc. products are built for durability, some parts of the PURAFIL® unit will require replacement during the normal lifetime of the equipment. Replacement items may be ordered from your local PURAFIL® representative or from Purafil, Inc.

Consumables: In order to maintain proper performance levels, particulate filters and PURAFIL® media must be replaced periodically, as they have a finite life (See Sampling Procedure Service Guide).

Moving Parts: Bearings, motors, etc. are all subject to gradual deterioration and/or sudden breakdown.

4.2 MEDIA REPLACEMENT

Need for Sampling (DS-300, DS-500 & DS-1000 models only)

1. PURAFIL® media has a finite life which is a function of the available potassium permanganate ($KMnO_4$) expressed as a percentage.

2. After start-up, your local Purafil representative will work with the owner to periodically secure media samples. Purafil, Inc. will provide regular laboratory analysis of such samples to establish life cycles. Note, color change of media does not indicate level of remaining life.

3. Since every installation varies due to the type and quantity level of the contaminant, each operator must develop a sample schedule best suited to their system. However, until a schedule can be established, we recommend that a sample is taken and sent for analysis, so that a replacement date can be projected with a recommended sampling schedule.

4. To take a sample from the media, utilize the media sampling ports located on the outside of the drum and insert the sampling probe into the media bed.

   Open the entry port of the sampling probe, pulling up until the port cover slides open.

   Close the sampling probe by pushing down and pour the contents into the plastic sample bag provided by your PURAFIL® representative.

   Seal tightly and label the laboratory bag. Use the same label name on the Transmittal Sheet.

   Place a label on the media bed to show that a sample was taken from it.

   Fill out the PURAFIL® Sample Transmittal and send it with the samples to the local representative or to the Purafil, Inc. laboratory. A replacement sampling kit will be mailed to you.

   A sampling record sheet is included with this manual. Record the following data, and file all related reports with the record sheet:

   - Date sample taken and mailed
   - Results of life analysis as reported by the Purafil Laboratory.

   After the Purafil® laboratory has analyzed the sample, a Certificate of Analysis will be sent to you detailing the approximate percentage of total life consumed, and if installation and sampling dates are provided, a projected replacement date will be given for each unit.

   The projected replacement dates may be used in updating budget requirements, and as a guide in ordering replacement material; however, since contaminant load is rarely constant, avoid relying too heavily on projected replacement dates.

   By maintaining up-to-date records showing the life expenditures of each filter bank, media banks with the greatest percentage of life expended can be replaced before other banks, which have less life expended.

4.3 SPECIAL PRECAUTIONS

Disposal

PURAFIL® media is a non-toxic, non-flammable substance. Filtration of contaminants through PURAFIL® media causes molecular changes to occur, and the resulting product is usually not harmful to the environment. Although special precautions are generally not required when disposing of spent media, government regulations

may require specific disposal procedures if the resulting product could be harmful to the environment. Large quantities of PURAFIL® media should not be disposed of in dumpster-like equipment because the weight of the media could cause difficulties in handling the dumpster.

Independent laboratory analysis for Environmental Protection Agency toxicity characteristics may be required if the contaminants eliminated from your environment include heavy metals and pesticides.

Inhalation

A well-ventilated work area is suggested for changing the PURAFIL® media, as dusting occurs in fresh media due to handling abrasion. Workers should avoid direct inhalation of considerable PURAFIL® dust, as it induces sneezing. In closed, unventilated spaces, dust masks such as the 3-M No. 8500 are suggested.

Water

Avoid exposing the PURAFIL® media to water or precipitation, as this dissolves permanganate content. Storage of media should be in a dry place with less than 95% relative humidity. Exposure of permanganate solution to the skin causes brown staining which is temporary and not harmful. This staining can be removed by washing in a diluted solution of water and sodium bisulfite.

Eye Contact

If dust is exposed to the eyes or delicate membrane, flush thoroughly with water and seek treatment by a physician. Follow normal procedures for exposure to abrasive dust.

4.4 PURAFIL® STAIN REMOVAL

The following stain removal procedure is stated here as information only, and neither Purafil, Inc., any of its subsidiaries, nor any agent or employee of Purafil, Inc. make any warranty or other representation regarding the efficacy or safety of this procedure. The stain removal could cause further damage to the garment or to the item from which one may attempt to remove the stain.

If the dust from PURAFIL® media comes in contact with organic material, there are two possible stain problems:

1. Manganese dioxide (MnO_2) which is insoluble, characterized by a medium brown color, and is found in expended PURAFIL media, can usually be removed by normal washing.

2. New (unused) PURAFIL® media contains potassium permanganate ($KMnO_4$), which is a strong oxidant and will react with and discolor any organic material with which it comes in contact. These stains, which will be brownish black in color, may be removed using a solution of sodium bisulfite in water, after the garment has been removed from the person.

However, if the fiber has been damaged by the permanganate, removal of the stain may make the damage more apparent.

CAUTION: This procedure should start with a very weak solution, gradually increasing the strength until the stain is removed. Use of too strong a solution could conceivably cause additional fabric damage.

NOTE: Sodium bisulfite gives off sulfur dioxide (SO_2) gas; therefore, it must be used in a well-ventilated area.

5.0 WARRANTY

PURAFIL warrants hardware equipment manufactured by PURAFIL to be free from defects in material and workmanship under normal use and service for one (1) year from shipment date. PURAFIL's obligation under this warranty shall be limited to replacing any parts thereof which shall be demonstrated to have been defective. THIS WARRANTY IN LIEU OF ALL OTHER WARRANTIES, EXPRESSED OR IMPLIED, INCLUDING THE WARRANTIES OF MERCHANTABILITY AND FITNESS.

PURAFIL MAKES NO WARRANTIES AS TO MERCHANTABILITY OR AS TO THE FITNESS OF THE MERCHANDISE FOR ANY PARTICULAR USE AND SHALL NOT BE LIABLE FOR ANY LOSS OR DAMAGE, DIRECTLY OR INDIRECTLY, ARISING FROM THE USE OF SUCH MERCHANDISE OR FOR CONSEQUENTIAL DAMAGES. No person, firm or corporation is authorized to assume for PURAFIL any other liability in connection with the sale of these goods. Equipment, parts, and material manufactured by others and incorporated in PURAFIL equipment are warranted by PURAFIL ONLY TO THE EXTENT OF THE ORIGINAL MANUFACTURERS LIABILITY TO PURAFIL.

6.0 TROUBLESHOOTING

	SYMPTOM	PROBLEM	CHECKS/REMEDY
Media Bank	Airflow too low	Filters loaded	Replace filters

Service Guide #122 – Rev. 05/00

7.0 SAMPLE RECORD

Sampling Record/Schedule					

Represented By

Important Notice

The information contained in this Bulletin reflects the results of various testing and analytical procedures believed by PURAFIL, INC. (a U.S.A. corporation) to be useful indicators of the relative performance of air filtration systems and media. It is intended for use by persons having appropriate scientific and technical knowledge and experience at their own risk. This bulletin does not in any way constitute a representation, warranty, promise, or guarantee by PURAFIL, INC. of the installed performance of PURAFIL® media.

Service Guide #122 – Rev. 05/00

Appendix B: Mechanical Drawing

Drawing No.	*Description*
CC-070104	DS-1000 Drum Scrubber with Blower & Rainhood

© Airepure Australia Pty. Ltd.

Environmental Systems
A Division of Purafil, Inc.
2654 WEAVER WAY
DORAVILLE, GA 30340
(770)662-8545

1000 CFM DRUM SCRUBBER
WITH BLOWER & RAINHOOD

JOB/UNIT IDENTIFICATION:

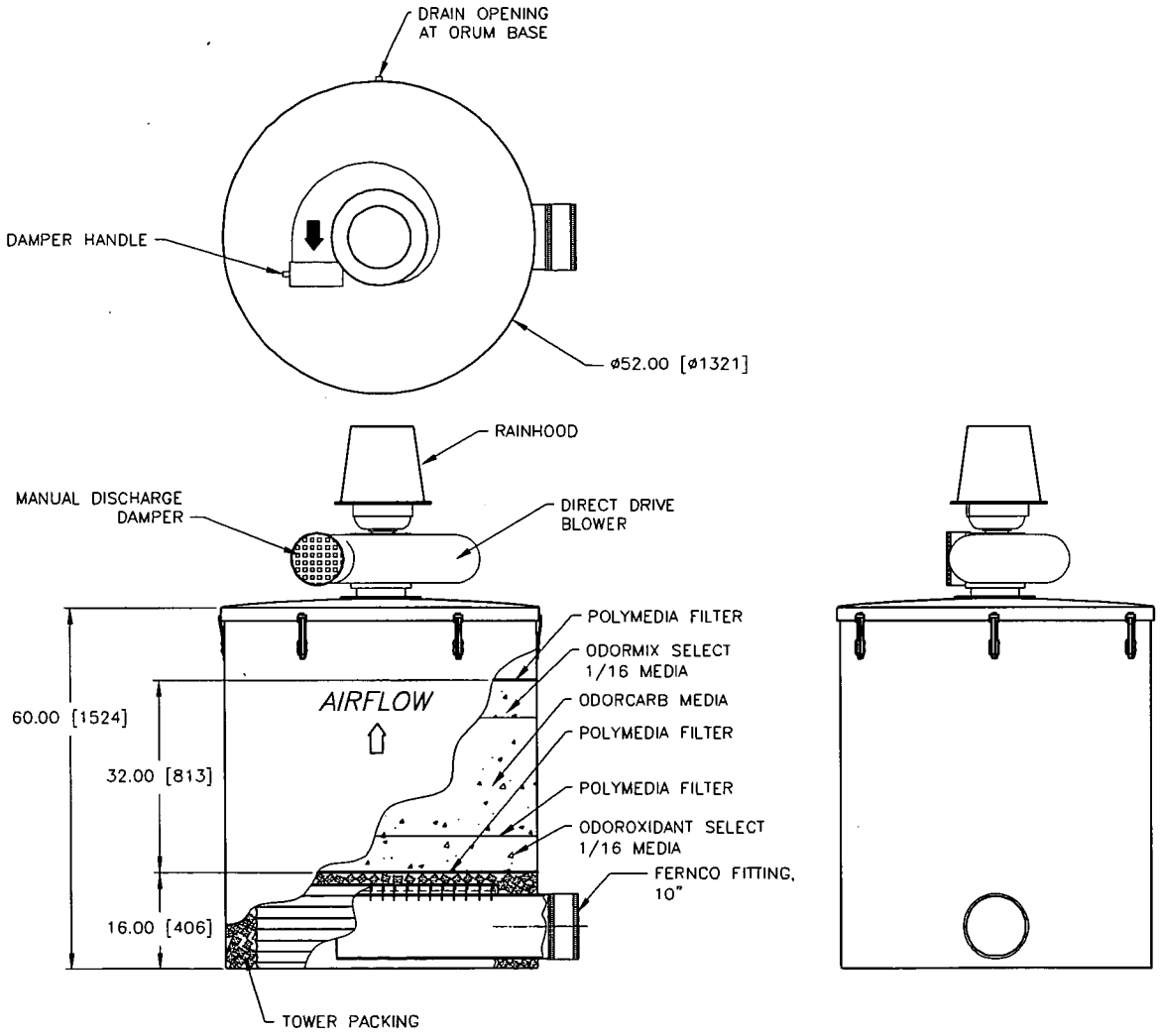

MODEL #: DS-1000

MATERIAL:
DRUM – LOW DENSITY POLYETHYLENE

FINISH:
DRUM – BLACK

ELECTRICAL:

VOLTS	PH	HZ	HP	TYPE
(STD) 115/230	1	60	3.0	TEFC

MAX RECOMMENDED AIRFLOW:
1500 CFM W/2.25 IWG ESP AVAILABLE

MIST ELIMINATOR:

TYPE	QTY	SIZE
NONE		

PURAFIL® AIR PURIFICATION MEDIA(S) IN DIRECTION OF AIRFLOW:

MEDIA TYPE	TOTAL MEDIA
ODOROXIDANT SELECT 1/16	400 LB [181 KG]
ODORCARB	945 LB [429 KG]
ODORMIX SELECT 1/16	400 LB [181 KG]

INLET CONNECTION:
10.0" [254mm] INLET

☐ FOR APPROVAL ☐ FOR INFORMATION
☐ FOR CONSTRUCTION ☐ AS BUILT

DATE: 07/01/04
REV DATE:
APPROXIMATE OPERATING WEIGHT: 1938 LB [879 KG]
APPROVED BY: AAY/BLG
DRAWING NUMBER: CC-070104
REVISION: –

This drawing is the property of Purafil, Inc. and is not to be reproduced or copied in whole or in part. It is only to be used for the project and site specifically identified herein and is not to be used in any other project. It is to be returned upon request.

DIMENSIONS ARE IN INCHES. METRIC EQUIVALENTS IN BRACKETS [ ] ARE IN MILLIMETERS.
PURAFIL, INC. RESERVES THE RIGHT TO MODIFY DESIGN FOR IMPROVED PRODUCT PERFORMANCE.
PURAFIL®, PURAFIL II®PURASORB®, CHLOROSORB®, AND THE SCOOTER® SKUNK EMBLEM (REG. U.S.PAT. & TM OFFICE),PURASTAT™, HEBA-LOCK™, CORROSIVE-AIRE™,E.S.™,PURACARB™,PM™ SERIES AND THE DISTINCTIVE SHAPE OF PM™ MODULES ARE TRADEMARKS OF PURAFIL™ INC.,A U.S.A.CORPORATION.

Appendix C: Material Safety Data Sheets.

No.if applicable	*Description*
	MSDS Purafil Odorcarb II Media
	MSDS Purafil Odoroxidant Media
	MSDS Purafil Odormix Media

© Airepure Australia Pty. Ltd.

PURAFIL Environmental Systems Division

MATERIAL SAFETY DATA SHEET

1. PRODUCT AND COMPANY IDENTIFICATION

Product Name (as used on the label): Odorcarb™ II Media

Product Synonyms:
Puracarb II WW, Odorcarb™ II

Supplier Name and Address:

Airepure Australia P/L
64 Geddes Street
MULGRAVE VIC 3170

Contact: 1300 886 353

2. COMPOSITION / INFORMATION ON INGREDIENTS

Preparation Chemical Nature:
The preparation is a combination of both solid base substances as well as liquid impregnants. The combined properties of the preparation are less reactive than the most reactive individual substances listed below.

COMPONENTS

Common Chemical Name	Synonyms	CAS Number	Wt %
Water	dihydrogen oxide	7732-18-5	≤35
aluminum oxide (non-fibrous)	activated aluminas; activated and amorphous aluminas	1333-84-2*	≤32
proprietary ingredient	--	--	≤32
activated carbon	carbon; carbon, activated	7440-44-0	≤32
potassium hydroxide	caustic potash, liquid	1310-58-3	>5

*For TSCA inventory reporting purposes, CAS No. 1344-28-1 was assigned for all forms of aluminum oxide instead of the CAS No. 1333-84-2 as indicated above.

3. HAZARDS IDENTIFICATION

Most Important Hazards:

- If crushed or handled extensively, dust may evolve and can be irritating to the eyes, skin, and respiratory tract.
- Wet activated carbon removes oxygen from the air causing severe hazards for workers in enclosed spaces. The product is by no means one hundred percent activated carbon, but it may have the potential to act as described above. Before entering such an area, sampling and work procedures for low oxygen levels should be taken to ensure ample oxygen availability, observing all local, state, and federal regulations.
- Solutions of this product may be caustic due to high pH.

Adverse Human Health Effects:

- The following medical conditions may be aggravated by exposure to the product: asthma, chronic lung disease, and skin rashes.
- In solution, this product may produce a basic (caustic) solution and similar precautions should be taken as those for basic (caustic) solutions when such a solution is produced.

Environmental Effects:

If contacted by water, the active ingredients may produce a basic solution depending on amounts of media and water. If such a solution is produced, the pH should be checked and kept within local regulations by buffering with suitable neutral or acidic agent.

Emergency Overview:

Inhalation: Move to fresh air. If breathing difficulty occurs or persists, seek medical attention.
Skin Contact: Wash area with soap and water.
Eye Contact: Flush with large quantities of water for 15 minutes. Seek medical attention.
Ingestion: Seek medical attention.

4. FIRST-AID MEASURES

First aid measures should be taken as indicated below for the following routes of exposure.

Inhalation:

Move to fresh air. If breathing difficulty occurs or persists, seek medical attention.
Skin Contact: Wash area with soap and water.
Eye Contact: Flush with large quantities of water for 15 minutes. Seek medical attention.
Ingestion: Seek medical attention.

Notes to Physician:

Treatment is recommended to be symptomatic and supportive. If patient has been exposed to this product in solution, the solution may be basic (caustic), treat the affected person appropriately.

5. FIRE-FIGHTING MEASURES

Suitable Extinguishing Media:
If involved in a fire, flood with plenty of water.

Specific Hazards:
When involved in a fire, the dilute potassium hydroxide may liberate hydrogen and the solid base materials may liberate carbon monoxide.

Protection of Firefighters:
Fire fighters should wear NIOSH approved, positive pressure, self-contained breathing apparatus and full protective clothing.

6. ACCIDENTAL RELEASE MEASURES

Personal Precautions:
Protective clothing appropriate for the environment should be worn. Goggles or safety glasses with side shields, NIOSH approved dust masks, rubber or plastic gloves, and full cover clothing covering arms and legs are recommended.

Environmental Precautions:
See section **3. HAZARDS IDENTIFICATION, Environmental Effects.**

Methods for Cleaning Up:
Clean up using dry procedures (broom, shovel, etc.); avoid dusting.

Recovery:
Product may be recovered for use if it has not come in contact with liquid, changed color, or been exposed to significant amounts of gaseous contaminants.

Neutralization:
See section **3. HAZARDS IDENTIFICATION, Environmental Effects.**

Disposal: See section **13. DISPOSAL CONSIDERATIONS.**

7. HANDLING AND STORAGE

Handling:
Use air conveying (vacuum) for bulk removal. If manual handling is used for transfer (from vessel, slingbags, boxes, or pails), use mechanical ventilation or other measures to remove airborne dust.

Technical Measures:
The following precautions should be taken when handling the product.

Prevention of User Exposure:
Goggles or safety glasses with side shields are recommended.
NIOSH approved dust masks are recommended.
Rubber or plastic gloves are recommended.
Full cover clothing covering arms and legs is recommended.

Precautions for Safe Handling:

- Wet activated carbon removes oxygen from the air causing severe hazards for workers in enclosed spaces. The product is by no means one hundred percent activated carbon, but it may have the potential to act as described above. Before entering such an area, sampling and work procedures for low oxygen levels should be taken to ensure ample oxygen availability, observing all local, state, and federal regulations.
- Avoid crushing the product to keep dusting to a minimum. As described under **Handling** above, mechanical ventilation or other measures may be needed to remove airborne dust.
- Protect from water and exposure to contaminated air (gaseous, particulate, and aerosol contaminated), otherwise the product may be rendered useless.

Storage:
General good storage practices should be followed.

Storage Conditions:
The following storage conditions should be maintained.

Suitable Conditions:
Store in a cool, dry area and keep in original, closed containers.

Incompatible Products:
Product should be kept protected from water and exposure to contaminated air (gaseous, particulate, and aerosol contaminated), otherwise the product may be rendered useless.

Packaging Materials:
The following materials are used and should be used for packaging of the product. These are intended to keep contaminants away from the product.

Recommended Materials:

- Corrugated boxes of 350 lb, double wall quality, with 4 mm plastic liners.
- Injection molded, polystyrene pails and lids including a neoprene seal.

Not Suitable Materials:
Porous materials allowing contact with water, air, and the contaminants contained therein.

8. EXPOSURE CONTROLS / PERSONAL PROTECTION

Engineering Measures:
Minimize eye and skin contact by using appropriate protective equipment. Use local or general room ventilation to control airborne dust that may be generated.

Personal Protective Equipment:
The following recommendations are made for appropriate personal protective equipment for the following.

Respiratory Protection: NIOSH approved dust mask
Hand Protection: Rubber or plastic gloves
Eye Protection: Goggles or safety glasses with side shields
Skin and Body Protection: Full cover clothing covering arms and legs.
Hygiene Measures: Do not inhale dust and avoid contact with eyes.

9. PHYSICAL AND CHEMICAL PROPERTIES

Physical State: Solid
Form: Spherical pellets approximately 1.5 – 6.4 mm (1/16 – 1/4 in.) in diameter
Color: Black
Odor: No significant odor
PH: Not relevant
Temperature of Physical State Change: Not relevant
Flashpoint: Not relevant
Ignition Temperature: >300°C (572°F)[1]
Bulk Density: 0.721 g/cc (45 lb/ft^3)
Solubility: Insoluble

10. STABILITY AND REACTIVITY

Stability: Stable under normal conditions.
Hazardous Reactions: none known
Materials to Avoid:
Protect from water and exposure to contaminated air (gaseous, particulate, and aerosol contaminated), otherwise the product may be rendered useless.

Hazardous Decomposition Products:
When involved in a fire, the dilute potassium hydroxide may liberate hydrogen and the solid base materials may liberate carbon monoxide.

Intended Use and Foreseeable Misuse:
Intended use is for air purification from gaseous contaminants. The product is not intended to remove dangerous particulates or biological contaminants. Other media/systems would be required for those. The product is not intended to purify water.

11. TOXICOLOGICAL INFORMATION

Acute Toxicity: Expected to be low[2], not tested
Local Effects:
See section **3. HAZARDS IDENTIFICATION, Adverse Human Health Effects.**

Sensitization:
Primary skin irritation and corrosivity (rabbits): expected to be low[2], not tested
Eye irritation (rabbits): expected to be an irritant[2], not tested

Primary Route of Entry: Inhalation, ingestion, skin contact, eye contact

12. ECOLOGICAL INFORMATION

Not determined. See Section **3. HAZARDS IDENTIFICATION, Environmental Effects.**

13. DISPOSAL CONSIDERATIONS

Waste From Residues:
New product (media) can generally be disposed of in a landfill. Spent media that has removed toxic chemicals should be examined for specific hazards. Local regulations should always be consulted and followed.

Contaminated Packaging: Not relevant

14. TRANSPORT INFORMATION

International Regulations:
Odorcarb II media contains approximately 30% (by weight) activated carbon, which is produced by a steam activation process. Because of this Odorcarb II is not subject to the provisions of the International Dangerous Goods Code (IMDG) or the labeling and packaging requirements of International Maritime Organization (IMO) Class 4.2.

Proper Shipping Name: Not Applicable

15. REGULATORY INFORMATION

Regulations:
This section contains information specifically applicable to the chemical product relative to the following regulations. Local regulations should always be consulted and followed.

SARA Title III (Superfund Amendments and Reauthorization Act)

Section 302 Extremely Hazardous Substances (40CFR355): Not Listed

Section 312 Hazard Categories (40CFR370.2):
Only expected as Acute (eye irritant), see section **11 TOXICOLOGICAL INFORMATION**

Section 313 Reportable Ingredients (40CFR372): None listed.

16.OTHER INFORMATION

Disclaimer:
The information contained herein is accurate to the best of our knowledge. We do not suggest or guarantee that any hazards listed herein are the only ones, which exist. Purafil, Inc. makes no warranty of any kind, express or implied, concerning the safe use of this material in your process or in combination with other substances. Effects can be aggravated by other materials and/or this material may aggravate or add to the effects of other materials. The user has sole responsibility to determine the suitability of the material for any use and the manner of use contemplated.

---

[1] According to ASTM D 3466-76 - Standard Test Method for Ignition Temperature of Granular Activated Carbon.
[2] According to methods described in US Government Document 29CFR1910.1200.

PURAFIL Environmental Systems Division

MATERIAL SAFETY DATA SHEET

1. PRODUCT AND COMPANY IDENTIFICATION

Product Name (as used on the label): Odoroxidant™ Media

Product Synonyms:
Odoroxidant™ Select Media

Supplier Name and Address:

Airepure Australia P/L
64 Geddes Street
MULGRAVE VIC 3170

Contact: 1300 886 353

2. COMPOSITION / INFORMATION ON INGREDIENTS

Preparation Chemical Nature:
The preparation is a combination of both solid base substances as well as liquid impregnants. The combined properties of the preparation are less reactive than the most reactive individual substances listed below.

COMPONENTS

Common Chemical Name	Synonyms	CAS Number	Wt %
aluminum oxide (non-fibrous)	activated aluminas; activated and amorphous aluminas	1333-84-2*	≤64
Water	dihydrogen oxide	7732-18-5	≤35
proprietary ingredient	--	--	≤24
potassium permanganate	permanganate of potash; chameleon mineral; permanganic acid, potassium salt	7722-64-7	≥8

*For TSCA inventory reporting purposes, CAS No. 1344-28-1 was assigned for all forms of aluminum oxide instead of the CAS No. 1333-84-2 as indicated above.

3. HAZARDS IDENTIFICATION

Most Important Hazards:
If crushed or handled extensively, dust may evolve and can be irritating to the eyes or respiratory tract.

Adverse Human Health Effects:
- The following medical conditions may be aggravated by exposure to the product: asthma, chronic lung disease, and skin rashes.
- If the product contacts the skin with water, it may leave a stain of insoluble products on the skin. This stain will be washed away/rubbed off over a period of time (hours to days).

Environmental Effects:
If the product is contacted by water, some of the potassium permanganate may leach out and the water may turn pink to purple in color. Sodium bisulfite will clarify the water (by chemical reduction), but will give off sulfur dioxide and should only be used in well ventilated areas. Local regulations should always be consulted and followed.

Emergency Overview:
Inhalation: Move to fresh air. If breathing difficulty occurs or persists, seek medical attention.
Skin Contact: Wash area with large quantities of water.
Eye Contact: Flush with large quantities of water. Seek medical attention.
Ingestion: Seek medical attention.

4. FIRST-AID MEASURES

First aid measures should be taken as indicated below for the following routes of exposure.

Inhalation:
Move to fresh air. If breathing difficulty occurs or persists, seek medical attention.
Skin Contact: Wash area with large quantities of water.
Eye Contact: Flush with large quantities of water. Seek medical attention.
Ingestion: Seek medical attention.
Notes to Physician:
Product is expected to be non-toxic and is classified as an eye irritant in the powder form. Treatment is recommended to be symptomatic and supportive.

5. FIRE-FIGHTING MEASURES

Suitable Extinguishing Media:
The product is UL Classified Class 1 (when clean does not contribute fuel when attacked by flame and emits only negligible amounts of smoke). Use fire fighting measures that suit the environment.

Specific Hazards:
When involved in a fire, the dilute potassium permanganate may liberate corrosive fumes.

Protection of Firefighters:
Fire fighters should wear NIOSH approved, positive pressure, self-contained breathing apparatus and full protective clothing.

6. ACCIDENTAL RELEASE MEASURES

Personal Precautions:
Protective clothing appropriate for the environment should be worn. Goggles or safety glasses with side shields, NIOSH approved dust masks, rubber or plastic gloves, and full cover clothing covering arms and legs are recommended.

Environmental Precautions:
See section **3. HAZARDS IDENTIFICATION, Environmental Effects.**

Methods for Cleaning Up:
Clean up using dry procedures (broom, shovel, etc.); avoid dusting.

Recovery:
Product may be recovered for use if it has not come in contact with liquid, changed color, or been exposed to significant amounts of gaseous contaminants.
Neutralization:
See section **3. HAZARDS IDENTIFICATION, Environmental Effects.**
Disposal: See section **13. DISPOSAL CONSIDERATIONS.**

7. HANDLING AND STORAGE

Handling:
Use air conveying (vacuum) for bulk removal. If manual handling is used for transfer (from vessel, slingbags, boxes, or pails), use mechanical ventilation or other measures to remove airborne dust.

Technical Measures:
The following precautions should be taken when handling the product.

Prevention of User Exposure:
Goggles or safety glasses with side shields are recommended.
NIOSH approved dust masks are recommended.
Rubber or plastic gloves are recommended.
Full cover clothing covering arms and legs is recommended.

Precautions for Safe Handling:
- Avoid crushing the product to keep dusting to a minimum. As described under **Handling** above, mechanical ventilation or other measures may be needed to remove airborne dust.
- Protect from water and exposure to contaminated air (gaseous, particulate, and aerosol contaminated), otherwise the product may be rendered useless.

Storage:
General good storage practices should be followed.

Storage Conditions:
The following storage conditions should be maintained.

Suitable Conditions:
Store in a cool, dry area and keep in original, closed containers.

Incompatible Products:
Product should be kept protected from water and exposure to contaminated air (gaseous, particulate, and aerosol contaminated), otherwise the product may be rendered useless.

Packaging Materials:
The following materials are used and should be used for packaging of the product. These are intended to keep contaminants away from the product.

Recommended Materials:
- Corrugated boxes of 350 lb, double wall quality, with 4 mm plastic liners.
- Injection molded, polystyrene pails and lids including a neoprene seal.

Not Suitable Materials:
Porous materials allowing contact with water, air, and the contaminants contained therein.

8. EXPOSURE CONTROLS / PERSONAL PROTECTION

Engineering Measures:
Minimize eye and skin contact by using appropriate protective equipment. Use local or general room ventilation to control airborne dust that may be generated.

Personal Protective Equipment:
The following recommendations are made for appropriate personal protective equipment for the following.

Respiratory Protection: NIOSH approved dust mask
Hand Protection: Rubber or plastic gloves
Eye Protection: Goggles or safety glasses with side shields
Skin and Body Protection: Full cover clothing covering arms and legs.
Hygiene Measures: Do not inhale dust and avoid contact with eyes.

9. PHYSICAL AND CHEMICAL PROPERTIES

Physical State: Solid
Form: Spherical pellets approximately 1.5 – 6.4 mm (1/16 – 1/4 in.) in diameter
Color: Purple
Odor: No significant odor
Ph: Not relevant
Temperature of Physical State Change: Not relevant
Flashpoint: Not relevant
Bulk Density: 0.800 g/cc (50 lb/ft^3)
Solubility: Partially soluble in water. Will dissolve in concentrated acids and alkalis.

10. STABILITY AND REACTIVITY

Stability: Stable under normal conditions
Hazardous Reactions:
Reactions with gaseous hydrogen chloride or vinyl chloride may produce chlorine. For these applications, the media should be combined with other media for the removal of chlorine gas.

Materials to Avoid:
Protect from water and exposure to contaminated air (gaseous, particulate, and aerosol contaminated), otherwise the product may be rendered useless.

Hazardous Decomposition Products:
When involved in a fire, the dilute potassium permanganate may liberate corrosive fumes.

Intended Use and Foreseeable Misuse:
Intended use is for air purification from gaseous contaminants. The product is not intended to remove dangerous particulates or biological contaminants. Other media/systems would be required for those. The product is not intended to purify water.

11. TOXICOLOGICAL INFORMATION

Acute Toxicity: Expected to be non-toxic[1], not tested
Local Effects:
See section **3. HAZARDS IDENTIFICATION, Adverse Human Health Effects.**

Sensitization:
Primary skin irritation and corrosivity (rabbits): expected to be non-irritant[1], not tested
Eye irritation (rabbits): irritant[1]

Primary Route of Entry: Inhalation, ingestion, skin contact, eye contact

12. ECOLOGICAL INFORMATION

Not determined. See Section **3. HAZARDS IDENTIFICATION, Environmental Effects.**

13. DISPOSAL CONSIDERATIONS

Waste From Residues:
New product (media) can generally be disposed of in a landfill. Spent media that has removed toxic chemicals should be examined for specific hazards. Local regulations should always be consulted and followed.

Contaminated Packaging: Not relevant

14. TRANSPORT INFORMATION

International Regulations: Not Applicable
Proper Shipping Name: Not Applicable

15. REGULATORY INFORMATION

Regulations:
This section contains information specifically applicable to the chemical product relative to the following regulations. Local regulations should always be consulted and followed.

SARA Title III (Superfund Amendments and Reauthorization Act)

Section 302 Extremely Hazardous Substances (40CFR355): Not listed

Section 312 Hazard Categories (40CFR370.2):
Only expected as Acute (eye irritant), see section **11 TOXICOLOGICAL INFORMATION.**

Section 313 Reportable Ingredients (40CFR372):
The potassium permanganate portion of the media contains a high percentage (~97%) Manganese Compound as a part of the chemical structure (manganese compounds CAS Reg. No. N/A) and is subject to the reporting requirements of Section 313 of Title III, Superfund Amendments and Reauthorization Act of 1986 and 40CFR372.

16. OTHER INFORMATION

Disclaimer:
The information contained herein is accurate to the best of our knowledge. We do not suggest or guarantee that any hazards listed herein are the only ones, which exist. Purafil, Inc. makes no warranty of any kind, express or implied, concerning the safe use of this material in your process or in combination with other substances. Effects can be aggravated by other materials and/or this material may aggravate or add to the effects of other materials. The user has sole responsibility to determine the suitability of the material for any use and the manner of use contemplated.

[1] According to methods described in US Government Document 29CFR1910.1200.

PURAFIL Environmental Systems Division

MATERIAL SAFETY DATA SHEET

1. PRODUCT AND COMPANY IDENTIFICATION

Product Name (as used on the label): Odormix™ Media

Supplier Name and Address:

Airepure Australia P/L
64 Geddes Street
MULGRAVE VIC 3170

Contact: 1300 886 353

2. COMPOSITION / INFORMATION ON INGREDIENTS

Preparation Chemical Nature:
The preparation is a combination of both solid base substances as well as liquid impregnants. The combined properties of the preparation are less reactive than the most reactive individual substances listed below.

COMPONENTS

Common Chemical Name	Synonyms	CAS Number	Wt %
aluminum oxide (non-fibrous)	activated aluminas; activated and amorphous aluminas	1333-84-2*	≤40
activated carbon	carbon; carbon, activated	7440-44-0	≥32
Water	dihydrogen oxide	7732-18-5	≤24
proprietary ingredient	--	--	≤15
potassium permanganate	permanganate of potash; chameleon mineral; permanganic acid, potassium salt	7722-64-7	≥5
Ash	--	--	≥5

*For TSCA inventory reporting purposes, CAS No. 1344-28-1 was assigned for all forms of aluminum oxide instead of the CAS No. 1333-84-2 as indicated above.

3. HAZARDS IDENTIFICATION

Most Important Hazards:

- If crushed or handled extensively, dust may evolve and can be irritating to the eyes or respiratory tract.
- Wet activated carbon removes oxygen from the air causing severe hazards for workers in enclosed spaces. The product is by no means 100% activated carbon, but it may have the potential to act as described above. Before entering such an area, sampling and work procedures for low oxygen levels should be taken to ensure ample oxygen availability, observing all local, state, and federal regulations.

Adverse Human Health Effects:

- The following medical conditions may be aggravated by exposure to the product: asthma, chronic lung disease, and skin rashes.
- If the product contacts the skin with water, it may leave a stain of insoluble products on the skin. This stain will be washed away/rubbed off over a period of time (hours to days).

Environmental Effects:

If the product is contacted by water, some of the potassium permanganate may leach out and the water may turn pink to purple in color. Sodium bisulfite will clarify the water (by chemical reduction), but will give off sulfur dioxide and should only be used in well ventilated areas. Local regulations should always be consulted and followed.

Emergency Overview:

Inhalation: Move to fresh air. If breathing difficulty occurs or persists, seek medical attention.
Skin Contact: Wash area with soap and water.
Eye Contact: Flush with large quantities of water for 15 minutes. Seek medical attention.
Ingestion: Seek medical attention.

4. FIRST-AID MEASURES

First aid measures should be taken as indicated below for the following routes of exposure.

Inhalation:

Move to fresh air. If breathing difficulty occurs or persists, seek medical attention.
Skin Contact: Wash area with soap and water.
Eye Contact: Flush with large quantities of water for 15 minutes. Seek medical attention.
Ingestion: Seek medical attention.
Notes to Physician:
Product is expected to be non-toxic and only an eye irritant in the powder form. Treatment is recommended to be symptomatic and supportive.

5. FIRE-FIGHTING MEASURES

Suitable Extinguishing Media:
The product is UL Classified Class 1 (when clean does not contribute fuel when attacked by flame and emits only negligible amounts of smoke). Use fire fighting measures that suit the environment.

Specific Hazards:
When involved in a fire, the dilute potassium permanganate may liberate corrosive fumes and the solid base materials may liberate carbon monoxide.

Protection of Firefighters:
Fire fighters should wear NIOSH approved, positive pressure, self-contained breathing apparatus and full protective clothing.

6. ACCIDENTAL RELEASE MEASURES

Personal Precautions:
Protective clothing appropriate for the environment should be worn. Goggles or safety glasses with side shields, NIOSH approved dust masks, rubber or plastic gloves, and full cover clothing covering arms and legs are recommended.

Environmental Precautions:
See section **3. HAZARDS IDENTIFICATION, Environmental Effects.**

Methods for Cleaning Up:
Clean up using dry procedures (broom, shovel, etc.); avoid dusting.

Recovery:
Product may be recovered for use if it has not come in contact with liquid, changed color, or been exposed to significant amounts of gaseous contaminants.

Neutralization:
See section **3. HAZARDS IDENTIFICATION, Environmental Effects.**

Disposal: See section **13. DISPOSAL CONSIDERATIONS.**

7. HANDLING AND STORAGE

Handling:
Use air conveying (vacuum) for bulk removal. If manual handling is used for transfer (from vessel, slingbags, boxes, or pails), use mechanical ventilation or other measures to remove airborne dust.

Technical Measures:
The following precautions should be taken when handling the product.

Prevention of User Exposure:
Goggles or safety glasses with side shields are recommended.
NIOSH approved dust masks are recommended.
Rubber or plastic gloves are recommended.
Full cover clothing covering arms and legs is recommended.

Precautions for Safe Handling:

- Wet activated carbon removes oxygen from the air causing severe hazards for workers in enclosed spaces. The product is by no means 100% activated carbon, but it may have the potential to act as described above. Before entering such an area, sampling and work procedures for low oxygen levels should be taken to ensure ample oxygen availability, observing all local, state, and federal regulations.
- Avoid crushing the product to keep dusting to a minimum. As described under **Handling** above, mechanical ventilation or other measures may be needed to remove airborne dust.
- Protect from water and exposure to contaminated air (gaseous, particulate, and aerosol contaminated), otherwise the product may be rendered useless.

Safe Handling Advice:
Contact with strong oxidizers such as ozone, liquid oxygen, chlorine, permanganates, peroxides, etc. may result in generation of heat.

Storage:
General good storage practices should be followed.

Storage Conditions:
The following storage conditions should be maintained.

Suitable Conditions:
Store in a cool, dry area and keep in original, closed containers.

Incompatible Products:

- Product should be kept protected from water and exposure to contaminated air (gaseous, particulate, and aerosol contaminated), otherwise the product may be rendered useless.
- Contact with strong oxidizers such as ozone, liquid oxygen, chlorine, permanganates, peroxides, etc. may result in generation of heat.

Packaging Materials:
The following materials are used and should be used for packaging of the product. These are intended to keep contaminants away from the product.

Recommended Materials:

- Corrugated boxes of 350 lb, double wall quality, with 4 mm plastic liners.
- Injection molded, polystyrene pails and lids including a neoprene seal.

Not Suitable Materials:
Porous materials allowing contact with water, air, and the contaminants contained therein.

8. EXPOSURE CONTROLS / PERSONAL PROTECTION

Engineering Measures:
Minimize eye and skin contact by using appropriate protective equipment. Use local or general room ventilation to control airborne dust that may be generated.

Personal Protective Equipment:
The following recommendations are made for appropriate personal protective equipment for the following.

Respiratory Protection: NIOSH approved dust mask
Hand Protection: Rubber or plastic gloves
Eye Protection: Goggles or safety glasses with side shields
Skin and Body Protection: Full cover clothing covering arms and legs.
Hygiene Measures: Do not inhale dust and avoid contact with eyes.

9. PHYSICAL AND CHEMICAL PROPERTIES

Physical State: Solid
Form:
Spherical and cylindrical pellets approximately 1.5 – 6.4 mm (1/16 – 1/4 in.) in diameter
Color: Purple and black
Odor: No significant odor
PH: Not relevant
Temperature of Physical State Change: Not relevant
Flashpoint: Not relevant
Bulk Density: 0.640 g/cc (40 lb/ft^3)
Solubility: Partially soluble in water and more soluble in concentrated acids and alkalies

10. STABILITY AND REACTIVITY

Stability: Stable under normal conditions
Hazardous Reactions: None known
Materials to Avoid:

- Protect from water and exposure to contaminated air (gaseous, particulate, and aerosol contaminated), otherwise the product may be rendered useless.
- Contact with strong oxidizers such as ozone, liquid oxygen, chlorine, permanganates, peroxides, etc. may result in generation of heat.

Hazardous Decomposition Products:
When involved in a fire, the dilute potassium permanganate may liberate corrosive fumes and the solid base materials may liberate carbon monoxide.

Intended Use and Foreseeable Misuse:
Intended use is for air purification from gaseous contaminants. The product is not intended to remove dangerous particulates or biological contaminants. Other media/systems would be required for those. The product is not intended to purify water.

11. TOXICOLOGICAL INFORMATION

Acute Toxicity: Expected to be non-toxic[1], not tested
Local Effects:
See section **3. HAZARDS IDENTIFICATION, Adverse Human Health Effects.**

Sensitization:
Primary skin irritation and corrosivity (rabbits): expected to be non-irritant[1], not tested
Eye irritation (rabbits): irritant[1]

Primary Route of Entry: Inhalation, ingestion, skin contact, eye contact

12. ECOLOGICAL INFORMATION

Not determined. See Section **3. HAZARDS IDENTIFICATION, Environmental Effects.**

13. DISPOSAL CONSIDERATIONS

Waste From Residues:
New product (media) can generally be disposed of in a landfill. Spent media that has removed toxic chemicals should be examined for specific hazards. Local regulations should always be consulted and followed.

Contaminated Packaging: Not relevant

14. TRANSPORT INFORMATION

International Regulations: Not Applicable
Proper Shipping Name: Not applicable

15. REGULATORY INFORMATION

Regulations:
This section contains information specifically applicable to the chemical product relative to the following regulations. Local regulations should always be consulted and followed.

SARA Title III (Superfund Amendments and Reauthorization Act)

Section 302 Extremely Hazardous Substances (40CFR355): Not listed

Section 312 Hazard Categories (40CFR370.2):
Only expected as Acute (eye irritant), see section **11 TOXICOLOGICAL INFORMATION**

Section 313 Reportable Ingredients (40CFR372):
The potassium permanganate portion of the media contains a high percentage (~97%) Manganese Compound as a part of the chemical structure (manganese compounds CAS Reg. No. N/A) and is subject to the reporting requirements of Section 313 of Title III, Superfund Amendments and Reauthorization Act of 1986 and 40CFR372.

16. OTHER INFORMATION

Disclaimer:
The information contained herein is accurate to the best of our knowledge. We do not suggest or guarantee that any hazards listed herein are the only ones, which exist. Purafil, Inc. makes no warranty of any kind, express or implied, concerning the safe use of this material in your process or in combination with other substances. Effects can be aggravated by other materials and/or this material may aggravate or add to the effects of other materials. The user has sole responsibility to determine the suitability of the material for any use and the manner of use contemplated.

[1] According to methods described in US Government Document 29CFR1910.1200.

Appendix D: Manufacturers Information.

No.if applicable	*Description*
	Blower – CAV Series
	VSD Drive – Danfoss model VLT - 6004
	Rittal Enclosure Model No. 1057600

© Airepure Australia Pty. Ltd.

Performance & Dimensions

Niche CAV200 Utility Blower

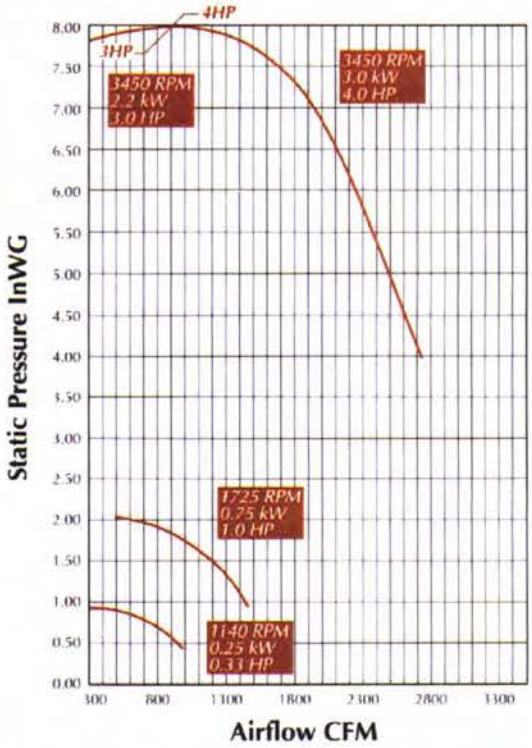

Dimensional Data

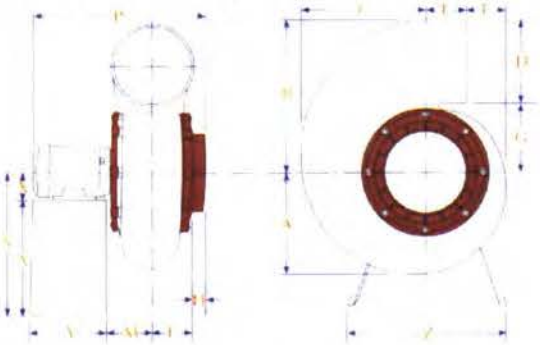

A 9.92	F 3.68	P 16.25
B 14.6	G 6.6	Y 6.0
C 12.4	H 1.4	Z 11.5
D 8.0	L 3.8	X 14.75
E 4.12	M 4.2	X_1 3.25
		X_2 20.75

All dimensions in inches

Dimensional Data Roof Unit

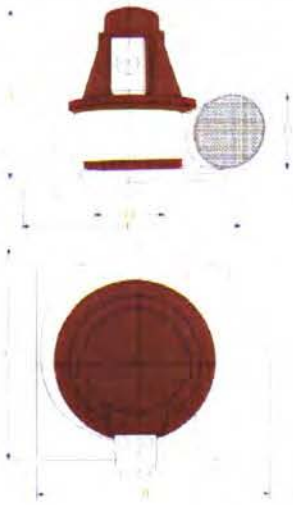

A 20.0
B 25.6
C 23.6
D 8.0
E 21.9 x 21.9 (inside)

All dimensions in inches

Notes

- Dimensions for P, X, and X_2 will vary depending upon motor selection.
- For ***Weather Protection*** see accessory "Enclosed Pedestal". *pictured at right*

FanAm, Inc.
2235 6th Street
Sarasota, FL 34237
Tel. (941) 955-9788
Toll Free. (800)838-4074
Fax. (941) 955-9733
Email: info@fanam.com
Web: www.fanam.com

Corrosive Air Ventilators
CAV Series
Utility Blowers and Roof Units
FanAm, Inc.

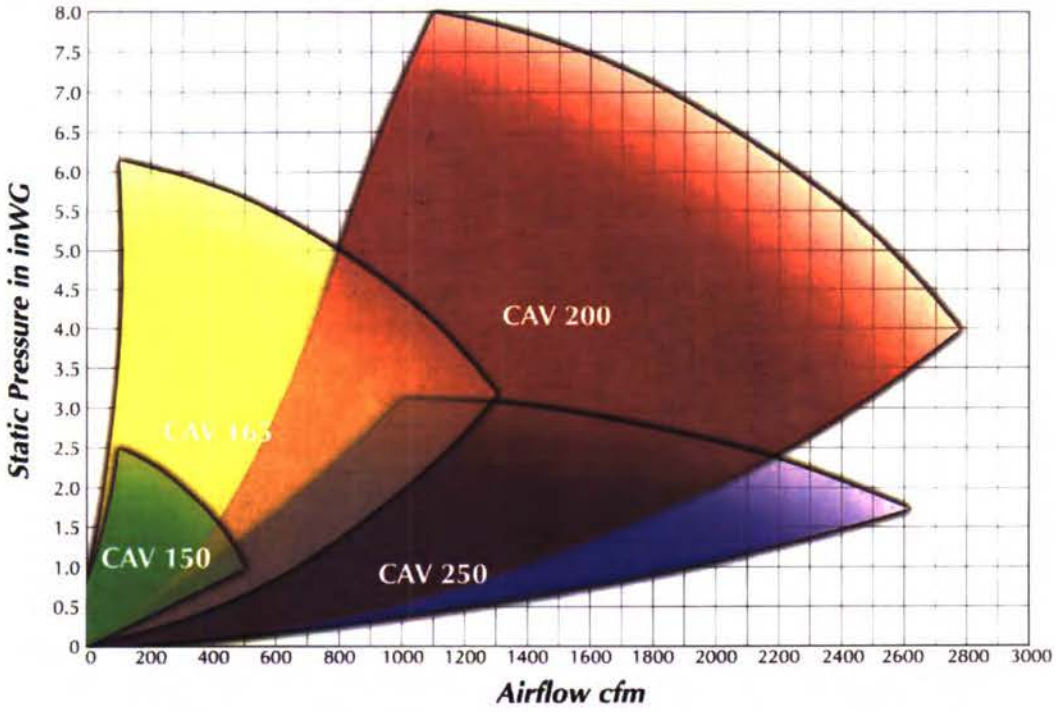
Static Pressure in inWG
8.0
7.5
7.0
6.5
6.0
5.5
5.0
4.5
4.0
3.5
3.0
2.5
2.0
1.5
1.0
0.5
0
0
200
400
600
800
1000
1200
1400
1600
1800
2000
2200
2400
2600
2800
3000
Airflow cfm
CAV 200
CAV 165
CAV 150
CAV 250

CORROSIVE AIR VENTILATOR

CAV Series Fans

The CAV Series is designed to work in corrosive air applications and is built with a combination of features to provide optimum protection for all exposed parts in the air stream. The CAV is shipped fully assembled for ease of installation. The Housings are fabricated from strong high density roto-molded polypropylene for complete corrosion protection. The inlet and outlet are designed for easy duct installation. The Impellers and Motor Shaft Bushings are constructed of injection molded polypropylene. Impellers are both electronically and dynamically balanced for best performance. The Shaft Hub Cap provides minimal exposure to the motor shaft portion extended into the air stream.

Motors

The motors are mounted outside the air stream for maximum protection from dirty air. Ball bearings are sealed and permanently lubricated, providing for a long life and maintenance free operation. Stainless steel shafts are standard on some models with 115/208-240VAC/1/60Hz. Other motor options are available in 3 phase and optional Explosion-Proof motors. For other special requirements, contact Fan America, Inc. (See performance charts).

Environmental

Environmental operation, for polypropylene casing recommended up to 165°F (70°C).

Motor Support Stand

The Motor Support Stand provides rigid support for the motor and fan housing assembly. The stand is made of galvanized sheet steel and painted for extra protection. See accessories for optional polypropylene motor protection Pedestal Stand.

Accessories

Accessories are fabricated from corrosive resistant materials and include a variety of dampers, guards, connectors and etc.

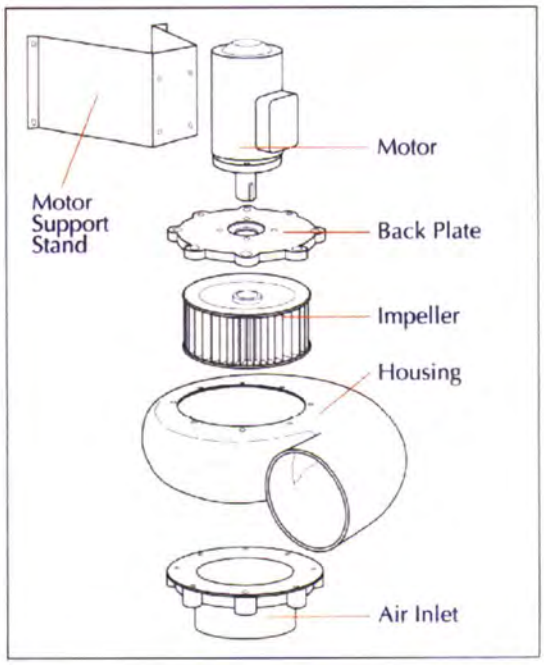

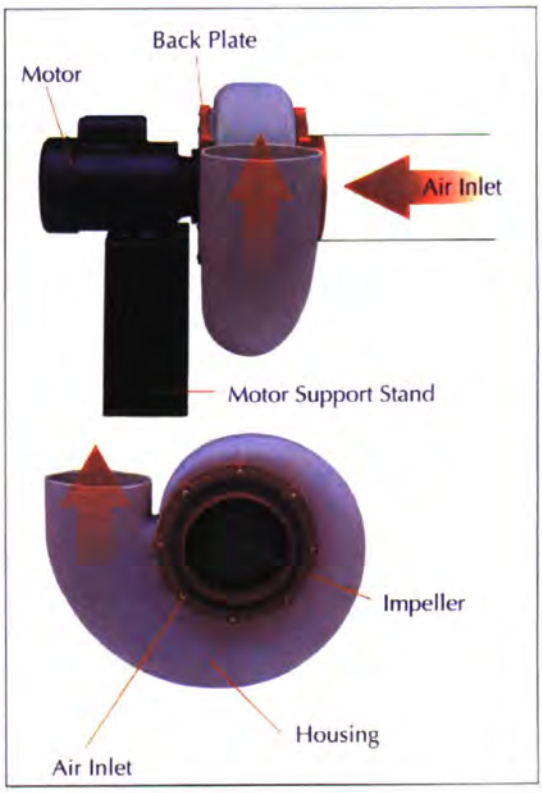

Suitable for many applications...

- Plating
- Anodizing
- Fume Handling
- Lab Hood Exhaust
- Commercial Dishwasher Exhaust
- Equipment Room Exhaust or Supply
- Equipment Ventilation or Cooling

SUBMITTAL DATA – CAV SERIES

Description

Centrifugal type ventilators suitable for operation in corrosive applications including plating, anodizing, fume handling, lab hood exhaust, commercial washer/scrubber exhaust, etc. All structural parts are made of polypropylene and mounting hardware is stainless steel. CAV units are shipped assembled and may be adjusted to any of 8 standard discharge positions. CAV units can be supplied with optional equipment including explosion proof motors for Class 1 Group D atmospheres, corrosive resistant accessories, single and 3 phase power, as well as various RPM motors.

Specifications

Supply, exhaust or return air fans shall be of the direct drive utility fan type, AMCA arrangement 4 with single width, single inlet housing in CCW rotation as specified. CW rotation may be available in some models.

Construction

Housing shall be constructed of strong high density polypropylene with no air leakage and shall be field rotatable to any of the 8 standard discharge positions. Motor support stand shall be constructed of 14 gauge galvanized steel with painted finish and added foot support to prevent vibration and rigidly support motor and wheel operation. All fan mounting hardware shall be stainless steel. Optional motor support stand constructed of polypropylene shall be provided as specified. Fan wheel shall be forward curved type and constructed of polypropylene with uniformly molded blades. Fan wheel shall be suitable for RPM of up to 3450, on models CAV 150, 165, and 200, and up to 1725 on model CAV 250. The fan wheel shall be supplied with a motor shaft bushing and hub cap constructed of polypropylene. Wheels shall be electronically and dynamically balanced. Wheel inlet and housing inlet cone shall be carefully matched for maximum performance and operating efficiency.

The motor shall be of heavy duty ball bearing type rated for continuous duty with voltage as specified. Models may be specified with stainless steel shaft. Motors are to be totally enclosed fan cooled (TEFC) with auto Thermal Overload Protection (TOP) unless otherwise specified. Motor horsepower shall be matched to the fan load. Motor shall be UL or CSA listed for safety. Motor supplied shall be of the high efficiency explosion proof type when specified.

Performance

Fan performance shall be based on tests conducted in accordance with AMCA standard 210-85.

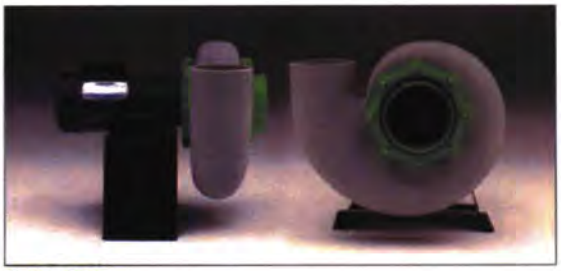

CAV 150

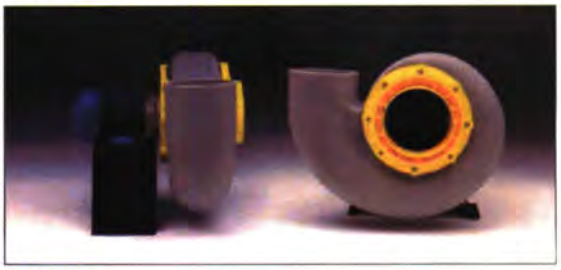

CAV 165

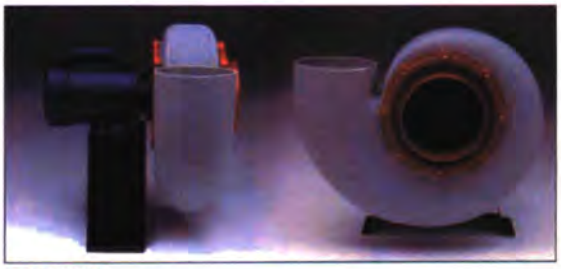

CAV 200

CAV 250

Niche CAV Series Fans shall be manufactured under the authority of Fan America, Inc., Sarasota, Florida.

PROJECT										ARCHITECT
CONTRACTOR		DATE	SUBMITTED BY							ENGINEER
SPECIFICATION										
FAN POS.	MODEL NO.	CFM	IN. WG.	RPM	WATTS / HP	AMPS	DB(A)	SONES	QTY.	OPTIONAL EQUIPMENT

WARNING! DO NOT use in **HAZARDOUS ENVIRONMENTS** where fan's electrical system could provide ignition to combustible or flammable materials unless it is specifically built for hazardous environments. FAN AMERICA, INC. reserves the right to substitute material or change product specification.

Table of contents

page

1.0 System Overview 3
2.0 Components of Odour Control Systems 4
2.1.1 Odour Control Vessel (Drum) 4
2.1.2 Odour Control Blower 5
2.1.3 Odour Control System Pipe work 5
3.0 Control & Operation 5
3.1 System Control 5
4.0 System Maintenance 6
4.1 Media Sampling & Replacement 7
4.1.1 Media Sampling 7
4.1.2 Media Replacement 7
4.2 Media Disposal 8
4.3 Exhaust Fan Maintenance 8
Appendix A: Purafil Literature DS-1000 9
Appendix B: Drawings 10
Appendix C: Material Safety Data Sheets 11
Appendix D: Manufacturers Information 12

Airepure Australia Pty. Ltd.
ABN 16 085 671 129
www.airepure.com.au

Telephone: +61 1300 886 353 Email: info@airepure.com.au

© Airepure Australia
This document is and shall remain the property of Airepure Australia Pty. Ltd. This document may only be used for the purposes for which is has been commissioned and in accordance with the terms of engagement for the commission.

Unauthorised use of this document, or any part of this document, in whatever form is strictly prohibited.

Document Register

Rev	Status/Comments	Author	Reviewed	Approval		
				Name	Signature	Date
A	Final Draft	J McIntosh	J McIntosh	J McIntosh		4/05

++ Denotes original document signed.

Client Acceptance

Leighton Contractors Pty Ltd.			/ /04

1.0 System Overview

This document provides a general description of the operational and maintenance activities associated with the odour control system installed at Serpentine Road, Pinkenba site comprising the Australia Trade Coast Sewer Project. Drawings and relevant manufacturer's manuals have also been provided in the appendices providing more detailed information in relation to this installation.

The odour control unit at this site is an active type odour control system. This system is designed to clean odorous air using a Purafil ® DS-1000 drum scrubber coupled with a particulate filter, that has an inlet and outlet pipe, mechanical blower (exhaust fan), a media bed housed in a HDPE drum, and diffuser. This drum scrubber is designed to exhaust recycled air. The drum scrubber is supplied with Purafil ® Odoroxidant, Odorcarb II and Odormix media's. A blower (exhaust fan) fitted to the lid, draws the air from the odour control drum. The air is then discharged, to atmosphere, via an outlet duct section fitted to the blower section. The speed of the blower is controlled via a VSD (Variable Speed Drive), which has been supplied for this site.

© Airepure Australia Pty. Ltd.

2.0 Components of Odour Control Systems

The following sections provide an overview of the main components that make up the odour control system.

2.1.1 Odour Control Vessel (Drum)

The main component of the odour control system is the DS-1000 Drum Canister (or Scrubber). Each drum scrubber consists of a polyethylene drum measuring 1,524 mm in height and 1,321 mm in diameter. The drum is fitted with a 254 mm inlet flexible connection. Connection to the inlet is via a 254 mm slip on "FERNCO" connector. The drum is also fitted with two sample ports to allow media samples to be taken and a drain valve is fitted at the base of each drum for maintenance purposed.

Figure 2.1.1 Odour control system canister.

The vessel is filled with 183 kg's PURAFIL ODOROXIDANT, 431's kg of PURAFIL ODORCARB II ® and 183 kg of PURAFIL ODORMIX SELECT 1/16 ® as well as other various poly-media filters, which are used to contain any media dust that may be generated.

Details of the media are provided in Appendix D in the form of Materials Safety Data Sheets.

The vessel is finished in black Polyethylene.

© Airepure Australia Pty. Ltd.

2.1.2 Odour Control Blower

A mechanical centrifugal blower, fabricated from strong high density polypropylene, is used to draw sewer gases through the media bed of the drum scrubber. The details of the blower for this site are provided in the table below.

Table 2.1.2 - Blower Details

Item	Detail
Impeller type	Centrifugal
Fan type	Niche CAV200, Centrifugal SWSI, Laminar impeller fan
Volume (l/s)	Max. 480 l/sec
Static Pressure (pa)	750
Fan speed (rpm)	2880
Sound Pressure (dBA)	64 @ 3m
Motor Power (kW)	2 Pole, 2.2
Electrical supply	415V, 3 phase, 50Hz

Blower control (speed) is maintained at the required airflow via a Variable Speed Drive, which is installed in a cabinet close to the unit on site.

2.1.3 Odour Control System Pipe work

Interconnecting SWJ (Solvent Weld Joint) ABS pipe work and fittings are used to connect the various components of the proposed odour control system.

A single 250mm ABS run exists from the wet well directly to the odour control unit located above ground level. An isolation damper is fitted within this duct run for purposes of servicing and a method of shut-off to the wet well if required.

3.0 Control & Operation

The following sections provide an overview of the control employed at this site.

3.1 System Control

The odour control system employed at this site is an active (force ventilated) type odour control system comprising a centrifugal blower and VSD drive. Following is the set control system requirements

- The VF Drive will operate continuously.

© Airepure Australia Pty. Ltd.

Appendix D: Manufacturers Information.

No.if applicable	*Description*
	Blower – CAV Series
	VSD Drive – Danfoss model VLT - 6004
	Rittal Enclosure Model No. 1057600

© Airepure Australia Pty. Ltd.

Corrosive Air Ventilators
CAV Series
Utility Blowers and Roof Units
FanAm, Inc.

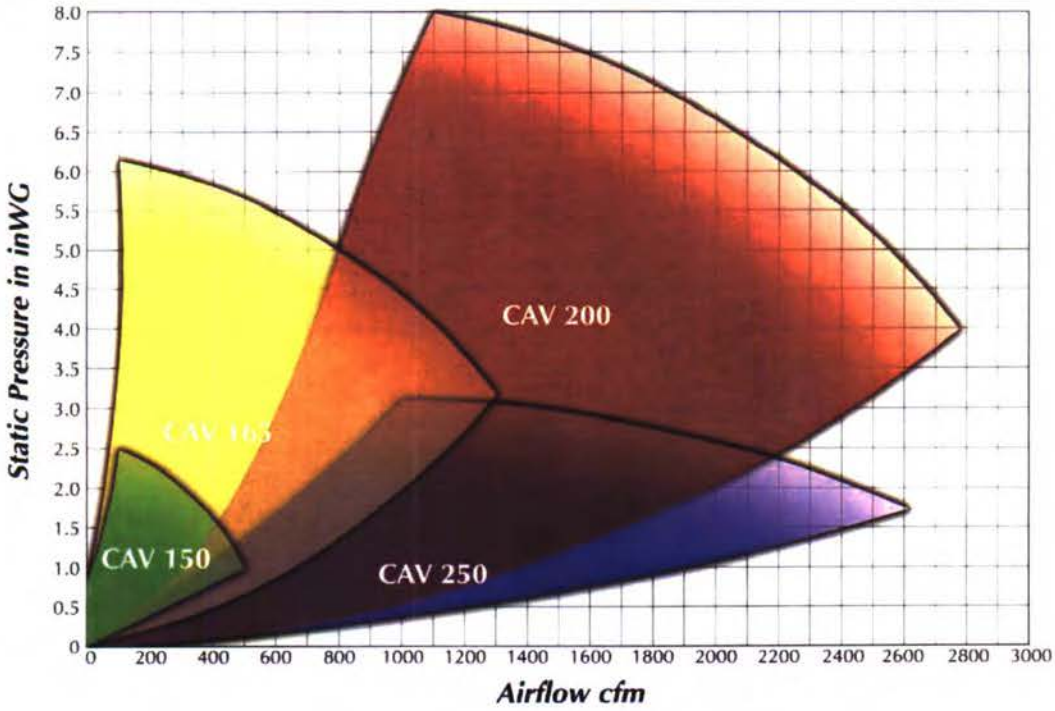
Static Pressure in inWG
8.0
7.5
7.0
6.5
6.0
5.5
5.0
4.5
4.0
3.5
3.0
2.5
2.0
1.5
1.0
0.5
0
0
200
400
600
800
1000
1200
1400
1600
1800
2000
2200
2400
2600
2800
3000
Airflow cfm
CAV 200
CAV 165
CAV 150
CAV 250

CORROSIVE AIR VENTILATOR

CAV Series Fans

The CAV Series is designed to work in corrosive air applications and is built with a combination of features to provide optimum protection for all exposed parts in the air stream. The CAV is shipped fully assembled for ease of installation. The Housings are fabricated from strong high density roto-molded polypropylene for complete corrosion protection. The inlet and outlet are designed for easy duct installation. The Impellers and Motor Shaft Bushings are constructed of injection molded polypropylene. Impellers are both electronically and dynamically balanced for best performance. The Shaft Hub Cap provides minimal exposure to the motor shaft portion extended into the air stream.

Motors

The motors are mounted outside the air stream for maximum protection from dirty air. Ball bearings are sealed and permanently lubricated, providing for a long life and maintenance free operation. Stainless steel shafts are standard on some models with 115/208-240VAC/1/60Hz. Other motor options are available in 3 phase and optional Explosion-Proof motors. For other special requirements, contact Fan America, Inc. (See performance charts).

Environmental

Environmental operation, for polypropylene casing recommended up to 165°F (70°C).

Motor Support Stand

The Motor Support Stand provides rigid support for the motor and fan housing assembly. The stand is made of galvanized sheet steel and painted for extra protection. See accessories for optional polypropylene motor protection Pedestal Stand.

Accessories

Accessories are fabricated from corrosive resistant materials and include a variety of dampers, guards, connectors and etc.

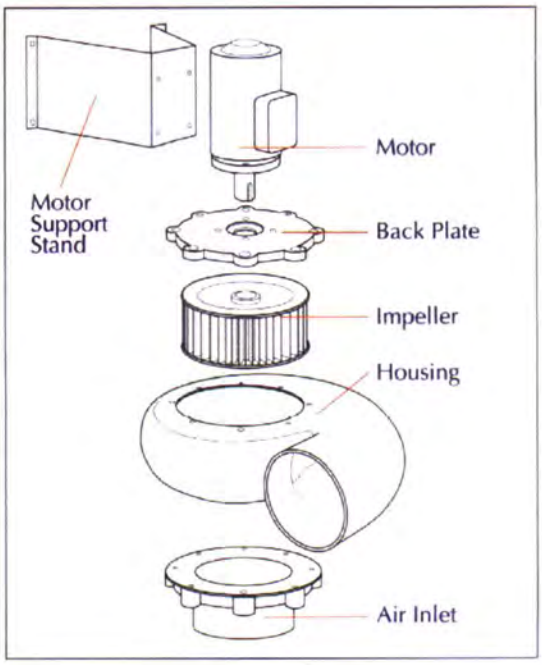

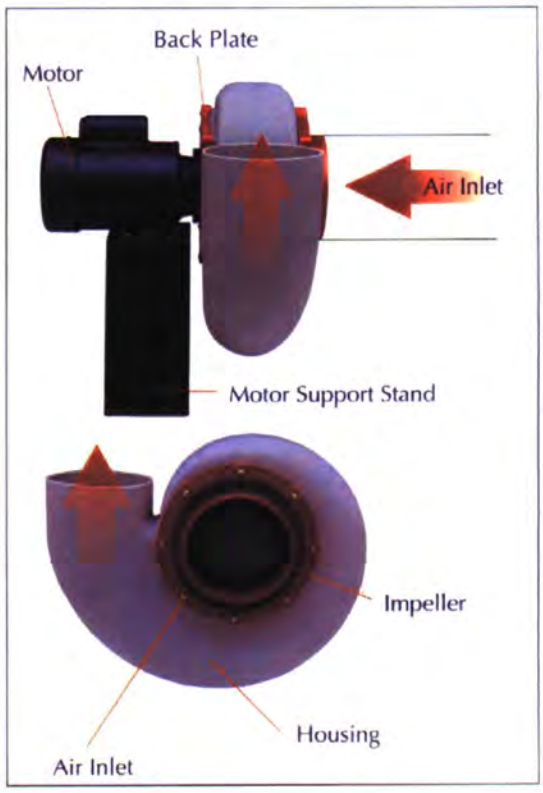

Suitable for many applications...

- Plating
- Anodizing
- Fume Handling
- Lab Hood Exhaust
- Commercial Dishwasher Exhaust
- Equipment Room Exhaust or Supply
- Equipment Ventilation or Cooling

SUBMITTAL DATA – CAV SERIES

Description

Centrifugal type ventilators suitable for operation in corrosive applications including plating, anodizing, fume handling, lab hood exhaust, commercial washer/scrubber exhaust, etc. All structural parts are made of polypropylene and mounting hardware is stainless steel. CAV units are shipped assembled and may be adjusted to any of 8 standard discharge positions. CAV units can be supplied with optional equipment including explosion proof motors for Class 1 Group D atmospheres, corrosive resistant accessories, single and 3 phase power, as well as various RPM motors.

Specifications

Supply, exhaust or return air fans shall be of the direct drive utility fan type, AMCA arrangement 4 with single width, single inlet housing in CCW rotation as specified. CW rotation may be available in some models.

Construction

Housing shall be constructed of strong high density polypropylene with no air leakage and shall be field rotatable to any of the 8 standard discharge positions. Motor support stand shall be constructed of 14 gauge galvanized steel with painted finish and added foot support to prevent vibration and rigidly support motor and wheel operation. All fan mounting hardware shall be stainless steel. Optional motor support stand constructed of polypropylene shall be provided as specified. Fan wheel shall be forward curved type and constructed of polypropylene with uniformly molded blades. Fan wheel shall be suitable for RPM of up to 3450, on models CAV 150, 165, and 200, and up to 1725 on model CAV 250. The fan wheel shall be supplied with a motor shaft bushing and hub cap constructed of polypropylene. Wheels shall be electronically and dynamically balanced. Wheel inlet and housing inlet cone shall be carefully matched for maximum performance and operating efficiency.

The motor shall be of heavy duty ball bearing type rated for continuous duty with voltage as specified. Models may be specified with stainless steel shaft. Motors are to be totally enclosed fan cooled (TEFC) with auto Thermal Overload Protection (TOP) unless otherwise specified. Motor horsepower shall be matched to the fan load. Motor shall be UL or CSA listed for safety. Motor supplied shall be of the high efficiency explosion proof type when specified.

Performance

Fan performance shall be based on tests conducted in accordance with AMCA standard 210-85.

CAV 150

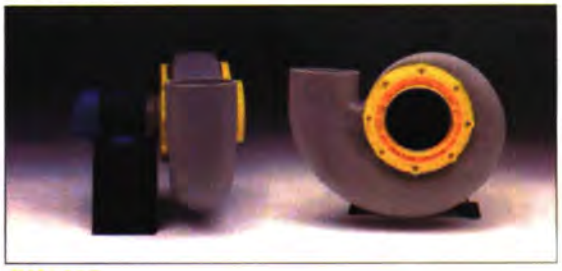

CAV 165

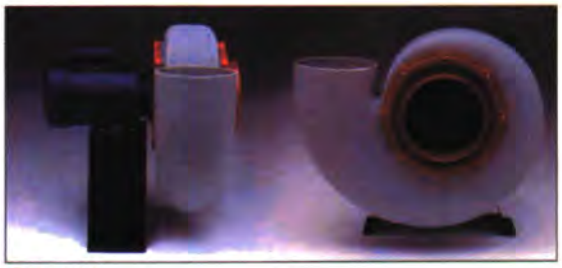

CAV 200

CAV 250

Niche CAV Series Fans shall be manufactured under the authority of Fan America, Inc., Sarasota, Florida.

PROJECT				ARCHITECT
CONTRACTOR	DATE	SUBMITTED BY		ENGINEER

SPECIFICATION

FAN POS.	MODEL NO.	CFM	IN. WG.	RPM	WATTS / HP	AMPS	DB(A)	SONES	QTY.	OPTIONAL EQUIPMENT

WARNING! DO NOT use in **HAZARDOUS ENVIRONMENTS** where fan's electrical system could provide ignition to combustible or flammable materials unless it is specifically built for hazardous environments. FAN AMERICA, INC. reserves the right to substitute material or change product specification.

Performance & Dimensions

Niche CAV200 Utility Blower

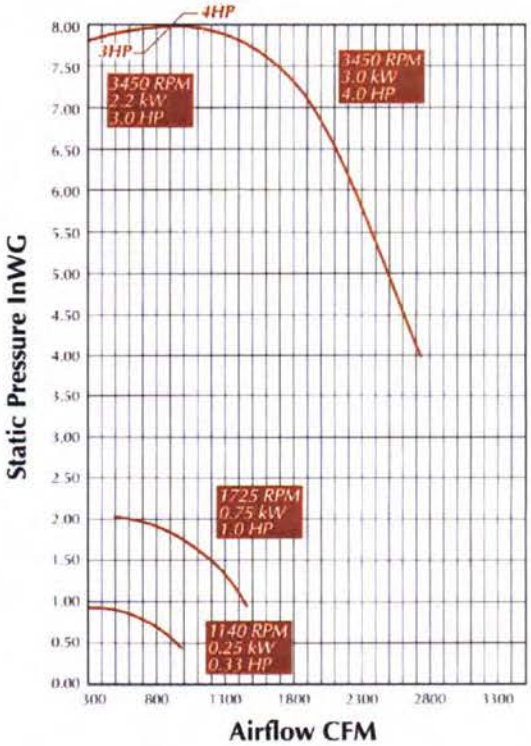

Dimensional Data

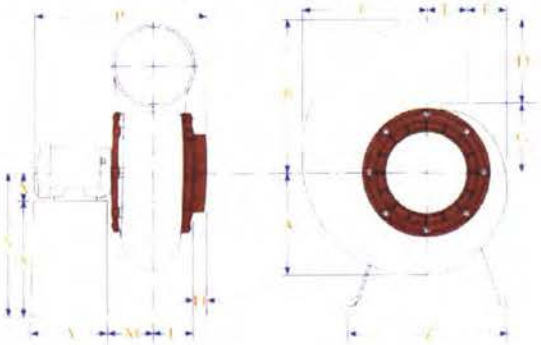

A 9.92	F 3.68	P 16.25
B 14.6	G 6.6	Y 6.0
C 12.4	H 1.4	Z 11.5
D 8.0	L 3.8	X 14.75
E 4.12	M 4.2	X_1 3.25
		X_2 20.75

All dimensions in inches

Dimensional Data Roof Unit

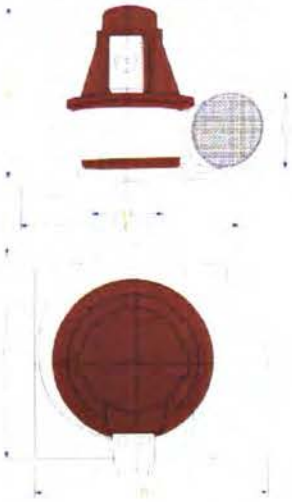

A 20.0
B 25.6
C 23.6
D 8.0
E 21.9 x 21.9 square

All dimensions in inches

Notes

- Dimensions for P, X, and X_2 will vary depending upon motor selection.
- For ***Weather Protection*** see accessory "Enclosed Pedestal". *pictured at right*

FanAm, Inc.
2235 6th Street
Sarasota, FL 34237
Tel. (941) 955-9788
Toll Free. (800)838-4074
Fax. (941) 955-9733
Email: info@fanam.com
Web: www.fanam.com

- The Drive is to receive a 4-20 mA signal from the RTU to control the speed of the blower.
- The VF Drive will provide a digital output to the RTU to indicate drive fault.
- The Drive is to run at a set minimum speed under normal operating conditions. This set speed to be adjustable in software and set during commissioning to achieve the required negative pressure in the wet well. Normal operating conditions are when the wet well level is either constant, falling or rising at a rate less that that specified below.
- The drive will run at an increased speed during periods when the wet well level is rising. The increased speed set point to be adjustable in software and set during commissioning to maintain the required negative pressure in the wet well.
- Sewage Maintenance is to specify the required rate of rise in the wet well to trigger the increased speed operation. In specifying the rate of rise, need to consider the time period between sampling of the wet well level and the required change for each sample. This needs to be averaged to filter out transient changes. NOTE: Such filtering will increase the response time before speed changed will be effected.
- There is to be no instrumentation required to monitor the negative pressure within the system.

4.0 System Maintenance

The following sections provide a guide to the minimum maintenance requirements for this system. Procedures describing the replacement of the media contained within the drum scrubber have also been provided in this section.

Please be aware of the following precautions when handling, or when being exposed to the media contained within the drum.

A well-ventilated work area is recommended for any work that is being performed on this odour control system. Dust occurs in fresh media due to handling abrasion. Workers should avoid direct inhalation of considerable Purafil ® dust, as it induces sneezing. In closed, poorly ventilated areas, the wearing of dust masks, such a 3M No.8500, is strongly recommended.

Avoid exposing the Purfail ® media to water or precipitation, as this dissolves permanganate content. Storage of the media should be in a dry place with less than 95% relative humidity. Exposure of permanganate solution to the skin causes brown staining, which is temporary but not harmful. This staining can be removed by washing in a diluted solution of water and sodium bisulfite.

If dust is exposed to the eyes or delicate membrane, flush thoroughly with water and seek treatment by a physician. Follow normal procedures for exposure to abrasive dust. The wearing of suitable eye protection is also recommended

© Airepure Australia Pty. Ltd.

4.1 Media Sampling & Replacement

Purafil ® media has a finite life which is a function of the available potassium permanganate ($KmnO_4$) expressed as a percentage.

Following start-up and during the operating life of the system, routine sampling of the media contained in the drum scrubber should be undertaken to ensure the working efficiency of the system is kept. Please note that a change in colour does not necessarily represent any change in the effectiveness of the media.

Since every site is different, due to the type and quantity level of the contaminant, operators must develop a sample schedule best suited to their system. It is however recommended that a sample be taken not long after the system has been commissioned so that the rate of delay can be established, and hence a replacement date can be projected, as well as, a recommended sample schedule.

4.1.1 Media Sampling

To take a media sample, simply utilise the media sampling ports located on the outside of the drum and insert the sampling probe into the media bed.

Open the entry port of the sampling probe, pulling up until the port cover slides open.

Close the sampling probe by pushing down and pour the contents into a plastic sample bag, which can be provided by your Airepure representative.

Seal this bag tightly and label the bag appropriately, so that it can be clearly determine from where this sample had been taken. Include the date the sample was taken.

Please note that the local Airepure representative can assist you in the undertaking of lab analysis of this media.

4.1.2 Media Replacement

Following media analysis, in determination of the condition of the media. If then, it has been determined that the media is in need of replacement then the following procedure should be followed:

PLEASE NOTE: The use of eye and dust protection (PPE) should be worn before opening the drum scrubber. It is recommended that overalls and gloves also be worm as some of the materials contained within the drum scrubber canister can leave stains that cannot be removed from clothing.

© Airepure Australia Pty. Ltd.

REMOVAL OF DRUM SCRUBBER CONTENTS

1. Electrical isolate the blower motor and tag "DO NOT OPERATE"
2. Remove drum vessel lid and blower.
3. Remove Polymedia (blue) filter.
4. Remove layer of Odormix media
5. Remove layer of Odorcarb II media.
6. Remove layer of Odoroxidant media.
7. Remove layer of Polymedia (blue) filter.

REPLACEMENT OF DRUM SCRUBBER CONTENTS

1. Install Polymedia (blue) filter
2. Install new Odoroxidant media (2 boxes)
3. Install new Odorcarb media (5 boxes)
4. Install new Odormix media (3 boxes)
5. Install top Polymedia (blue) filter
6. Replace drum vessel lid and blower
7. Return blower motor to service and remove tag.

Please refer to section 4.2 for instructions concerning the proper disposal of the old media.

4.2 Media Disposal

Purafil ® media is a non-toxic, non-flammable substance. Filtration of contaminants through Purafil ® media causes molecular changes to occur, and the resulting product is usually not harmful to the environment. Although special precautions are generally not required when disposing of spent media, government regulations may require specific disposal procedures if the resulting product could be harmful to the environment. Large quantities of Purafil media should not be disposed of in a dumper like equipment because the weight of the media cause difficulties in the handling of the dumpster.

Independent laboratory analysis for the Environmental Protection agency (EPA) toxicity characteristics may be required if the contaminates eliminated from your environment (system) include heavy metals and pesticides.

4.3 Exhaust Fan Maintenance

Routine maintenance procedures, typical of those carried out for electrical motors should be undertaken for the motor of this system. A qualified electrical trades person should only undertake this type of work.

It is recommended that the electrical motor and fan be inspected every 6 months and that routine maintenance procedures be undertaken on a 12 monthly basis.

© Airepure Australia Pty. Ltd.

IMPORTANT: The exhaust fan should be electrically isolated before attempting any routine inspection of maintenance procedures.

The exhaust fan and its associated drive components, should be inspected to ensure continually reliable and safe operation.

© Airepure Australia Pty. Ltd.

Appendix A: Purafil literature DS-1000

No.if applicable	*Description*
	Purafil ESD Drum Scrubber – 1000
	Suggested Specifications – DS-1000
	Purafil ESD's Odorcarb II Media and Specification
	Purafil ESD's Odoroxidant Media and Specification
	Purafil ESD's Odormix Media and Specification
	Service Guide Purafil Drum Scrubber

© Airepure Australia Pty. Ltd.

Purafil ESD Drum Scrubber - 1000

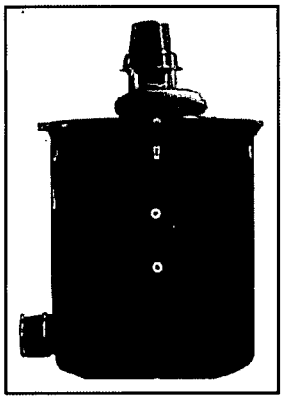

Manufactured by Purafil Environmental Systems Division (ESD), the Drum Scrubber–1000 (DS-1000) is ideal for removal of odorous gases found at pump stations, lift stations, wet wells, force mains, and even at the wastewater treatment plant. Recommended for moderate-load applications, the DS-1000 is sized for airflows up to 1000 cfm.

Construction: The DS-1000's polyethylene canister measures 52 inches (132.1 cm) in diameter, 79.5 inches (201.9 cm) in height (including blower), and 1/4-inch (6.4 mm) in thickness. The unit is mounted on a 60-inch square aluminum skid.

Media: At the core of ESD's high-efficiency odor control systems are dry-chemical air filtration medias. The DS-1000 is bulk filled with multiple layers of Odoroxidant™, Odorcarb™ II, and Odormix™ media for broad-spectrum removal of sewage odors at 99.5+% efficiencies.

Applications

- Pump Stations
- Lift Stations
- Wet Wells
- Force Mains
- Head Works
- Aerobic Digesters
- Clarifiers
- Sludge Dewatering

Targeted Odors/Gases

- Hydrogen sulfide
- Ammonia
- Aldehydes
- Sulfur dioxide
- Mercaptans
- Organic compound

System Advantages

Corrosion-Resistant Housing: The DS-1000 is constructed of corrosion-resistant materials and requires essentially no maintenance, making it ideal for remote, outdoor applications or areas where high levels of acid gases are present.

Low Maintenance: The DS-1000 has only one moving part—a blower. Other than routine service checks, no maintenance is required to ensure maximum scrubber performance. The expected service life of the DS-1000 is nine months to one year, depending on the contaminant level.

Complete Gas Removal: Purafil ESD's Odoroxidant, Odorcarb II, and Odormix media offer broad-spectrum removal of sewage odors. By using these media in combination, users are assured of complete odor control.

Media Sampling Ports: Three media sampling ports, located on the side of the DS-1000, allow for easy access to the media beds. Upon receiving the samples, Purafil ESD's laboratory performs a complimentary Media Life Analysis to project remaining service life. Timely replacement of spent media is critical in preventing odor breakthrough.

Local Service: Purafil ESD's network of local representatives offers convenient and timely service. These factory-trained representatives work in conjunction with ESD's in-house laboratory to provide comprehensive technical service.

Standard Features:

- Linear, low-density, polyethylene canister (¼-inch in thickness)
- Odoroxidant, Odorcarb II, and Odormix media (39 ft^3)
- Integrated motor housing
- Totally Enclosed Fan Cooled (TEFC) motor
- High-density, rotomolded, polypropylene motor/blower assembly
- Adjustable damper (PVC)
- Stainless steel and rubber latches
- Stainless steel fasteners
- Thermoplastic packing and FRP lid
- Polypropylene impellers and motor shaft bushings
- Integrated rainhood
- Fernco flexible coupling at inlet
- Polyethylene inlet (10-inch pipe diameter)
- Airflows up to 1000 cfm

Optional Features

- Other Purafil ESD media

Other System Advantages

- System media are UL Classified Class 1 and 2.
- Spent media is landfill disposable.
- Maintains superior performance in climates with fluctuating temperature and relative humidity.

PURAFIL Environmental Systems Division

2654 Weaver Way • Doraville, Georgia 30340 • Phone: (770) 662-8545 • Fax: (770) 263-6922 • www.purafil.com

SUGGESTED SPECIFICATIONS - DS-1000

DRUM SCRUBBER – 1,000 CFM

For use with drawing AW-121703 Rev. B

PURAFIL Environmental Systems Division

1. GENERAL

1.01 Intent

A. It is the intent of these Suggested Specifications to give the Contractor/Engineer the descriptions of the equipment, instructions for delivers, and installation of the Purafil Drum Scrubber-1,000cfm (DS-1000) as manufactured by Purafil, Inc. Doraville, Georgia or equal.

B. The Contractor/Engineer is advised that all drawings shall be for general reference.

C. The Contractor/Engineer shall provide all equipment and work indicated below unless otherwise noted and any additional work to produce a completely finished job as required by the Engineer.

2. PRODUCTS

2.01 General

A. This specification defines the requirements for a Drum Scrubber-1,000cfm (DS-1000) as manufactured by Purafil, Inc. Doraville, Georgia or equal.

B. The DS-1000 consists of dry scrubbing media contained in a 550-gallon, linear, low density, polyethylene drum with a blower mounted on top of a FRP lid.

C. The DS-1000 shall contain 39 ft^3 (0.96 m^3) of Odoroxidant™, Odorcarb™ II, and Odormix™ media. The DS-1000 shall contain 400 pounds (183 kg) of impregnated activated alumina, Odoroxidant media, 945 pounds (431 kg) of impregnated activated carbon, Odorcarb II Media, followed by 400 pounds (183 kg) of a 50/50 volume blend of activated carbon and active-oxidant impregnated alumina, Odormix Media, as manufactured by Purafil, Inc.

D. The DS-1000 shall be designed to operate at 99.5+% gas removal efficiencies.

E. The airflow capacity shall range from 800 cfm (1,360 m^3/hr) to 1,100 cfm (1,870 m^3/hr)

F. The configuration shall be arranged so that the contaminated air shall flow into the bottom inlet plenum and be drawn upwards through the media bed. Treated air shall discharge out the top of the vessel through a centrifugal air ventilator.

G. All components of the DS-1000 shall include:

1. 550-gallon, linear, low density, polyethylene drum and FRP lid
2. 1,745 pounds (796 kg) of dry scrubbing media
3. Polypropylene blower section with damper

2.02 Drum

A. The drum material shall be linear, low density, polyethylene, 1/4" (6.4mm) in thickness.

B. The drum shall have a capacity of 550 gallons and measure 52" (132.1 cm) in diameter and 60" (152.4 cm) in height.

C. Latches shall be stainless steel and rubber.

D. Fasteners shall be stainless steel.

E. The drum shall contain 39 ft^3 (1.10 m^3) of Odoroxidant, Odorcarb II and Odormix medias as manufactured by Purafil, Inc.

F. The drum shall be provided with two media sampling ports, each measuring one inch in diameter.

G. The media shall be supported by an FRP air diffuser and surrounded by thermoplastic packing and will contain a mist eliminator to remove moisture.

H. Polymedia filters shall be used to separate the thermoplastic packing from the Odorcarb II media, the blower from the Odormix media, and to separate the layers of media.

I. The inlet shall have a 8" (203.2 mm) FERNCO flexible coupling.

J. The drum shall have a 0.75" (19 mm) dia. drain pipe.

2.03 Blower Section

A. The blower shall be sized to deliver 1,000 cfm (1,700 m^3/hr)

B. The blower/motor shall be covered with an FRP rainhood.

C. The blower shall consist of a direct drive motor-fan assembly.

D. The motor shall be a 3.0 hp, 3450 RPM, 115/230 volt / 1 phase/ 60 Hz TEFC motor.

E. The unit comes ready to be field wired.

2.04 Chemical Media

A. The DS-1000 shall contain 8 ft^3 (0.22 m^3) of Odoroxidant media, 21 ft^3 (0.58 m^3) of Odorcarb II Media, and 10 ft^3 (0.28 m^3) Odormix Media as manufactured by Purafil, Inc.

2654 Weaver Way • Doraville,GA 30340 • (Toll-Free) 1-800-222-6367 • (Phone) 770-662-8545 • (Fax) 770-263-6922
Email:purafil@purafil.com • www.purafil.com

B. The Odoroxidant™ Media shall consist of manufactured, generally spherical, porous pellets. Pellets shall be formed from a combination of activated alumina and other binders, suitably impregnated with potassium permanganate to provide optimum adsorption, absorption, and oxidation of a wide variety of gaseous contaminants. The potassium permanganate shall be applied during pellet formation, such that the impregnant is uniformly distributed throughout the pellet volume and is totally available for reaction.

C. Odoroxidant Media shall have the following physical properties:
   1. Moisture content: 35% maximum
   2. Average crush strength: 35% minimum - 70% maximum
   3. Average abrasion: 4.5% maximum
   4. Bulk density: 50 lbs/ft^3 (800 kg/m^3)
   5. Nominal pellet diameter: 1/8" (3.2 mm)
   6. Potassium permanganate content: 8% minimum

D. Odoroxidant Media shall be UL Classified Class 1.

E. Odoroxidant Media shall be capable of absorbing and removing odorous gases throughout the entire pellet.

F. The Odorcarb™ II Media shall consist of manufactured, generally spherical porous pellets. The pellets shall be formed from a combination of powered activated carbon, alumina, and other binders suitably impregnated with chemicals to enhance the capacity for removal of odorous gases. The pellets shall also chemically react to produce solid reaction products within the media. Impregnants shall be applied during pellet formation such that the impregnant is uniformly distributed throughout the pellet volume.

G. Odorcarb II Media shall have the following physical properties:
   1. Moisture content: 35% maximum
   2. Average crush strength: 35% minimum - 70% maximum
   3. Average abrasion: 4.5 maximum
   4. Bulk density: 45 lbs/ft^3 (721 kg/m^3)
   5. Nominal pellet diameter: 1/16" – 1/8" (1.587mm)

H. Odorcarb II Media shall be UL Classified Class 2.

I. Odorcarb II Media shall be capable of absorbing and removing odorous gases throughout the entire pellet.

J. The Odormix™ Media shall consist of an equal mix (by volume) of Odoroxidant Media and Odorkol Media. Odoroxidant Media shall be manufactured of generally spherical, porous pellets formed from a combination of powdered activated alumina and other binders, suitably impregnated with potassium permanganate to provide optimum adsorption, absorption, and oxidation of a wide variety of gaseous contaminants. The potassium permanganate shall be applied during pellet formation, such as the impregnant is uniformly distributed throughout the pellet volume and is totally available for reaction. Odorkol Media shall be a premium grade, activated carbon with a high surface area available for adsorption.

K. Odormix Media shall have the following physical properties:
   1. <u>Odoroxidant Media</u>
      - Moisture content: 35% maximum
      - Average crush strength: 35% minimum - 70% maximum
      - Average abrasion: 4.5% maximum
      - Bulk density: 50 lbs/ft^3 (800 kg/m^3)
      - Nominal pellet diameter: 1/16" (1.587mm)
      - Potassium permanganate content: 8% minimum

   2. <u>Odorkol Media</u>
      - Moisture content: 5.0% maximum
      - CTC: 55 minimum
      - Base material: activated carbon
      - Bulk density: 30-32 lbs/ft^3 (480-512 kg/m^3)
      - Odormix Media shall be UL Classified Class 1.

L. ANALYTICAL SERVICES

a. Media Sampling and Analysis
   i. The manufacturer shall, after start up, shall analyze media samples to predict the remaining service life of system media. Such service will be provided as needed at the manufacturer's expense.

M. MANUFACTURER

a. Purafil, Inc.

i. The manufacturer shall have a minimum of ten (10) years experience in the design, fabrication, and testing of systems that are 99.5+% efficient at removing gaseous contaminants.

ii. The manufacturer shall be a single source provider of equipment, media, and testing services and be certified to ISO-9001 standards.

iii. The manufacturer shall have local, factory-trained representatives.

iv. The manufacturer shall be Purafil, Inc. of Doraville, Georgia.

2654 Weaver Way • Doraville,GA 30340 • (Toll-Free) 1-800-222-6367 • (Phone) 770-662-8545 • (Fax) 770-263-6922
Email:purafil@purafil.com • www.purafil.com

Purafil ESD's Odorcarb™ II Media

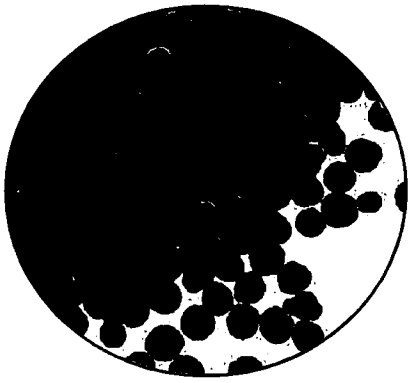

Proven Performance

Odorcarb™ II Media is highly effective at removing odorous hydrogen sulfide gas (H_2S) and is the primary media in Purafil ESD's odor control systems for wastewater treatment applications.

Characteristics

- Landfill disposable
- New and spent media is non-toxic
- UL Classified Class 2

Media

Odorcarb™ II, an activated alumina-based media shall consist of manufactured, generally spherical porous pellets measuring 1/16" to 1/8" in diameter. Pellets shall be formed from a combination of powdered activated carbon, alumina and other binders, suitably impregnated with caustic chemicals to enhance the capacity for removal of hydrogen sulfide.

Impregnants shall be applied during pellet formation, such that the impregnant is uniformly distributed throughout the volume of the pellet.

Disposal Requirements

Spent Odorcarb™ II Media should be disposed of according to local, state and federal guidelines.

The Chemisorptive Process

The chemisorptive process shall remove contaminant gases by means of adsorption, absorption, and chemical reaction. Gases shall be trapped within the pellet where an irreversible chemical reaction changes the gases into harmless solids, eliminating the possibility of desorption.

Removal Capacity

Odorcarb™ II Media shall meet the following removal capacity for hydrogen sulfide: 35.0% minimum by weight.

100 lbs (45.36 kg) of Odorcarb™ II Media shall remove a minimum of 35 lbs (15.88 kg) of hydrogen sulfide.

Physical Properties

Odorcarb™ II Media shall have the following physical properties:

- **Moisture Content:** 35% Max
- **Crush Strength:** 35% - 70% Max
- **Abrasion:** 4.5% Max
- **Bulk Density:** 45 lbs/ft³ (721 kgs/m³)
- **Pellet Diameter:** 1/16" - 1/8" (1.5 mm - 6.5mm)

Applications

Purafil ESD's Odorcarb™ II Media is ideal for use in environments requiring control of hydrogen sulfide gas, such as wastewater treatment plants, pumping stations, wet wells, lift stations and sludge holding tanks.

Application Guidelines

Odorcarb™ II Media shall perform effectively under the following conditions and guidelines:

- **Temperature:** -4°F to 125°F (-20°C to 51°C)
- **Humidity:** 10 - 95% RH
- **Airflow:** Odorcarb™ II Media shall be effective in Purafil ESD systems, including the Drum Scrubber with airflows from 100 to 1,000 CFM (170 to 1699 m³/hr), Tub Scrubber with airflows from 500 to 6,000 CFM (850 to 10,194 m³/hr) and Deep Bed Scrubber with airflows from 600 to 8,000 CFM (1,020 to 13,592 m³/hr). Odorcarb™ II Media shall also be effective in Vessel Scrubbers with airflows from 8,000 to 20,000 cfm (13,592 to 33,980 m³/hr).

Other Media

Purafil ESD's Odorcarb™ II Media can be used with other media manufactured by Purafil, Inc. Specific media are available for selection based upon the composition of the contaminants present, gaseous concentration levels, airflow requirements and environmental concerns. These media include Odoroxidant™, for the removal of sulfur dioxide, hydrogen sulfide, aldehydes and many organic compounds; Odormix™ for broad-spectrum removal of sewerage odors; Odorkol™ for the removal of hydrocarbons; Odorkol™ AM for the removal of ammonia; Chlorosorb® II for the specific gas removal of chlorine; CSO™ for emergency removal of chlorine and sulfur dioxide.

Purafil ESD, Your Single Source For...

- Media Manufacturing
- Equipment Design & Manufacturing
- Complimentary Media Life Analysis
- Monitoring Instruments & Programs

PURAFIL Environmental Systems Division

Purafil, Inc. • 2654 Weaver Way • Doraville, Georgia 30340 • Phone: (770) 662-8545 • Fax: (770) 263-6922 • www.purafil.com

PURAFIL
Environmental Systems Division

Specification: Odorcarb™ II Media

Target Contaminants
- Hydrogen sulfide
- Sulfur dioxide
- Volatile organic compounds

Media Specification
Odorcarb™ II media is manufactured specifically for corrosive environments and consists of generally spherical, porous pellets. Composed of carbon, alumina and other binders, Odorcarb™ II pellets are impregnated during pellet formation such that the impregnant is uniformly distributed throughout the pellet volume and is totally available for reaction.

Chemisorptive Process
The Purafil chemisorptive process shall remove contaminant gases by means of adsorption, absorption, and chemical reaction. Gases shall be trapped within the pellet, where oxidation changes the gases into harmless solids, thus eliminating the possibility of desorption.

Removal Capacity
Odorcarb™ II media shall meet the following removal capacities:

- Hydrogen sulfide: 35% by weight

For example, 100 lbs (45.36 kg) of Odorcarb™ II media will remove a minimum of 35 lbs (15.88 kg) of hydrogen sulfide.

Physical Properties
Odorcarb™ II media shall have the following physical properties:

- Moisture content: 35% maximum
- Crush strength: 35% - 70% maximum
- Abrasion: 4.5% maximum
- Bulk density: 45 lbs/ft^3 (721 kg/m^3)
- Nominal pellet diameter: 1/16" - 1/8" (1.59 mm - 3.175 mm)
- Odorcarb™ II media is UL Classified Class 2

2654 Weaver Way Doraville, Georgia 30340 USA Ph: (770) 662-8545 (800) 222-6367 Fax: (770) 263-6922 www.purafil.com

Application Guidelines
Odorcarb™ II media shall perform effectively under the following conditions and guidelines:

• Temperature: -4° F - 125° F (-20° C - 51° C)

• Humidity: 10% - 95% RH

• Airflow: Odorcarb™ II media shall be effective in commercial and industrial systems with airflows ranging from less than 25 cfm to over 100,000 cfm (42.5 m^3/hr - 169,920 m^3/hr) and with velocities from 60 to 500 fpm (0.30 to 2.54 m/s).

• Media performance: Odorcarb™ II media shall be designed for 99.5% minimum removal efficiency in Purafil systems.

• Media life: Regular media samples of Odorcarb™ II media shall be taken for projecting remaining media life, providing scheduled maintenance, and ensuring performance.

Installation and Disposal Requirements
• Installation: Installers shall use dust masks, safety goggles, and rubber gloves.

• Disposal: Spent Odorcarb™ II media shall be disposed of according to local, state and, federal guidelines.

2654 Weaver Way Doraville, Georgia 30340 USA Ph: (770) 662-8545 (800) 222-6367 Fax: (770) 263-6922 www.purafil.com

Purafil ESD's Odoroxidant™ Media

Proven Performance

Odoroxidant™ Media demonstrates a high removal capacity for sewerage gases, including hydrogen sulfide, aldehydes, sulfur dioxide and many organic compounds.

Characteristics

- Landfill disposable
- UL Classified Class 1
- New and spent media is non-toxic
- Will not support bacterial or fungal growth

Media

Purafil ESD's Odoroxidant™ Media shall consist of manufactured, generally spherical, porous pellets. Pellets shall be formed from a combination of activated alumina and other binders, suitably impregnated with potassium permanganate to provide optimum adsorption, absorption and oxidation of a wide variety of gaseous contaminants. The potassium permanganate shall be applied during pellet formation, such that the impregnant is uniformly distributed throughout the pellet volume and is totally available for reaction.

Disposal Requirements

Spent Odoroxidant™ Media should be disposed of according to local, state and federal guidelines.

The Chemisorptive Process

The chemisorptive process shall remove contaminant gases by means of adsorption, absorption, and chemical reaction. Gases shall be trapped within the pellet where an irreversible chemical reaction changes the gases into harmless solids, eliminating the possibility of desorption.

Removal Capacity

Purafil ESD's Odoroxidant™ Media shall meet the following removal capacities:

- **Hydrogen Sulfide:** 18.0% min. by weight
- **Sulfur Dioxide:** 7.0% min. by weight

For example, 100 pounds (45.36 kg) of Purafil ESD's Odoroxidant™ Media will remove a minimum of 18 pounds (8.16 kg) of hydrogen sulfide.

Physical Properties

Purafil ESD's Odoroxidant™ Media shall have the following physical properties:

- **Moisture Content:** 35% Maximum
- **Crush Strength:** 35% - 70%
- **Abrasion:** 4.5% Maximum
- **Bulk Density:** 50 lbs/ft^3 (800 kg/m^3)
- **Pellet Diameter:** 1/16" - 1/8" (1.5 mm - 3.2 mm)
- **Potassium Permanganate Content:** 8% Minimum

Applications

Odoroxidant™ Media is designed for the removal of odorous gases pervasive in wastewater operations. The media is used in conjunction with other Purafil ESD media and serves to polish remaining odorous gases before discharge to the atmosphere.

Application Guidelines

Odoroxidant™ Media shall perform effectively under the following conditions and guidelines:

- **Temperature:** -4°F to 125°F (-20°C to 51°C)
- **Humidity:** 10 - 95% RH
- **Airflow:** Odoroxidant™ Media shall be effective in Purafil ESD systems, including the Drum Scrubber with airflows from 100 to 1,000 CFM (170 to 1699 m^3/hr), Tub Scrubber with airflows from 500 to 6,000 CFM (850 to 10,194 m^3/hr) and Deep Bed Scrubber with airflows from 600 to 8,000 CFM (1,020 to 13,592 m^3/hr). Odoroxidant™ Media shall also be effective in Vessel Scrubbers with airflows from 8,000 to 20,000 cfm (13,592 to 33,980 m^3/hr).

Other Media

Purafil manufactures specific media for selection based upon the composition of the contaminant gases present, concentration levels, airflow requirements, environmental concerns, and room design considerations. These media include Odormix™ for broad-spectrum removal of sewerage odors; Odorcarb™ II for removal of hydrogen sulfide, sulfur dioxide and chlorine; Odorkol™ for removal of hydrocarbons; Odorkol™ AM for removal of ammonia; CSO™ for emergency removal of sulfur dioxide and chlorine gas; Chlorosorb® II for removal of chlorine gas.

Purafil ESD, Your Single Source For...

- Media Manufacturing
- Equipment Design & Manufacturing
- Complimentary Media Life Analysis
- Monitoring Instruments & Programs

PURAFIL Environmental Systems Division

Purafil, Inc. • 2654 Weaver Way • Doraville, Georgia 30340 • Phone: (770) 662-8545 • Fax: (770) 263-6922 • www.purafil.com

PURAFIL
Environmental Systems Division

Specification: Odoroxidant™ Media

Target Contaminants
- Aldehydes
- Amines
- Oxides
- Sulfur compounds

Media Specification
Purafil ESD's Odoroxidant™ media shall consist of manufactured, generally spherical, porous pellets. Pellets shall be formed from a combination of activated alumina and other binders suitably impregnated with potassium permanganate to provide optimum adsorption, absorption, and oxidation of a wide variety of gaseous contaminants. The potassium permanganate shall be applied during pellet formation such that the impregnant is uniformly distributed throughout the pellet volume and is totally available for reaction.

Chemisorptive Process
The Purafil ESD chemisorptive process shall remove contaminant gases by means of adsorption, absorption, and chemical reaction. Gases shall be trapped within the pellet, where an irreversible chemical reaction changes these gases into harmless solids, thus eliminating the possibility of desorption.

Removal Capacity
Purafil ESD's Odoroxidant™ media shall meet the following removal capacities:

- Hydrogen sulfide: 14.0% minimum by weight
- Sulfur dioxide: 7.0% min. by weight

For example, 100 lbs (45.36 kg) of Purafil ESD's Odoroxidant™ media will remove a minimum of 14 lbs (6.34 kg) of hydrogen sulfide.

Physical Properties
Purafil ESD's Odoroxidant™ media shall have the following physical properties:

- Moisture content: 35% maximum
- Crush strength: 35% - 70% maximum
- Abrasion: 4.5% maximum
- Bulk density: 50 lbs/ft^3 (800 kg/m^3)
- Pellet diameter: 1/16" - 1/4" (1.5 mm - 6.5 mm)
- Potassium permanganate content: 8% minimum

2654 Weaver Way Doraville, Georgia 30340 USA Ph: (770) 662-8545 (800) 222-6367 Fx: (770) 263-6922 www.purafil.com

Applications
Odoroxidant™ media is designed for the removal of odorous gases pervasive in wastewater operations. The media is used in conjunction with other Purafil ESD medias and serves to polish remaining odorous gases before discharge to the atmosphere.

Application Guidelines
Odoroxidant™ media shall perform effectively under the following conditions and guidelines:

• Temperature: -4° F - 125° F (-20° C - 51° C)

• Humidity: 10% - 95% RH

• Airflow: Odoroxidant™ media shall be effective in Purafil ESD systems, including the Drum Scrubber with airflows from 100 - 500 cfm (170 - 850 m^3/hr), Tub Scrubber with airflows from 1,000 - 4,000 cfm (1,700 - 6,800 m^3/hr), and Deep Bed Scrubber with airflows from 600 - 6,000 cfm (1,020 - 10,200 m^3/hr). Odoroxidant™ media shall also be effective in Purafil ESD systems with velocities from 60 - 100 fpm (0.3 - 0.5 m/s).

Installation and Disposal Requirements
• Installation: Installers shall use dust masks, safety goggles, and rubber gloves.

• Disposal: Spent Odoroxidant™ media shall be disposed of according to local, state, and federal guidelines.

2654 Weaver Way Doraville, Georgia 30340 USA Ph: (770) 662-8545 (800) 222-6367 Fx: (770) 263-6922 www.purafil.com

Purafil ESD's Odormix™ Media

Proven Performance

Purafil ESD's Odormix™ Media offers broad spectrum removal of odorous gases related to sewerage treatment operations.

Characteristics

- Landfill disposable
- UL Classified Class 1
- Medias are pre-mixed at Purafil's factory
- Substitutes for a two-pass media system
- New and spent media is non-toxic

Media

Purafil ESD's Odormix™ Media shall consist of an equal mix (by volume) of Purafil ESD's Odoroxidant™ Media and Odorkol™ Media.

Odoroxidant™ Media shall be manufactured of generally spherical, porous pellets formed from a combination of powdered activated alumina and other binders, suitably impregnated with potassium permanganate to provide optimum adsorption, absorption and oxidation of a wide variety of gaseous contaminants. The potassium permanganate shall be applied during pellet formation, such that the impregnant is uniformly distributed throughout the pellet volume and is totally available for reaction. The Odorkol™ Media shall be a premium grade, activated carbon with a high surface area available for adsorption.

Disposal Requirements

Spent Odormix™ Media should be disposed of according to local, state and federal guidelines.

Physical Properties

Odormix™ Media bulk density is 40 lbs/ft³ (640 kg/m³).

Odoroxidant™ Media shall have the following physical properties:

- **Moisture Content:** 35% Maximum
- **Crush Strength:** 35% - 70%
- **Abrasion:** 4.5% Maximum
- **Bulk Density:** 50 lbs/ft³ (800 kg/m³)
- **Nominal Pellet Diameter:** 1/16" - 1/8" (1.5 mm - 3.2 mm)
- **Potassium Permanganate Content:** 8% Min.
- **Percentage of Pellet Remaining:** 80-85% after screening

Odorkol™ Media shall have the following physical properties:

- **Moisture Content:** >3%
- **CTC:** 55 Minimum
- **Base Material:** Activated Carbon
- **Bulk Density:** 30 lbs/ft³ (480 kg/m³)
- **Pellet Diameter:** 1/16" - 1/8" (1.5 mm - 3.2 mm)

Applications

Purafil ESD's Odormix™ Media is designed for broad spectrum removal of odorous gases, including mercaptans, hydrocarbons, hydrogen sulfide and sulfur dioxide. Odormix™ Media is recommended when space within Purafil ESD's multi-stage scrubber is limited; in this application, Odormix™ substitutes for two media passes. Odormix™ is also recommended as a polishing media.

Application Guidelines

Odormix™ Media shall perform effectively under the following conditions and guidelines:

- **Temperature:** -4°F to 125°F (-20°C to 51°C)
- **Humidity:** 10 - 95% RH
- **Airflow:** Odormix™ Media shall be effective in Purafil ESD systems, including the Drum Scrubber with airflows from 100 to 1,000 CFM (170 to 1699 m³/hr), Tub Scrubber with airflows from 500 to 6,000 CFM (850 to 10,194 m³/hr) and Deep Bed Scrubber with airflows from 600 to 8,000 CFM (1,020 to 13,592 m³/hr). Odormix™ Media Media shall also be effective in Vessel Scrubbers with airflows from 8,000 to 20,000 cfm (13,592 to 33,980 m³/hr).

Other Media

Purafil ESD's Odormix™ Media can be used with other media manufactured by Purafil, Inc. Specific media are available for selection based upon the composition of the contaminants present, gaseous concentration levels, airflow requirements and environmental concerns. These media include Odoroxidant™ for the removal of sulfur dioxide, hydrogen sulfide, aldehydes and many organic compounds; Odorcarb™ II for the removal of hydrogen sulfide, sulfur dioxide and chlorine; Odorkol™ for the removal of hydrocarbons; Odorkol™ AM for the removal of ammonia; and Chlorosorb® II for the specific gas removal of chlorine.

Purafil ESD, Your Single Source For...

- Media Manufacturing
- Equipment Design & Manufacturing
- Complimentary Media Life Analysis
- Monitoring Instruments & Programs

PURAFIL Environmental Systems Division

Purafil, Inc. • 2654 Weaver Way • Doraville, Georgia 30340 • Phone: (770) 662-8545 • Fax: (770) 263-6922 • www.purafil.com

PURAFIL
Environmental Systems Division

Specification: Odormix™ Media

Target Contaminants
- Mercaptans
- Hydrocarbons
- Hydrogen sulfide
- Sulfur dioxide

Media Specification
Purafil ESD's Odormix™ media shall consist of an equal mix by volume of Purafil ESD's Odoroxidant™ media and Odorkol™ media.

Odoroxidant™ media shall be manufactured of generally spherical, porous pellets formed from a combination of powdered activated alumina and other binders suitably impregnated with potassium permanganate to provide optimum adsorption, absorption, and oxidation of a wide variety of gaseous contaminants. The potassium permanganate shall be applied during pellet formation such that the impregnant is uniformly distributed throughout the pellet volume and is totally available for reaction.

Odorkol™ Media shall be a premium grade activated carbon with a high surface area available for adsorption.

Physical Properties
Odormix™ media shall have the following physical properties:

- Bulk density: 40 lbs/ft^3 (640 kg/m^3)

Odoroxidant™ media

- Moisture content: 35% maximum
- Crush strength: 35% - 70% maximum
- Abrasion: 4.5% maximum
- Bulk density: 50 lbs/ft^3 (800 kg/m^3)
- Nominal pellet diameter: 1/16" - 1/4" (1.5 mm - 6.5 mm)
- Potassium permanganate content: 8% minimum
- Percentage of pellet remaining: 80 - 85% after screening

2654 Weaver Way Doraville, GA 30340 USA Ph: (770) 662-8545 (800) 222-6367 Fx: (770) 222-6367 www.purafil.com

Odorkol™ media

- Moisture content: >3%
- CTC: 55 minimum
- Base material: Activated carbon
- Bulk density: 30 lbs/ft^3 (480 kg/m^3)
- Pellet diameter: 1/16" - 1/4" (1.5 mm - 6.5 mm)

Applications
Odormix™ media is recommended when space within Purafil ESD's multi-stage scrubber is limited; in this application, Odormix™ substitutes for two media passes. Odormix™ is also recommended as a polishing media.

Application Guidelines
Purafil ESD's Odormix™ media shall perform effectively under the following conditions and guidelines:

- Temperature: -4° F - 125° F (-20° C - 51° C)

- Humidity: 10% - 95% RH

- Airflow: Odormix™ media shall be effective in Purafil ESD systems, including the Drum Scrubber with airflows from 100 - 500 cfm (170 - 850 m^3/hr), Tub Scrubber with airflows from 1,000 - 4,000 cfm (1,700 - 6,800 m^3/hr), and Deep Bed Scrubber with airflows from 600 - 6,000 cfm (1,020 - 10,200 m^3/hr). Odormix™ media shall also be effective in Purafil ESD systems with velocities from 60 - 100 fpm (0.3 - 0.5 m/s).

Installation and Disposal Requirements
- Installation: Installers shall use dust masks, safety goggles, and rubber gloves.

- Disposal: Spent Odormix™ media shall be disposed of according to local, state, and federal guidelines.

2654 Weaver Way Doraville, GA 30340 USA Ph: (770) 662-8545 (800) 222-6367 Fx: (770) 222-6367 www.purafil.com

SERVICE GUIDE #122

Installation, Operation
&
Maintenance Instructions

Drum Scrubbers

DS-100 (170 m^3/hr) , DS-300 (510 m^3/hr), DS-500 (850 m^3/hr), & DS-1000 (1700 m^3/hr) Models

Manufactured by:

Purafil, Inc.

2654 Weaver Way
Doraville, GA, U.S.A. 30340
Telephone: (770) 662-8545
Fax: (770) 263-6922

Distributed by:

Airepure Australia

64 Geddes Street
Mulgrave, Victoria 3170
Telephone: 1300 886 353
Offices: Vic, NSW & SA

TABLE OF CONTENTS

1.0 PRE-INSTALLATION INSTRUCTIONS
- 1.1 SAFETY CONSIDERATIONS
- 1.2 RECEIVING INSTRUCTIONS
- 1.3 INSPECTION
- 1.4 STORAGE
- 1.5 FOUNDATIONS AND CLEARANCES

2.0 BASIC DESIGN OF THE DRUM FILTER

3.0 INSTALLATION
- 3.1 POSITIONING THE UNIT
- 3.2 MEDIA BANK FILLING INSTRUCTIONS (INITIAL START-UP)
- 3.3 MEDIA BANK FILLING INSTRUCTIONS (MEDIA REPLACEMENT)
- 3.4 POST-START INSPECTION/CHECK

4.0 MAINTENANCE
- 4.1 REPLACEMENT PARTS AND MATERIALS
- 4.2 MEDIA REPLACEMENT
- 4.3 SPECIAL PRECAUTIONS
- 4.4 PURAFIL® STAIN REMOVAL

5.0 WARRANTY

6.0 TROUBLE SHOOTING

7.0 SAMPLING RECORD

LIST OF FIGURES

FIGURE	TITLE
1	BASIC DESIGN

1.0 PRE-INSTALLATION INSTRUCTIONS

Service Guide #122 – Rev. 05/00

1.1 SAFETY CONSIDERATIONS

- Read this Service Manual carefully. Be thoroughly familiar with the controls and the proper use of the equipment.
- This manual should be retained with the unit because it contains the information necessary for proper maintenance.
- Keep all nuts, bolts, and screws tight to be sure the equipment is in safe working condition.

CAUTION:

- Installer should be a trained, experienced service person.
- Check the assembly and component weights to be sure that the rigging equipment can handle them safely.
- Be sure that the unit is balanced well in the transporting device.
- Always conduct a thorough check when the installation is complete.
- Never enter an enclosed blower cabinet or reach into a chousing while fan is running.
- The motors in PURAFIL® equipment get very hot. This is normal and should not be regarded as a problem with the motor. However, take special care to avoid touching the hot areas.

1.2 RECEIVING INSTRUCTIONS

Systems are normally shipped assembled and with motors mounted. All units are attached securely to skids. It is recommended that units be left on their skids for protection and ease of handling while transporting. Straps, rigging, slings, or hooks attached to the skids may be used, with proper care. The units are well protected with triple wall board and are secured with metal bands. Forklifts may be used under the skids, but exercise caution to prevent damage.

Upon receiving systems from Purafil, Inc., note any shipping damage, obvious or hidden, to your carrier and on your Bill of Lading. All problems should be handled between the customer and carrier except for U.P.S. shipments, which require the customer to contact Purafil, Inc. for action.

- If the unit is to be stored before use, see Section 1.4 in this manual.
- If the unit is to be installed immediately, be sure to check Section 3.0 in this manual.
- To uncrate unit, cut metal bands and remove packaging.
- For positioning and special handling, see Section 3.1 in this manual.

1.3 INSPECTION

The condition of the unit upon its arrival is critical to its proper operation. Prior to start-up, inspect the unit carefully, according to the checklist below. Correct any inadequacies before start-up to prevent possible damage or inefficiency. Note, should there be any questions concerning the unit, refer to the numbers found on the unit identification plate, when contacting the PURAFIL® representative.

PRE-OPERATION CHECK LIST

YES	NO	CONDITION
____	____	1. Configuration and material are as specified on the sales order form
____	____	2. Measurements fit submittal requirements

____ ____ 3. Parts are all present

____ ____ 4. Latches hold securely and gaskets seal properly

____ ____ 5. Labels and serial numbers are present

____ ____ 6. Airflow direction is consistent with installation requirements (check labels attached to unit)

Note: Checking specific points is also imperative after the unit is started up. See section 3.4 in this manual for checklist.

1.4 STORAGE

The unit should be protected from the elements during storage, especially when storage time is extensive. While indoor storage is considered best, outdoor storage can be adequate when precautions are taken.

OUTDOOR STORAGE PRECAUTIONS

- Cover the equipment with a tarp. Intake and discharge openings must be well covered. (Use of black plastic as a cover may cause excessive condensation and rusting.)
- If there is the possibility of moisture collection, allow for proper drainage.
- Do not place heavy equipment on top of the unit.
- Store Purafil® media in a dry place with less than 95% relative humidity.

1.5 FOUNDATION AND CLEARANCES

FOUNDATIONS

Some units may require new or reinforced foundations, due to their weight. Always be sure to check that the existing foundation is adequate for the unit to be installed. Units to be used indoors require particular attention to strength of foundation. In some instances, a concrete base is best suited to the system. Concrete lessens the chance for vibration than if metal structures are used.

CLEARANCE

All units should be easily accessible for the required periodic maintenance. Do not block return and discharge grilles. Sufficient minimum clearances can be recommended by the local PURAFIL® representative.

2.0 BASIC DESIGN OF THE DRUM FILTER

Designed to clean odorous air, the drum filter, coupled with the final particulate filter, contains an inlet pipe, blower, a media bed housed in a LDPE drum, and diffuser. Pre-engineered in a single unit, the drum filter is designed to exhaust recycled air. The drum filter is supplied with Odoroxidant™, Odorcarb™ II and Odormix™ media. The drum filter has a quiet, low horsepower motor and low pressure drop.

The drum filter includes the following components:

1. INLET PIPING/DIFFUSER – Air enters through a 100 mm (4"), (DS-100, 170 m^3/hr, 100 cfm model), 200mm (8"), (DS-300, 510 m^3/hr & DS-500, 850 m^3/hr, 300 & 500 cfm models) and 254 mm (10"), (DS-1000, 1700 m^3/hr, 1,000 cfm model) Fernco fitting prior to entering the drum.
2. MEDIA BED –
   - DS-100 (170 m^3/hr ,100 cfm model) consists of 0.028m^3 (1 ft^3), 22.7 kg of Odoroxidant media, 0.056m^3 (2 ft^3), 41 kg

of Odorcarb II media and, 0.056m^3 (2 ft^3), 36 kg of Odormix. Each cubic foot of media is contained in a MediaSak for easy handling and disposal.

- DS-300 (510 m^3/hr, 300 cfm model) comes complete with 0.056m^3 (2 ft^3), of Odoroxidant™ media (45 kg's), 0.14m^3 (5 ft^3) of Odorcarb™ II media (102 kg's) and 0.084m^3 (3 ft^3) of Odormix™ media (55 kg's.).
- DS-500 (850 m^3/hr, 500 cfm model) comes complete with 0.084m^3 (3 ft^3) of Odoroxiant media (68 kg's), 0.28m^3 (10 ft^3) of Odorcarb II media (205 kg's) and 0.112m^3 (4 ft^3) of Odormix media (73 kg's).
- DS-1000 (1,700 m^3/hr, 1,000 cfm model) comes complete with 0.224m^3 (8 ft^3) of Odoroxiant media (183 kg's), 0.588m^3 (21 ft^3) of Odorcarb II media (431 kg's) and 0.28m^3 (10 ft^3) of Odormix media (183 kg's).

3. BLOWER – the air is then propelled further by the blower assembly which includes a mill and chemical duty motor and direct drive blower, assuring even, quiet airflow.

4. FINAL FILTER (DS-300, DS-500 & DS-1000) – any remaining contaminants, such as media dust and airborne contaminants are removed in this final stage by a polymedia filter.

FIGURE 1: BASIC DESIGN

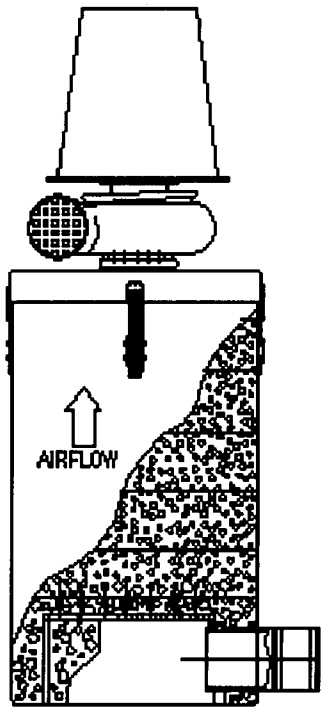

3.0 INSTALLATION

After the entire pre-operative inspection is finished (Section 1.3), complete the following sequence for installation:

(1) Remove the unit from the skid and position it in the designated operation location.

(2) Plug in the electrical connections.

(3) Start the unit.

(4) Perform post-start inspection check. (See Section 3.5)

3.1 POSITIONING THE UNIT

The standard unit can simply be transported by lift to its pre-designed operation location (if in

close proximity to the skid), according to facility safety requirements.

3.2 MEDIA FILLING INSTRUCTIONS (FOR INITIAL START-UP)

Proper filling, installation, and maintenance of the chemical filtration media is critical to the unit's efficient operation. The drums are designed specifically for media manufactured by Purafil, Inc. and allows the system to perform at maximum efficiency, through proper shape and bed depth. Drum filters are pre-filled with media at the factory.

3.4 MEDIA FILLING INSTRUCTIONS (FOR MEDIA REPLACEMENT)

Once media analysis (DS-300, DS-500 & DS-1000 models only) has determined that it is time for a replacement supply of media, replace the media according to the instructions below. Please note that after each media type or MediaSak is installed it is imperative that it is leveled out across the drum. This is to eliminate bypass and channeling effects.

For DS-100 Model:

- Media replacement is accomplished by removing the motor/blower lid assembly. Disconnect power supply.
- Remove MediaSaks (5).
- Install new MediaSaks (5).
- Install motor/blower lid assembly.
- See Section 4.3 for disposal precaution.

For DS-300, DS-500 & DS-1000 Models:

- Remove motor/blower lid assembly. Disconnect power supply.
- Remove Polymedia (blue) filter.
- Remove layer of Odormix™ media.
- Remove layer of Odorcarb™ II media.
- Remove layer of Odoroxidant™ media.
- Remove Polymedia (blue) filter.
- Install bottom Polymedia (blue) filter.
- Install new Odoroxidant media.
- Install new Odorcarb II media.
- Install new Odormix media.
- Install top Polymedia (blue) filter.
- Install motor/blower lid assembly.
- Connect power supply.
- See Section 4.3 for disposal precaution.

3.4 POST-START INSPECTION/CHECK

Before initial start-up of system, contact your local PURAFIL® representative. Their name and phone number is attached to your system. *Operate all DS models at the lowest air flow required to maintain a negative pressure and maximize media life.*

YES	NO	CONDITION
____	____	1. Joints, seals, and gaskets do not leak.
____	____	2. Particulate filters have been installed.

4.0 MAINTENANCE

4.1REPLACEMENT PARTS AND MATERIALS

While Purafil, Inc. products are built for durability, some parts of the PURAFIL® unit will require replacement during the normal lifetime of the equipment. Replacement items may be ordered from your local PURAFIL® representative or from Purafil, Inc.

Consumables: In order to maintain proper performance levels, particulate filters and PURAFIL® media must be replaced periodically, as they have a finite life (See Sampling Procedure Service Guide).

Moving Parts: Bearings, motors, etc. are all subject to gradual deterioration and/or sudden breakdown.

4.2 MEDIA REPLACEMENT

Need for Sampling (DS-300, DS-500 & DS-1000 models only)

1. PURAFIL® media has a finite life which is a function of the available potassium permanganate ($KMnO_4$) expressed as a percentage.

2. After start-up, your local Purafil representative will work with the owner to periodically secure media samples. Purafil, Inc. will provide regular laboratory analysis of such samples to establish life cycles. Note, color change of media does not indicate level of remaining life.

3. Since every installation varies due to the type and quantity level of the contaminant, each operator must develop a sample schedule best suited to their system. However, until a schedule can be established, we recommend that a sample is taken and sent for analysis, so that a replacement date can be projected with a recommended sampling schedule.

4. To take a sample from the media, utilize the media sampling ports located on the outside of the drum and insert the sampling probe into the media bed.

   Open the entry port of the sampling probe, pulling up until the port cover slides open.

   Close the sampling probe by pushing down and pour the contents into the plastic sample bag provided by your PURAFIL® representative.

   Seal tightly and label the laboratory bag. Use the same label name on the Transmittal Sheet.

   Place a label on the media bed to show that a sample was taken from it.

   Fill out the PURAFIL® Sample Transmittal and send it with the samples to the local representative or to the Purafil, Inc. laboratory. A replacement sampling kit will be mailed to you.

   A sampling record sheet is included with this manual. Record the following data, and file all related reports with the record sheet:

   - Date sample taken and mailed
   - Results of life analysis as reported by the Purafil Laboratory.

   After the Purafil® laboratory has analyzed the sample, a Certificate of Analysis will be sent to you detailing the approximate percentage of total life consumed, and if installation and sampling dates are provided, a projected replacement date will be given for each unit.

   The projected replacement dates may be used in updating budget requirements, and as a guide in ordering replacement material; however, since contaminant load is rarely constant, avoid relying too heavily on projected replacement dates.

   By maintaining up-to-date records showing the life expenditures of each filter bank, media banks with the greatest percentage of life expended can be replaced before other banks, which have less life expended.

4.3 SPECIAL PRECAUTIONS

Disposal

PURAFIL® media is a non-toxic, non-flammable substance. Filtration of contaminants through PURAFIL® media causes molecular changes to occur, and the resulting product is usually not harmful to the environment. Although special precautions are generally not required when disposing of spent media, government regulations

may require specific disposal procedures if the resulting product could be harmful to the environment. Large quantities of PURAFIL® media should not be disposed of in dumpster-like equipment because the weight of the media could cause difficulties in handling the dumpster.

Independent laboratory analysis for Environmental Protection Agency toxicity characteristics may be required if the contaminants eliminated from your environment include heavy metals and pesticides.

Inhalation

A well-ventilated work area is suggested for changing the PURAFIL® media, as dusting occurs in fresh media due to handling abrasion. Workers should avoid direct inhalation of considerable PURAFIL® dust, as it induces sneezing. In closed, unventilated spaces, dust masks such as the 3-M No. 8500 are suggested.

Water

Avoid exposing the PURAFIL® media to water or precipitation, as this dissolves permanganate content. Storage of media should be in a dry place with less than 95% relative humidity. Exposure of permanganate solution to the skin causes brown staining which is temporary and not harmful. This staining can be removed by washing in a diluted solution of water and sodium bisulfite.

Eye Contact

If dust is exposed to the eyes or delicate membrane, flush thoroughly with water and seek treatment by a physician. Follow normal procedures for exposure to abrasive dust.

4.4 PURAFIL® STAIN REMOVAL

The following stain removal procedure is stated here as information only, and neither Purafil, Inc., any of its subsidiaries, nor any agent or employee of Purafil, Inc. make any warranty or other representation regarding the efficacy or safety of this procedure. The stain removal could cause further damage to the garment or to the item from which one may attempt to remove the stain.

If the dust from PURAFIL® media comes in contact with organic material, there are two possible stain problems:

1. Manganese dioxide (MnO_2) which is insoluble, characterized by a medium brown color, and is found in expended PURAFIL media, can usually be removed by normal washing.

2. New (unused) PURAFIL® media contains potassium permanganate ($KMnO_4$), which is a strong oxidant and will react with and discolor any organic material with which it comes in contact. These stains, which will be brownish black in color, may be removed using a solution of sodium bisulfite in water, after the garment has been removed from the person.

However, if the fiber has been damaged by the permanganate, removal of the stain may make the damage more apparent.

CAUTION: This procedure should start with a very weak solution, gradually increasing the strength until the stain is removed. Use of too strong a solution could conceivably cause additional fabric damage.

NOTE: Sodium bisulfite gives off sulfur dioxide (SO_2) gas; therefore, it must be used in a well-ventilated area.

5.0 WARRANTY

PURAFIL warrants hardware equipment manufactured by PURAFIL to be free from defects in material and workmanship under normal use and service for one (1) year from shipment date. PURAFIL's obligation under this warranty shall be limited to replacing any parts thereof which shall be demonstrated to have been defective. THIS WARRANTY IN LIEU OF ALL OTHER WARRANTIES, EXPRESSED OR IMPLIED, INCLUDING THE WARRANTIES OF MERCHANTABILITY AND FITNESS.

PURAFIL MAKES NO WARRANTIES AS TO MERCHANTABILITY OR AS TO THE FITNESS OF THE MERCHANDISE FOR ANY PARTICULAR USE AND SHALL NOT BE LIABLE FOR ANY LOSS OR DAMAGE, DIRECTLY OR INDIRECTLY, ARISING FROM THE USE OF SUCH MERCHANDISE OR FOR CONSEQUENTIAL DAMAGES. No person, firm or corporation is authorized to assume for PURAFIL any other liability in connection with the sale of these goods. Equipment, parts, and material manufactured by others and incorporated in PURAFIL equipment are warranted by PURAFIL ONLY TO THE EXTENT OF THE ORIGINAL MANUFACTURERS LIABILITY TO PURAFIL.

6.0 TROUBLESHOOTING

	SYMPTOM	PROBLEM	CHECKS/REMEDY
Media Bank	Airflow too low	Filters loaded	Replace filters

Service Guide #122 – Rev. 05/00

7.0 SAMPLE RECORD

Sampling Record/Schedule					

Represented By

Important Notice

The information contained in this Bulletin reflects the results of various testing and analytical procedures believed by PURAFIL, INC. (a U.S.A. corporation) to be useful indicators of the relative performance of air filtration systems and media. It is intended for use by persons having appropriate scientific and technical knowledge and experience at their own risk. This bulletin does not in any way constitute a representation, warranty, promise, or guarantee by PURAFIL, INC. of the installed performance of PURAFIL® media.

Service Guide #122 – Rev. 05/00

Appendix B: Mechanical Drawing

Drawing No.	*Description*
CC-070104	DS-1000 Drum Scrubber with Blower & Rainhood

© Airepure Australia Pty. Ltd.

Environmental Systems
A Division of Purafil, Inc.
2654 WEAVER WAY
DORAVILLE, GA 30340
(770)662-8545

1000 CFM DRUM SCRUBBER
WITH BLOWER & RAINHOOD

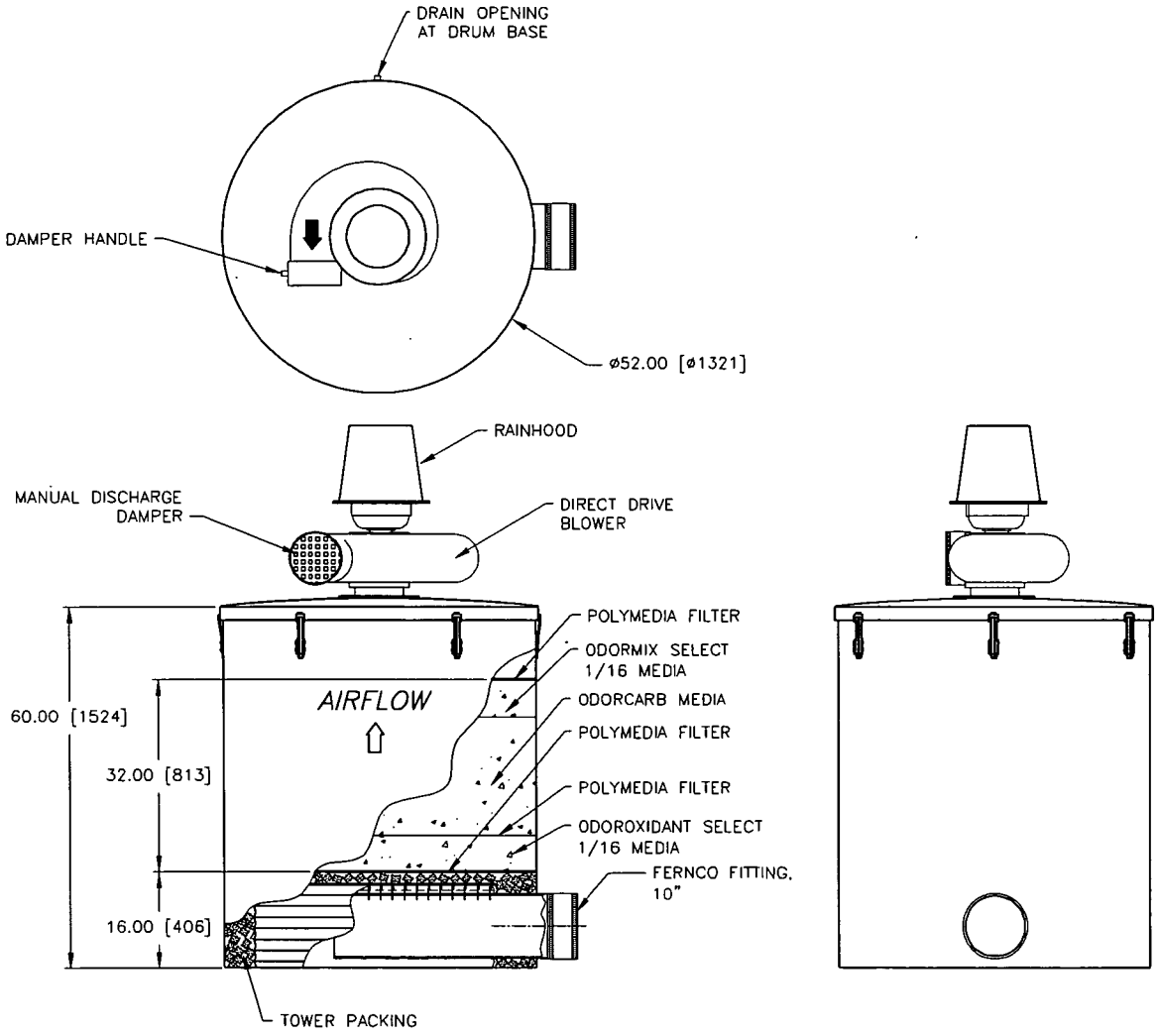

JOB/UNIT IDENTIFICATION:

MODEL #: DS-1000

MATERIAL: DRUM – LOW DENSITY POLYETHYLENE

FINISH: DRUM – BLACK

ELECTRICAL:

VOLTS	PH	HZ	HP	TYPE
(STD) 115/230	1	60	3.0	TEFC

MAX RECOMMENDED AIRFLOW: 1500 CFM W/2.25 IWG ESP AVAILABLE

MIST ELIMINATOR:

TYPE	QTY	SIZE
NONE		

PURAFIL® AIR PURIFICATION MEDIA(S) IN DIRECTION OF AIRFLOW:

MEDIA TYPE	TOTAL MEDIA
ODOROXIDANT SELECT 1/16	400 LB [181 KG]
ODORCARB	945 LB [429 KG]
ODORMIX SELECT 1/16	400 LB [181 KG]

INLET CONNECTION:

10.0" [254mm] INLET

FOR APPROVAL / FOR INFORMATION / FOR CONSTRUCTION / AS BUILT

DATE: 07/01/04

REV DATE:

APPROXIMATE OPERATING WEIGHT: 1938 LB [879 KG]

APPROVED BY: AAY/BLG

DRAWING NUMBER: CC-070104

REVISION: —

This drawing is the property of Purafil, Inc. and is not to be reproduced or copied in whole or in part. It is only to be used for the project and site specifically identified herein and is not to be used in any other project. It is to be returned upon request.

DIMENSIONS ARE IN INCHES. METRIC EQUIVALENTS IN BRACKETS [ ] ARE IN MILLIMETERS.
PURAFIL, INC. RESERVES THE RIGHT TO MODIFY DESIGN FOR IMPROVED PRODUCT PERFORMANCE.
PURAFIL®, PURAFIL II®, PURASORB®, CHLOROSORB®, AND THE SCOOTER® SKUNK EMBLEM (REG. U.S.PAT. & TM OFFICE), PURASTAT™, HEBA-LOCK™, CORROSIVE-AIRE™, E.S. *™, PURACARB™, PM™ SERIES AND THE DISTINCTIVE SHAPE OF PM™ MODULES ARE TRADEMARKS OF PURAFIL™, INC., A U.S.A. CORPORATION.

Appendix C: Material Safety Data Sheets.

No.if applicable	*Description*
	MSDS Purafil Odorcarb II Media
	MSDS Purafil Odoroxidant Media
	MSDS Purafil Odormix Media

© Airepure Australia Pty. Ltd.

PURAFIL Environmental Systems Division

MATERIAL SAFETY DATA SHEET

1. PRODUCT AND COMPANY IDENTIFICATION

Product Name (as used on the label): Odorcarb™ II Media

Product Synonyms:
Puracarb II WW, Odorcarb™ II

Supplier Name and Address:

Airepure Australia P/L
64 Geddes Street
MULGRAVE VIC 3170
Contact: 1300 886 353

2. COMPOSITION / INFORMATION ON INGREDIENTS

Preparation Chemical Nature:
The preparation is a combination of both solid base substances as well as liquid impregnants. The combined properties of the preparation are less reactive than the most reactive individual substances listed below.

COMPONENTS

Common Chemical Name	Synonyms	CAS Number	Wt %
Water	dihydrogen oxide	7732-18-5	≤35
aluminum oxide (non-fibrous)	activated aluminas; activated and amorphous aluminas	1333-84-2*	≤32
proprietary ingredient	--	--	≤32
activated carbon	carbon; carbon, activated	7440-44-0	≤32
potassium hydroxide	caustic potash, liquid	1310-58-3	>5

*For TSCA inventory reporting purposes, CAS No. 1344-28-1 was assigned for all forms of aluminum oxide instead of the CAS No. 1333-84-2 as indicated above.

3. HAZARDS IDENTIFICATION

Most Important Hazards:

- If crushed or handled extensively, dust may evolve and can be irritating to the eyes, skin, and respiratory tract.
- Wet activated carbon removes oxygen from the air causing severe hazards for workers in enclosed spaces. The product is by no means one hundred percent activated carbon, but it may have the potential to act as described above. Before entering such an area, sampling and work procedures for low oxygen levels should be taken to ensure ample oxygen availability, observing all local, state, and federal regulations.
- Solutions of this product may be caustic due to high pH.

Adverse Human Health Effects:

- The following medical conditions may be aggravated by exposure to the product: asthma, chronic lung disease, and skin rashes.
- In solution, this product may produce a basic (caustic) solution and similar precautions should be taken as those for basic (caustic) solutions when such a solution is produced.

Environmental Effects:

If contacted by water, the active ingredients may produce a basic solution depending on amounts of media and water. If such a solution is produced, the pH should be checked and kept within local regulations by buffering with suitable neutral or acidic agent.

Emergency Overview:

Inhalation: Move to fresh air. If breathing difficulty occurs or persists, seek medical attention.
Skin Contact: Wash area with soap and water.
Eye Contact: Flush with large quantities of water for 15 minutes. Seek medical attention.
Ingestion: Seek medical attention.

4. FIRST-AID MEASURES

First aid measures should be taken as indicated below for the following routes of exposure.

Inhalation:

Move to fresh air. If breathing difficulty occurs or persists, seek medical attention.
Skin Contact: Wash area with soap and water.
Eye Contact: Flush with large quantities of water for 15 minutes. Seek medical attention.
Ingestion: Seek medical attention.

Notes to Physician:

Treatment is recommended to be symptomatic and supportive. If patient has been exposed to this product in solution, the solution may be basic (caustic), treat the affected person appropriately.

5. FIRE-FIGHTING MEASURES

Suitable Extinguishing Media:
If involved in a fire, flood with plenty of water.

Specific Hazards:
When involved in a fire, the dilute potassium hydroxide may liberate hydrogen and the solid base materials may liberate carbon monoxide.

Protection of Firefighters:
Fire fighters should wear NIOSH approved, positive pressure, self-contained breathing apparatus and full protective clothing.

6. ACCIDENTAL RELEASE MEASURES

Personal Precautions:
Protective clothing appropriate for the environment should be worn. Goggles or safety glasses with side shields, NIOSH approved dust masks, rubber or plastic gloves, and full cover clothing covering arms and legs are recommended.

Environmental Precautions:
See section **3. HAZARDS IDENTIFICATION, Environmental Effects.**

Methods for Cleaning Up:
Clean up using dry procedures (broom, shovel, etc.); avoid dusting.

Recovery:
Product may be recovered for use if it has not come in contact with liquid, changed color, or been exposed to significant amounts of gaseous contaminants.

Neutralization:
See section **3. HAZARDS IDENTIFICATION, Environmental Effects.**

Disposal: See section **13. DISPOSAL CONSIDERATIONS.**

7. HANDLING AND STORAGE

Handling:
Use air conveying (vacuum) for bulk removal. If manual handling is used for transfer (from vessel, slingbags, boxes, or pails), use mechanical ventilation or other measures to remove airborne dust.

Technical Measures:
The following precautions should be taken when handling the product.

Prevention of User Exposure:
Goggles or safety glasses with side shields are recommended.
NIOSH approved dust masks are recommended.
Rubber or plastic gloves are recommended.
Full cover clothing covering arms and legs is recommended.

Precautions for Safe Handling:

- Wet activated carbon removes oxygen from the air causing severe hazards for workers in enclosed spaces. The product is by no means one hundred percent activated carbon, but it may have the potential to act as described above. Before entering such an area, sampling and work procedures for low oxygen levels should be taken to ensure ample oxygen availability, observing all local, state, and federal regulations.
- Avoid crushing the product to keep dusting to a minimum. As described under **Handling** above, mechanical ventilation or other measures may be needed to remove airborne dust.
- Protect from water and exposure to contaminated air (gaseous, particulate, and aerosol contaminated), otherwise the product may be rendered useless.

Storage:
General good storage practices should be followed.

Storage Conditions:
The following storage conditions should be maintained.

Suitable Conditions:
Store in a cool, dry area and keep in original, closed containers.

Incompatible Products:
Product should be kept protected from water and exposure to contaminated air (gaseous, particulate, and aerosol contaminated), otherwise the product may be rendered useless.

Packaging Materials:
The following materials are used and should be used for packaging of the product. These are intended to keep contaminants away from the product.

Recommended Materials:

- Corrugated boxes of 350 lb, double wall quality, with 4 mm plastic liners.
- Injection molded, polystyrene pails and lids including a neoprene seal.

Not Suitable Materials:
Porous materials allowing contact with water, air, and the contaminants contained therein.

8. EXPOSURE CONTROLS / PERSONAL PROTECTION

Engineering Measures:
Minimize eye and skin contact by using appropriate protective equipment. Use local or general room ventilation to control airborne dust that may be generated.

Personal Protective Equipment:
The following recommendations are made for appropriate personal protective equipment for the following.

Respiratory Protection: NIOSH approved dust mask
Hand Protection: Rubber or plastic gloves
Eye Protection: Goggles or safety glasses with side shields
Skin and Body Protection: Full cover clothing covering arms and legs.

Hygiene Measures: Do not inhale dust and avoid contact with eyes.

9. PHYSICAL AND CHEMICAL PROPERTIES

Physical State: Solid
Form: Spherical pellets approximately 1.5 – 6.4 mm (1/16 – 1/4 in.) in diameter
Color: Black
Odor: No significant odor
PH: Not relevant
Temperature of Physical State Change: Not relevant
Flashpoint: Not relevant
Ignition Temperature: >300°C (572°F)[1]
Bulk Density: 0.721 g/cc (45 lb/ft^3)
Solubility: Insoluble

10. STABILITY AND REACTIVITY

Stability: Stable under normal conditions.
Hazardous Reactions: none known
Materials to Avoid:
Protect from water and exposure to contaminated air (gaseous, particulate, and aerosol contaminated), otherwise the product may be rendered useless.

Hazardous Decomposition Products:
When involved in a fire, the dilute potassium hydroxide may liberate hydrogen and the solid base materials may liberate carbon monoxide.

Intended Use and Foreseeable Misuse:
Intended use is for air purification from gaseous contaminants. The product is not intended to remove dangerous particulates or biological contaminants. Other media/systems would be required for those. The product is not intended to purify water.

11. TOXICOLOGICAL INFORMATION

Acute Toxicity: Expected to be low[2], not tested
Local Effects:
See section **3. HAZARDS IDENTIFICATION, Adverse Human Health Effects.**

Sensitization:
Primary skin irritation and corrosivity (rabbits): expected to be low[2], not tested
Eye irritation (rabbits): expected to be an irritant[2], not tested

Primary Route of Entry: Inhalation, ingestion, skin contact, eye contact

12. ECOLOGICAL INFORMATION

Not determined. See Section **3. HAZARDS IDENTIFICATION, Environmental Effects.**

13. DISPOSAL CONSIDERATIONS

Waste From Residues:
New product (media) can generally be disposed of in a landfill. Spent media that has removed toxic chemicals should be examined for specific hazards. Local regulations should always be consulted and followed.

Contaminated Packaging: Not relevant

14. TRANSPORT INFORMATION

International Regulations:
Odorcarb II media contains approximately 30% (by weight) activated carbon, which is produced by a steam activation process. Because of this Odorcarb II is not subject to the provisions of the International Dangerous Goods Code (IMDG) or the labeling and packaging requirements of International Maritime Organization (IMO) Class 4.2.

Proper Shipping Name: Not Applicable

15. REGULATORY INFORMATION

Regulations:
This section contains information specifically applicable to the chemical product relative to the following regulations. Local regulations should always be consulted and followed.

SARA Title III (Superfund Amendments and Reauthorization Act)

Section 302 Extremely Hazardous Substances (40CFR355): Not Listed

Section 312 Hazard Categories (40CFR370.2):
Only expected as Acute (eye irritant), see section **11 TOXICOLOGICAL INFORMATION**

Section 313 Reportable Ingredients (40CFR372): None listed.

16.OTHER INFORMATION

Disclaimer:
The information contained herein is accurate to the best of our knowledge. We do not suggest or guarantee that any hazards listed herein are the only ones, which exist. Purafil, Inc. makes no warranty of any kind, express or implied, concerning the safe use of this material in your process or in combination with other substances. Effects can be aggravated by other materials and/or this material may aggravate or add to the effects of other materials. The user has sole responsibility to determine the suitability of the material for any use and the manner of use contemplated.

[1] According to ASTM D 3466-76 - Standard Test Method for Ignition Temperature of Granular Activated Carbon.
[2] According to methods described in US Government Document 29CFR1910.1200.

PURAFIL Environmental Systems Division

MATERIAL SAFETY DATA SHEET

1. PRODUCT AND COMPANY IDENTIFICATION

Product Name (as used on the label): Odoroxidant™ Media

Product Synonyms:
Odoroxidant™ Select Media

Supplier Name and Address:

Airepure Australia P/L
64 Geddes Street
MULGRAVE VIC 3170

Contact: 1300 886 353

2. COMPOSITION / INFORMATION ON INGREDIENTS

Preparation Chemical Nature:
The preparation is a combination of both solid base substances as well as liquid impregnants. The combined properties of the preparation are less reactive than the most reactive individual substances listed below.

COMPONENTS

Common Chemical Name	Synonyms	CAS Number	Wt %
aluminum oxide (non-fibrous)	activated aluminas; activated and amorphous aluminas	1333-84-2*	≤64
Water	dihydrogen oxide	7732-18-5	≤35
proprietary ingredient	--	--	≤24
potassium permanganate	permanganate of potash; chameleon mineral; permanganic acid, potassium salt	7722-64-7	≥8

*For TSCA inventory reporting purposes, CAS No. 1344-28-1 was assigned for all forms of aluminum oxide instead of the CAS No. 1333-84-2 as indicated above.

3. HAZARDS IDENTIFICATION

Most Important Hazards:
If crushed or handled extensively, dust may evolve and can be irritating to the eyes or respiratory tract.

Adverse Human Health Effects:
- The following medical conditions may be aggravated by exposure to the product: asthma, chronic lung disease, and skin rashes.
- If the product contacts the skin with water, it may leave a stain of insoluble products on the skin. This stain will be washed away/rubbed off over a period of time (hours to days).

Environmental Effects:
If the product is contacted by water, some of the potassium permanganate may leach out and the water may turn pink to purple in color. Sodium bisulfite will clarify the water (by chemical reduction), but will give off sulfur dioxide and should only be used in well ventilated areas. Local regulations should always be consulted and followed.

Emergency Overview:
Inhalation: Move to fresh air. If breathing difficulty occurs or persists, seek medical attention.
Skin Contact: Wash area with large quantities of water.
Eye Contact: Flush with large quantities of water. Seek medical attention.
Ingestion: Seek medical attention.

4. FIRST-AID MEASURES

First aid measures should be taken as indicated below for the following routes of exposure.

Inhalation:
Move to fresh air. If breathing difficulty occurs or persists, seek medical attention.
Skin Contact: Wash area with large quantities of water.
Eye Contact: Flush with large quantities of water. Seek medical attention.
Ingestion: Seek medical attention.
Notes to Physician:
Product is expected to be non-toxic and is classified as an eye irritant in the powder form. Treatment is recommended to be symptomatic and supportive.

5. FIRE-FIGHTING MEASURES

Suitable Extinguishing Media:
The product is UL Classified Class 1 (when clean does not contribute fuel when attacked by flame and emits only negligible amounts of smoke). Use fire fighting measures that suit the environment.

Specific Hazards:
When involved in a fire, the dilute potassium permanganate may liberate corrosive fumes.

Protection of Firefighters:
Fire fighters should wear NIOSH approved, positive pressure, self-contained breathing apparatus and full protective clothing.

6. ACCIDENTAL RELEASE MEASURES

Personal Precautions:
Protective clothing appropriate for the environment should be worn. Goggles or safety glasses with side shields, NIOSH approved dust masks, rubber or plastic gloves, and full cover clothing covering arms and legs are recommended.

Environmental Precautions:
See section **3. HAZARDS IDENTIFICATION, Environmental Effects.**

Methods for Cleaning Up:
Clean up using dry procedures (broom, shovel, etc.); avoid dusting.

Recovery:
Product may be recovered for use if it has not come in contact with liquid, changed color, or been exposed to significant amounts of gaseous contaminants.
Neutralization:
See section **3. HAZARDS IDENTIFICATION, Environmental Effects.**
Disposal: See section **13. DISPOSAL CONSIDERATIONS.**

7. HANDLING AND STORAGE

Handling:
Use air conveying (vacuum) for bulk removal. If manual handling is used for transfer (from vessel, slingbags, boxes, or pails), use mechanical ventilation or other measures to remove airborne dust.

Technical Measures:
The following precautions should be taken when handling the product.

Prevention of User Exposure:
Goggles or safety glasses with side shields are recommended.
NIOSH approved dust masks are recommended.
Rubber or plastic gloves are recommended.
Full cover clothing covering arms and legs is recommended.

Precautions for Safe Handling:
- Avoid crushing the product to keep dusting to a minimum. As described under **Handling** above, mechanical ventilation or other measures may be needed to remove airborne dust.
- Protect from water and exposure to contaminated air (gaseous, particulate, and aerosol contaminated), otherwise the product may be rendered useless.

Storage:
General good storage practices should be followed.

Storage Conditions:
The following storage conditions should be maintained.

Suitable Conditions:
Store in a cool, dry area and keep in original, closed containers.

Incompatible Products:
Product should be kept protected from water and exposure to contaminated air (gaseous, particulate, and aerosol contaminated), otherwise the product may be rendered useless.

Packaging Materials:
The following materials are used and should be used for packaging of the product. These are intended to keep contaminants away from the product.

Recommended Materials:
- Corrugated boxes of 350 lb, double wall quality, with 4 mm plastic liners.
- Injection molded, polystyrene pails and lids including a neoprene seal.

Not Suitable Materials:
Porous materials allowing contact with water, air, and the contaminants contained therein.

8. EXPOSURE CONTROLS / PERSONAL PROTECTION

Engineering Measures:
Minimize eye and skin contact by using appropriate protective equipment. Use local or general room ventilation to control airborne dust that may be generated.

Personal Protective Equipment:
The following recommendations are made for appropriate personal protective equipment for the following.

Respiratory Protection: NIOSH approved dust mask
Hand Protection: Rubber or plastic gloves
Eye Protection: Goggles or safety glasses with side shields
Skin and Body Protection: Full cover clothing covering arms and legs.
Hygiene Measures: Do not inhale dust and avoid contact with eyes.

9. PHYSICAL AND CHEMICAL PROPERTIES

Physical State: Solid
Form: Spherical pellets approximately 1.5 – 6.4 mm (1/16 – 1/4 in.) in diameter
Color: Purple
Odor: No significant odor
Ph: Not relevant
Temperature of Physical State Change: Not relevant
Flashpoint: Not relevant
Bulk Density: 0.800 g/cc (50 lb/ft^3)
Solubility: Partially soluble in water. Will dissolve in concentrated acids and alkalis.

10. STABILITY AND REACTIVITY

Stability: Stable under normal conditions
Hazardous Reactions:
Reactions with gaseous hydrogen chloride or vinyl chloride may produce chlorine. For these applications, the media should be combined with other media for the removal of chlorine gas.

Materials to Avoid:
Protect from water and exposure to contaminated air (gaseous, particulate, and aerosol contaminated), otherwise the product may be rendered useless.

Hazardous Decomposition Products:
When involved in a fire, the dilute potassium permanganate may liberate corrosive fumes.

Intended Use and Foreseeable Misuse:
Intended use is for air purification from gaseous contaminants. The product is not intended to remove dangerous particulates or biological contaminants. Other media/systems would be required for those. The product is not intended to purify water.

11. TOXICOLOGICAL INFORMATION

Acute Toxicity: Expected to be non-toxic[1], not tested
Local Effects:
See section **3. HAZARDS IDENTIFICATION, Adverse Human Health Effects.**

Sensitization:
Primary skin irritation and corrosivity (rabbits): expected to be non-irritant[1], not tested
Eye irritation (rabbits): irritant[1]

Primary Route of Entry: Inhalation, ingestion, skin contact, eye contact

12. ECOLOGICAL INFORMATION

Not determined. See Section **3. HAZARDS IDENTIFICATION, Environmental Effects.**

13. DISPOSAL CONSIDERATIONS

Waste From Residues:
New product (media) can generally be disposed of in a landfill. Spent media that has removed toxic chemicals should be examined for specific hazards. Local regulations should always be consulted and followed.

Contaminated Packaging: Not relevant

14. TRANSPORT INFORMATION

International Regulations: Not Applicable
Proper Shipping Name: Not Applicable

15. REGULATORY INFORMATION

Regulations:
This section contains information specifically applicable to the chemical product relative to the following regulations. Local regulations should always be consulted and followed.

SARA Title III (Superfund Amendments and Reauthorization Act)

Section 302 Extremely Hazardous Substances (40CFR355): Not listed

Section 312 Hazard Categories (40CFR370.2):
Only expected as Acute (eye irritant), see section **11 TOXICOLOGICAL INFORMATION.**

Section 313 Reportable Ingredients (40CFR372):
The potassium permanganate portion of the media contains a high percentage (~97%) Manganese Compound as a part of the chemical structure (manganese compounds CAS Reg. No. N/A) and is subject to the reporting requirements of Section 313 of Title III, Superfund Amendments and Reauthorization Act of 1986 and 40CFR372.

16. OTHER INFORMATION

Disclaimer:
The information contained herein is accurate to the best of our knowledge. We do not suggest or guarantee that any hazards listed herein are the only ones, which exist. Purafil, Inc. makes no warranty of any kind, express or implied, concerning the safe use of this material in your process or in combination with other substances. Effects can be aggravated by other materials and/or this material may aggravate or add to the effects of other materials. The user has sole responsibility to determine the suitability of the material for any use and the manner of use contemplated.

[1] According to methods described in US Government Document 29CFR1910.1200.

PURAFIL Environmental Systems Division

MATERIAL SAFETY DATA SHEET

1. PRODUCT AND COMPANY IDENTIFICATION

Product Name (as used on the label): Odormix™ Media

Supplier Name and Address:

Airepure Australia P/L
64 Geddes Street
MULGRAVE VIC 3170

Contact: 1300 886 353

2. COMPOSITION / INFORMATION ON INGREDIENTS

Preparation Chemical Nature:
The preparation is a combination of both solid base substances as well as liquid impregnants. The combined properties of the preparation are less reactive than the most reactive individual substances listed below.

COMPONENTS

Common Chemical Name	Synonyms	CAS Number	Wt %
aluminum oxide (non-fibrous)	activated aluminas; activated and amorphous aluminas	1333-84-2*	≤40
activated carbon	carbon; carbon, activated	7440-44-0	≥32
Water	dihydrogen oxide	7732-18-5	≤24
proprietary ingredient	--	--	≤15
potassium permanganate	permanganate of potash; chameleon mineral; permanganic acid, potassium salt	7722-64-7	≥5
Ash	--	--	≥5

*For TSCA inventory reporting purposes, CAS No. 1344-28-1 was assigned for all forms of aluminum oxide instead of the CAS No. 1333-84-2 as indicated above.

3. HAZARDS IDENTIFICATION

Most Important Hazards:

- If crushed or handled extensively, dust may evolve and can be irritating to the eyes or respiratory tract.
- Wet activated carbon removes oxygen from the air causing severe hazards for workers in enclosed spaces. The product is by no means 100% activated carbon, but it may have the potential to act as described above. Before entering such an area, sampling and work procedures for low oxygen levels should be taken to ensure ample oxygen availability, observing all local, state, and federal regulations.

Adverse Human Health Effects:

- The following medical conditions may be aggravated by exposure to the product: asthma, chronic lung disease, and skin rashes.
- If the product contacts the skin with water, it may leave a stain of insoluble products on the skin. This stain will be washed away/rubbed off over a period of time (hours to days).

Environmental Effects:

If the product is contacted by water, some of the potassium permanganate may leach out and the water may turn pink to purple in color. Sodium bisulfite will clarify the water (by chemical reduction), but will give off sulfur dioxide and should only be used in well ventilated areas. Local regulations should always be consulted and followed.

Emergency Overview:

Inhalation: Move to fresh air. If breathing difficulty occurs or persists, seek medical attention.
Skin Contact: Wash area with soap and water.
Eye Contact: Flush with large quantities of water for 15 minutes. Seek medical attention.
Ingestion: Seek medical attention.

4. FIRST-AID MEASURES

First aid measures should be taken as indicated below for the following routes of exposure.

Inhalation:

Move to fresh air. If breathing difficulty occurs or persists, seek medical attention.
Skin Contact: Wash area with soap and water.
Eye Contact: Flush with large quantities of water for 15 minutes. Seek medical attention.
Ingestion: Seek medical attention.
Notes to Physician:
Product is expected to be non-toxic and only an eye irritant in the powder form. Treatment is recommended to be symptomatic and supportive.

5. FIRE-FIGHTING MEASURES

Suitable Extinguishing Media:
The product is UL Classified Class 1 (when clean does not contribute fuel when attacked by flame and emits only negligible amounts of smoke). Use fire fighting measures that suit the environment.

Specific Hazards:
When involved in a fire, the dilute potassium permanganate may liberate corrosive fumes and the solid base materials may liberate carbon monoxide.

Protection of Firefighters:
Fire fighters should wear NIOSH approved, positive pressure, self-contained breathing apparatus and full protective clothing.

6. ACCIDENTAL RELEASE MEASURES

Personal Precautions:
Protective clothing appropriate for the environment should be worn. Goggles or safety glasses with side shields, NIOSH approved dust masks, rubber or plastic gloves, and full cover clothing covering arms and legs are recommended.

Environmental Precautions:
See section **3. HAZARDS IDENTIFICATION, Environmental Effects.**

Methods for Cleaning Up:
Clean up using dry procedures (broom, shovel, etc.); avoid dusting.

Recovery:
Product may be recovered for use if it has not come in contact with liquid, changed color, or been exposed to significant amounts of gaseous contaminants.

Neutralization:
See section **3. HAZARDS IDENTIFICATION, Environmental Effects.**

Disposal: See section **13. DISPOSAL CONSIDERATIONS.**

7. HANDLING AND STORAGE

Handling:
Use air conveying (vacuum) for bulk removal. If manual handling is used for transfer (from vessel, slingbags, boxes, or pails), use mechanical ventilation or other measures to remove airborne dust.

Technical Measures:
The following precautions should be taken when handling the product.

Prevention of User Exposure:
Goggles or safety glasses with side shields are recommended.
NIOSH approved dust masks are recommended.
Rubber or plastic gloves are recommended.
Full cover clothing covering arms and legs is recommended.

Precautions for Safe Handling:

- Wet activated carbon removes oxygen from the air causing severe hazards for workers in enclosed spaces. The product is by no means 100% activated carbon, but it may have the potential to act as described above. Before entering such an area, sampling and work procedures for low oxygen levels should be taken to ensure ample oxygen availability, observing all local, state, and federal regulations.
- Avoid crushing the product to keep dusting to a minimum. As described under **Handling** above, mechanical ventilation or other measures may be needed to remove airborne dust.
- Protect from water and exposure to contaminated air (gaseous, particulate, and aerosol contaminated), otherwise the product may be rendered useless.

Safe Handling Advice:
Contact with strong oxidizers such as ozone, liquid oxygen, chlorine, permanganates, peroxides, etc. may result in generation of heat.

Storage:
General good storage practices should be followed.

Storage Conditions:
The following storage conditions should be maintained.

Suitable Conditions:
Store in a cool, dry area and keep in original, closed containers.

Incompatible Products:

- Product should be kept protected from water and exposure to contaminated air (gaseous, particulate, and aerosol contaminated), otherwise the product may be rendered useless.
- Contact with strong oxidizers such as ozone, liquid oxygen, chlorine, permanganates, peroxides, etc. may result in generation of heat.

Packaging Materials:
The following materials are used and should be used for packaging of the product. These are intended to keep contaminants away from the product.

Recommended Materials:

- Corrugated boxes of 350 lb, double wall quality, with 4 mm plastic liners.
- Injection molded, polystyrene pails and lids including a neoprene seal.

Not Suitable Materials:
Porous materials allowing contact with water, air, and the contaminants contained therein.

8. EXPOSURE CONTROLS / PERSONAL PROTECTION

Engineering Measures:
Minimize eye and skin contact by using appropriate protective equipment. Use local or general room ventilation to control airborne dust that may be generated.

Personal Protective Equipment:
The following recommendations are made for appropriate personal protective equipment for the following.

Respiratory Protection: NIOSH approved dust mask
Hand Protection: Rubber or plastic gloves
Eye Protection: Goggles or safety glasses with side shields
Skin and Body Protection: Full cover clothing covering arms and legs.
Hygiene Measures: Do not inhale dust and avoid contact with eyes.

9. PHYSICAL AND CHEMICAL PROPERTIES

Physical State: Solid
Form:
Spherical and cylindrical pellets approximately 1.5 – 6.4 mm (1/16 – 1/4 in.) in diameter
Color: Purple and black
Odor: No significant odor
PH: Not relevant
Temperature of Physical State Change: Not relevant
Flashpoint: Not relevant
Bulk Density: 0.640 g/cc (40 lb/ft^3)
Solubility: Partially soluble in water and more soluble in concentrated acids and alkalies

10. STABILITY AND REACTIVITY

Stability: Stable under normal conditions
Hazardous Reactions: None known
Materials to Avoid:

- Protect from water and exposure to contaminated air (gaseous, particulate, and aerosol contaminated), otherwise the product may be rendered useless.
- Contact with strong oxidizers such as ozone, liquid oxygen, chlorine, permanganates, peroxides, etc. may result in generation of heat.

Hazardous Decomposition Products:
When involved in a fire, the dilute potassium permanganate may liberate corrosive fumes and the solid base materials may liberate carbon monoxide.

Intended Use and Foreseeable Misuse:
Intended use is for air purification from gaseous contaminants. The product is not intended to remove dangerous particulates or biological contaminants. Other media/systems would be required for those. The product is not intended to purify water.

11. TOXICOLOGICAL INFORMATION

Acute Toxicity: Expected to be non-toxic[1], not tested
Local Effects:
See section **3. HAZARDS IDENTIFICATION, Adverse Human Health Effects.**

Sensitization:
Primary skin irritation and corrosivity (rabbits): expected to be non-irritant[1], not tested
Eye irritation (rabbits): irritant[1]

Primary Route of Entry: Inhalation, ingestion, skin contact, eye contact

12. ECOLOGICAL INFORMATION

Not determined. See Section **3. HAZARDS IDENTIFICATION, Environmental Effects.**

13. DISPOSAL CONSIDERATIONS

Waste From Residues:
New product (media) can generally be disposed of in a landfill. Spent media that has removed toxic chemicals should be examined for specific hazards. Local regulations should always be consulted and followed.

Contaminated Packaging: Not relevant

14. TRANSPORT INFORMATION

International Regulations: Not Applicable
Proper Shipping Name: Not applicable

15. REGULATORY INFORMATION

Regulations:
This section contains information specifically applicable to the chemical product relative to the following regulations. Local regulations should always be consulted and followed.

SARA Title III (Superfund Amendments and Reauthorization Act)

Section 302 Extremely Hazardous Substances (40CFR355): Not listed

Section 312 Hazard Categories (40CFR370.2):
Only expected as Acute (eye irritant), see section **11 TOXICOLOGICAL INFORMATION**

Section 313 Reportable Ingredients (40CFR372):
The potassium permanganate portion of the media contains a high percentage (~97%) Manganese Compound as a part of the chemical structure (manganese compounds CAS Reg. No. N/A) and is subject to the reporting requirements of Section 313 of Title III, Superfund Amendments and Reauthorization Act of 1986 and 40CFR372.

16. OTHER INFORMATION

Disclaimer:
The information contained herein is accurate to the best of our knowledge. We do not suggest or guarantee that any hazards listed herein are the only ones, which exist. Purafil, Inc. makes no warranty of any kind, express or implied, concerning the safe use of this material in your process or in combination with other substances. Effects can be aggravated by other materials and/or this material may aggravate or add to the effects of other materials. The user has sole responsibility to determine the suitability of the material for any use and the manner of use contemplated.

[1] According to methods described in US Government Document 29CFR1910.1200.

Final Recommendation

The final recommendation is given below after discussions in the project weekly meeting dated 3rd November 2004.

The final recommendation is for Serpentine Road SP300 only and is based on the original recommendation process with a couple of modifications:

- Modification to the blower operation incorporating a VSD controlled from the proposed existing level transmitter
- A maximum flow of 250 L/s (replacing the original 360 L/s).

The basis of the design is that the pumps in the wet well have variable speed drives and hence the wet wells level will be kept fairly constant during operation and should only draw down and then fill during times of low flow. When the fill occurs it will be detected by the change in the level transmitter and the blower VSD drive will respond to increase the air flow to keep the wet well under negative pressure.

It was noted that activated carbon systems are best utilised where the conditions are as follows:

Low flow – High H_2S
High flow – Low H_2S

Therefore in this instance with the majority of the operation being with a small change in level within the wet well then the air changes can be low giving low flow. The H_2S levels as measured indicate that they will be high although this may not be the case in reality; this is yet to be determined. With this modified system the times of fill are anticipated to be low and so operation outside of the recommended range are not frequent and as such the life of the media should not be reduced significantly.

The Purafil system allows for 1 air change in normal operation and is a standard design that is used by the company world wide and they have extensive experience in running in these conditions. This has now been modified to allow a bigger unit incorporating a VSD motor which will detect rise in level in the wet well and ramp up the blower speed in order to maintain a flow that will continue to give a negative pressure.

The overflow flap valve has been calculated to require 80pa to open, but in this instance it does not really play a part as the wet well will be maintained under negative conditions.

This option is by far the most economical option.

The unit to be supplied is the DS-1000.

Opex and capex details

The anticipated capital cost for this unit will be $33,000 excluding GST.

The anticipated operating costs would be in the region of $10,000.

Operating philosophy

The Purafil units are based on dry chemical air filtration media technology. The drums are filled with multiple layers of media for a broad spectrum removal of sewage odours.

The unit comprises of:

- Polythene canister
- Media
- 3 media sampling ports
- VSD Blower
- Adjustable damper

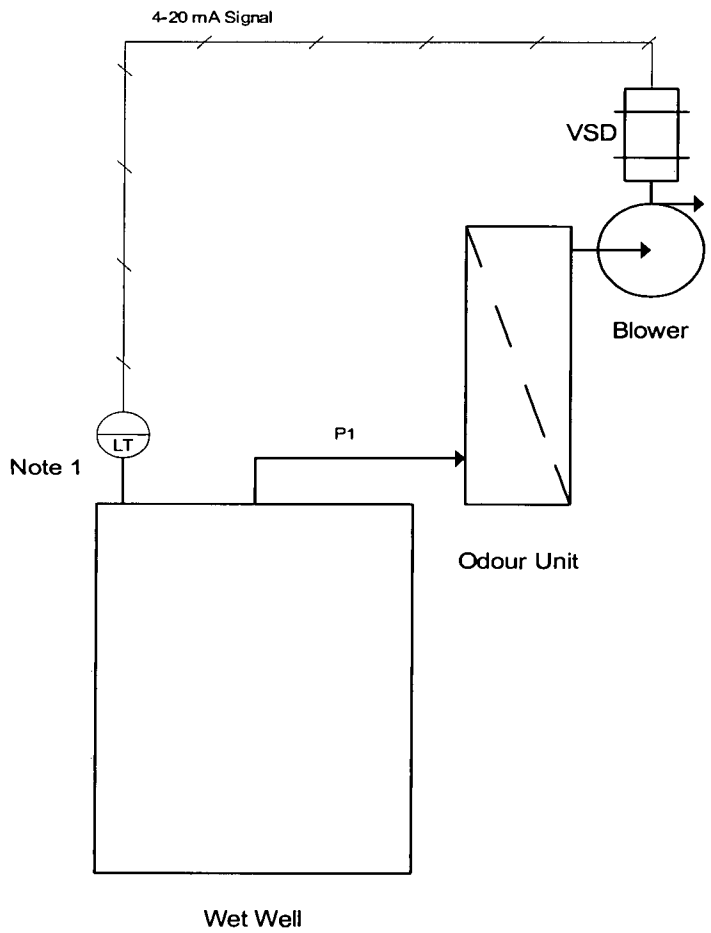

Note 1: Existing Level Transmitter

The units are sized to treat the volume of air calculated to give 1 air change per hour in normal operation. On fill mode the level transmitter will directly control the blower speed to increase the air flow being drawn out of the wet well.

The blower sucks polluted air directly from the top of the wet well.

The air is pulled through a packed media bed out to atmosphere.

The unit will give an efficiency of greater the 99.5% efficiency.

Life of the units

Purafil have developed a program called MediaPik which calculates the service life of the media against contaminant load, airflow and running times. This then uses the best appropriate media for the task, which in this case for H2S removal Odorcarb II of which has a capacity by weight of 35% for H2S.

Variable speed drives

The variable speed drive (VSD) in the Purafil unit is utilised to increase the air changes if required. It is believed the VSD will be housed in a local panel to the unit.

Mitchell, Frank

From: Maguire, Dean [DMaguire@pb.com.au]
Sent: Monday, 18 April 2005 11:55 AM
To: Mitchell, Frank
Subject: FW: Serpentine Road Odour Control Unit

Frank

FYI.

Dean Maguire
Principal Electrical Engineer
Parsons Brinckerhoff Australia Pty Limited
12th floor, IBM Centre
348 Edward Street
GPO Box 2907
Brisbane QLD 4001 Australia
tel: +61(0)7 3218 2222
direct: +61(0)7 3218 2645
fax: +61(0)7 3831 4223
mob +(61) 0417 738 551
email: dmaguire@pb.com.au
www.pb.com.au and www.pbworld.com

Everyone profits by delivering client outcomes on time

-----Original Message-----
From: Cameron, Ian
Sent: Thursday, 20 January 2005 9:29 AM
To: 'Peter Sherriff'
Cc: Maguire, Dean
Subject: RE: Serpentine Road Odour Control Unit

Thanks Peter for the comments

Ian Cameron
Executive - Water
Parsons Brinckerhoff Australia Pty Limited
12th floor, IBM Centre
348 Edward Street
GPO Box 2907
Brisbane QLD 4001 Australia
tel: +61(0)7 3218 2222
direct: +61(0)7 3218 2644
fax: +61(0)7 3831 4223
mob +(61) 0401 148 142
email: icameron@pb.com.au
www.pb.com.au and www.pbworld.com

Parsons Brinckerhoff (PB), formerly PPK Environment & Infrastructure, is a leading transport, infrastructure and environment consultancy and has been providing this service in Australia for over 38 years.

-----Original Message-----
From: Peter Sherriff [mailto:Peter.Sherriff@brisbane.qld.gov.au]
Sent: Thursday, 20 January 2005 9:23 AM
To: j.mcintosh@airepure.com.au; Maguire, Dean; Cameron, Ian; Mountney, Paul
Subject: Re: Serpentine Road Odour Control Unit

Dean,
My comments to your suggestion below is:
1. The low speed invoked for all periods when the wet well is not filling may not necessarily be "minimum" speed, but a lower speed speed determined to provide a negative pressure on the wet well.

2. In addition to the two digital status signals from the Blower VFD to the PLC, we will also monitor the analog speed of the VFD to verify correct speed operation.

Regards,
Peter.

>>> "Maguire, Dean" <DMaguire@pb.com.au> 19/01/2005 4:13:10 pm >>>

Following discussions with both James McIntosh of Airepure Australia and Peter Sherriff of Brisbane Water we have suggested modifications to the functional sec for the odour control unit.

We suggest that the control of the blower be modified such that a single binary signal is used in the speed control, rather than the analogue signal. The requirements for the blower speed control are either running at minimum speed or running at a predetermined faster speed. The minimum speed and fixed speed can be programmed at the VSD. The VSD will then be wired such that it operates continuously. The PLC in the pump station switchboard will monitor the well level and an algorithm shall be configured such that when the well is filling, the PLC shall energise an output which will instruct the VSD to run at a fixed speed.

We understand from our discussions that there is no advantage in providing variable modulation of the speed of the VSD, hence the use of an analogue signal will not be necessary.

Further, we suggest that in addition to a "Fault" input to the PLC, a "Running" input also be incorporated. The status and alarm would then be displayed on the SCADA screen.

Any questions, suggestions etc with the above, please advise.

Dean Maguire
Principal Electrical Engineer
Parsons Brinckerhoff Australia Pty Limited
12th floor, IBM Centre
348 Edward Street
GPO Box 2907
Brisbane QLD 4001 Australia
tel: +61(0)7 3218 2222
direct: +61(0)7 3218 2645
fax: +61(0)7 3831 4223
mob +(61) 0417 738 551
email: dmaguire@pb.com.au
www.pb.com.au and www.pbworld.com

Everyone profits by delivering client outcomes on time

Email Disclaimer: This document and any attachments ("this message") are confidential and may contain legally privileged information and/or copyright material.
This message must not be distributed and the information contained in it must not be disseminated, without the authority of the Parsons Brinckerhoff Group ("PB"). This message must not be altered other than by PB. The information contained in this message is intended for the use of the authorised recipient only. If you are not the authorised recipient of this message you must not read, copy, store or distribute this message, or disseminate or act in reliance upon the information

contained in it. If you have received this message in error, or you are not an authorised recipient, please either return e-mail to sender or telephone PB immediately on +61 2 9743 0333, and delete this message from your email system, and destroy any printed copies.

This message was received from the Internet.
Please exercise caution with the message and any attachments.

This message has passed through an insecure network.
Please direct all enquires to the message author.

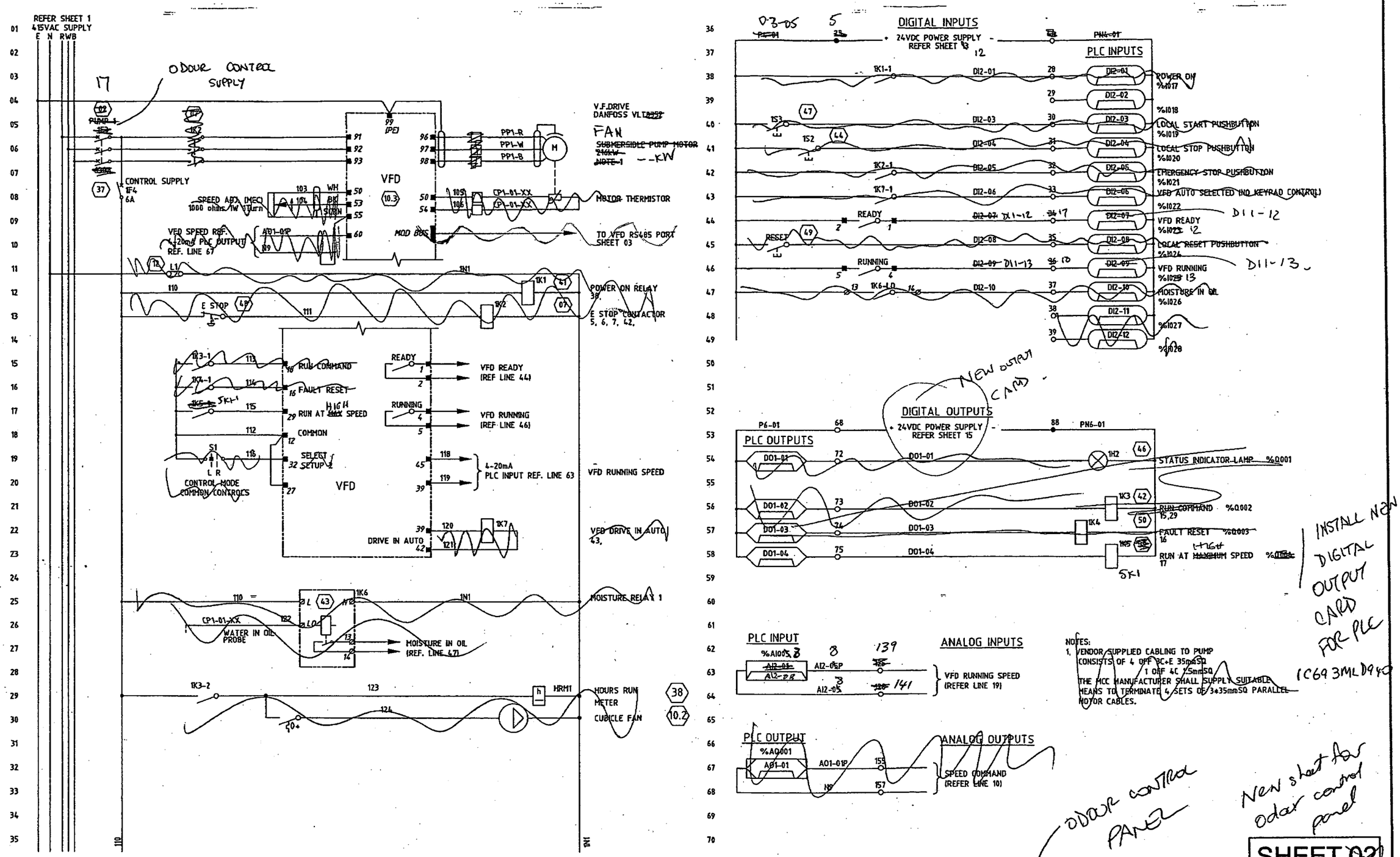

PROJECT	AUSTRALIA TRADE COAST SEWERAGE PROJECT		
ELECTRICAL MANAGER	R.P.E.Q. NO. 6832	DATE 10/04	
DESIGN MANAGER	R.P.E.Q. NO. 2241	DATE 10/04	
BW NETWORK DELEGATE		DATE	
CADD FILE		DESIGN	A.D. JUNE 2004
JOB FILE		DESIGN CHECK	B.J. JUNE 2004
SURVEYED		DRAWN	C.L. JUNE 2004
SURVEY NO.	FIELD BOOK	DRAFTING CHECK	B.J. JUNE 2004

NO.	DATE	AMENDMENT	INITIALS
0	10/09/04	ISSUE FOR CONSTRUCTION	

Plot Date: 11/10/04 - 10:45 Cad File: I:\2138110B Trade Coast Sewerage post-Award\DRF\ACAD\FINAL\XREF\PD\Serpentine Road\NEW\TR201-052102.dwg

Cardno MBK (Qld) Pty Ltd — Level 1, 6 Gardner Close, Milton 4064. TELEPHONE (07) 3369 9822 FAX (07) 3369 9722 Email cardno@cardno.com.au

PB PARSONS BRINCKERHOFF — 12th Floor IBM Centre 345 Edward Street Brisbane QLD. 4000 — GPO BOX 2907 Brisbane QLD. 4000 Australia — ABN 84 797 323 435 Telephone +61 7 3218 2222 Facsimile +61 7 3831 6223 Email: brisbane@pb.com.au

LEIGHTON — Level 3, 143 Coronation Drive, Milton 4064. TELEPHONE (07) 3215 4400 FAX (07) 3215 4420 www.leightoncontractors.com.au

Brisbane Water

PROJECT: SERPENTINE ROAD SEWAGE PUMPING STATION

TITLE: SP300 ~~PUMP 01~~ SCHEMATIC DIAGRAM

BW CONTRACT No.	30137-02/03
LEIGHTON JOB No.	Q1112
PB JOB No.	2138110B
SCALE	N.T.S.
A.H. DATUM	
SHEETS	No. 28 OF 53
DRAWING No.	486/5/7-TR201/052
AMEND.	0

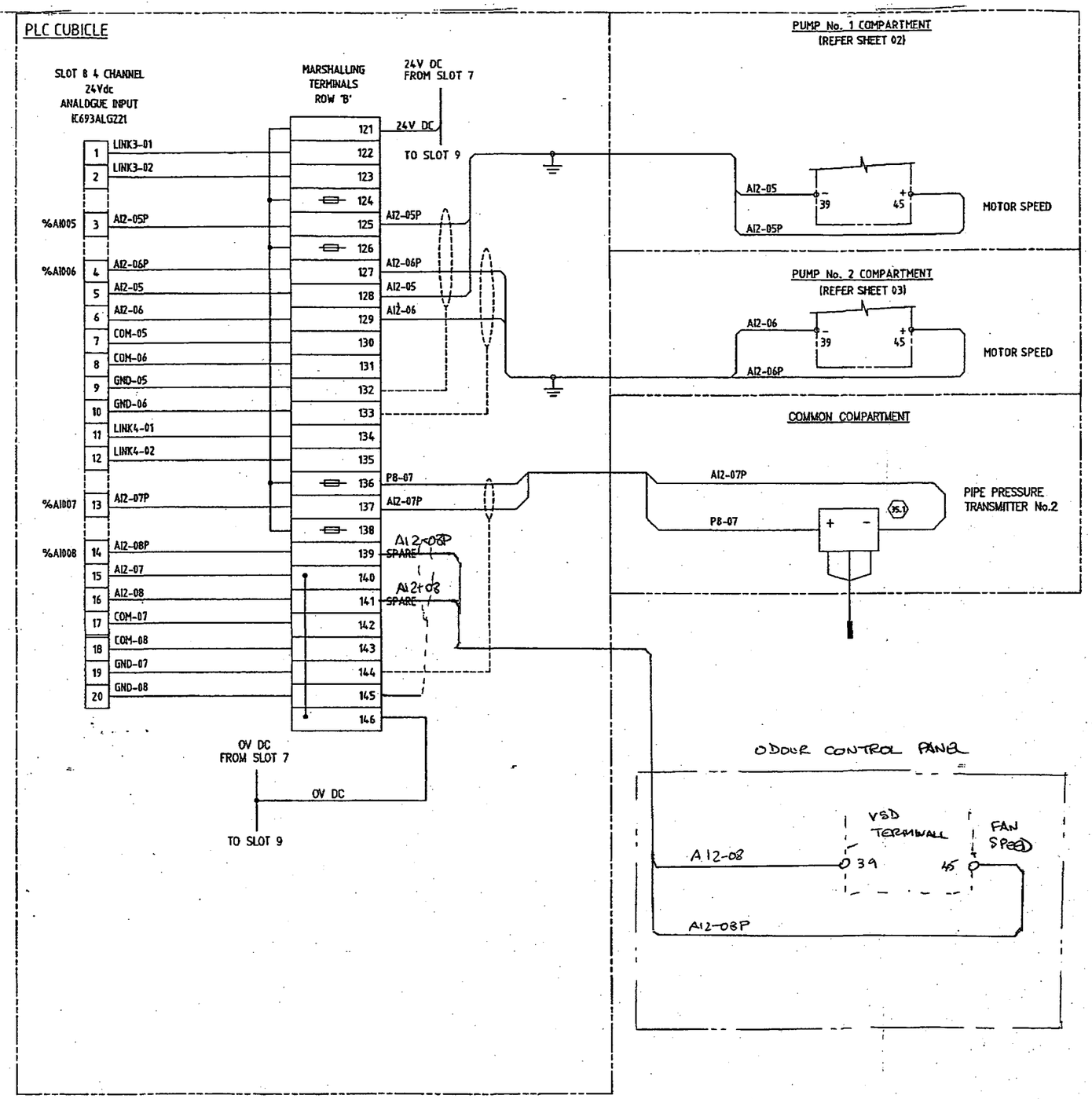

NOTE

ALL FUSES ARE 500mA EXCEPT WHERE NOTED OTHERWISE.

SHEET 17

PROJECT	AUSTRALIA TRADE COAST SEWERAGE PROJECT		
ELECTRICAL MANAGER	R.P.E.Q. NO. 5832	DATE 10/04	
DESIGN MANAGER	R.P.E.Q. NO. 3241	DATE 10/04	
BW NETWORK DELEGATE		DATE	

NO.	DATE	AMENDMENT	INITIALS
0	10/09/04	ISSUE FOR CONSTRUCTION	

CADD FILE			DESIGN	A.D.	JUNE 2004
JOB FILE			DESIGN CHECK	B.J.	JUNE 2004
SURVEYED			DRAWN	C.L.	JUNE 2004
SURVEY NO.		FIELD BOOK	DRAFTING CHECK	B.J.	JUNE 2004

Plot Date: 11/10/04 - 10:47 Cad File: I:\2138110B Trade Coast Sewerage post-Award\DRF\ACAD\FINAL\XREF\PD\SerpentineRoad\XEW\TR201-067(17).dwg

Cardno MBK — Cardno MBK (Qld) Pty Ltd — Level 1, 5 Gardner Close, Milton 4064. TELEPHONE (07) 3369 8622 FAX (07) 3369 9722 Email cardno@cardno.com.au

PB PARSONS BRINCKERHOFF — 12th Floor IBM Centre 348 Edward Street Brisbane QLD. 4000 — GPO BOX 2907 Brisbane QLD. 4000 Australia — ABN 84 797 323 433 Telephone +61 7 3218 9222 Facsimile +61 7 3831 6223 Email: brisbane@pb.com.au

LEIGHTON — Level 3, 143 Coronation Drive, Milton 4064. TELEPHONE (07) 3215 4400 FAX (07) 3215 4480 www.leightoncontractors.com.au

Brisbane Water

PROJECT: SERPENTINE ROAD SEWAGE PUMPING STATION

TITLE: SP300 PLC ANALOGUE INPUTS SLOT 8

BW CONTRACT No.	30137-02/03
LEIGHTON JOB No.	Q1112
PB JOB No.	2138110B
SCALE	N.T.S.
A.H. DATUM	
SHEETS	No. 43 OF 53
DRAWING No.	486/5/7-TR201/067
AMEND.	0

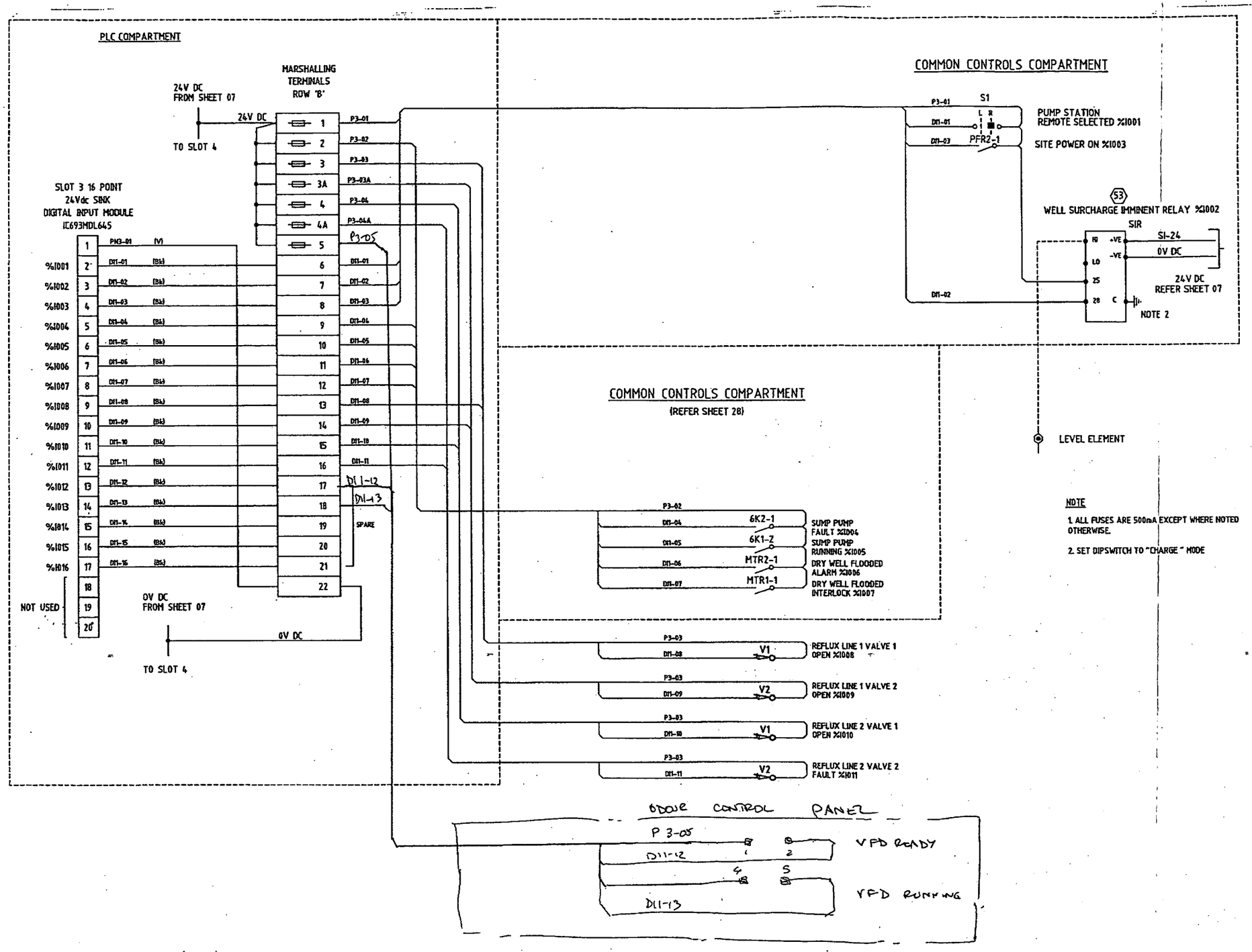

NOTE

1. ALL FUSES ARE 500mA EXCEPT WHERE NOTED OTHERWISE.
2. SET DIPSWITCH TO "CHARGE" MODE

SHEET 12

PROJECT	AUSTRALIA TRADE COAST SEWERAGE PROJECT		
ELECTRICAL MANAGER	R.P.E.Q. NO. 8832	DATE 10/04	
DESIGN MANAGER	R.P.E.Q. NO. 2241	DATE 10/04	
BW NETWORK DELEGATE		DATE	
0 10/09/04	ISSUE FOR CONSTRUCTION		
NO. DATE	AMENDMENT	INITIALS	

CADD FILE		DESIGN	A.D. JUNE 2004
JOB FILE		DESIGN CHECK	B.J. JUNE 2004
SURVEYED.		DRAWN	C.L. JUNE 2004
SURVEY NO.	FIELD BOOK	DRAFTING CHECK	B.J. JUNE 2004

Plot Date: 11/10/04 - 10:46 Cad File: E:\2138110B Trade Coast Sewerage post-Award\DRF\ACAD\FINAL\XREF\PO\Serpentine Road\NEW\TR201-062(12).dwg

Cardno MBK (Qld) Pty Ltd — Level 1, 5 Gardner Close, Milton 4064. TELEPHONE (07) 3369 9822 FAX (07) 3369 9722 Email:cardno@cardno.com.au

PB PARSONS BRINCKERHOFF — 12th Floor IBM Centre 348 Edward Street Brisbane QLD. 4000. GPO BOX 2907 Brisbane QLD. 4000 Australia. ABN 84 797 323 433 Telephone +61 7 3218 2222 Facsimile +61 7 3831 4223 Email: brisbane@pb.com.au

LEIGHTON — Level 3, 143 Coronation Drive, Milton 4064. TELEPHONE (07) 3215 4400 FAX (07) 3215 4450 www.leightoncontractors.com.au

Brisbane Water

PROJECT: SERPENTINE ROAD SEWAGE PUMPING STATION

TITLE: SP300 PLC DIGITAL INPUTS SLOT 3

BW CONTRACT No.	30137-02/03
LEIGHTON JOB No.	Q1112
PB JOB No.	2138110B
SCALE	N.T.S.
A.H. DATUM	
SHEETS	No. 38 OF 63
DRAWING No.	486/5/7-TR201/062
AMEND.	O

Mitchell, Frank

From: Paterson, Jason
Sent: Monday, 21 February 2005 2:50
To: Mitchell, Frank
Subject: FW: Details odour scrubber

Frank,

the contact for the odour scrubber supply is James McIntosh (contact number below). This is the email he sent me with the current information and the price breakup he has supplied to date is the following:

1 only DS-1000 c/w media @ $28,500.00
1 only VFD c/w housing to suit $3,000.00

Total Price: $31,500.00 + GST

To date i have not gone any further than ordering the DS-1000 unit from the States. We still have to finalise all of this detail with him so it would probably be better for you to ring him to organise what he needs to include into the works and supply us with a final price. He has also been speaking to Paul Mountney so he has got some idea of what we wanted. Once the price and scope is determined we can give him purchase order.

If you would like to discuss further please give me a call.

Also Style are opening the crates to look at the Serpentine pumps tomorrow morning if you are interested.

Jason

-----Original Message-----
From: James McIntosh [mailto:j.mcintosh@airepure.com.au]
Sent: Tuesday, 1 February 2005 1:59 PM
To: Paterson, Jason
Subject: Re: Details

Jason,

Pls find attached details on the Purafil DS-1000 Drum Scrubber, included is sales literature, mech drawing & specification. Re exit pipework I presume you mean the entry point for your pipework into the unit. I have had a look on the drawing and this detail is probably not as clear as we would like, have requested further details from Purafil. Should have something back by tomorrow, along with a lead time.
Also attached is a drawing for a slab we used for two smaller units, suggest you use something similar, just increase platform to accommodate larger DS-1000 unit.
If you need anything else please let us know.

MOTOR VOLTAGE ~
KW -

Best regards,

James McIntosh
Airepure Australia
Ph. (03) 9562 0011
Fax. (03) 9562 1177
Email. j.mcintosh@airepure.com.au

VSD DETAIL, TECH DATA, HOUSING
VLT 6004, 6A, 105 7600 RITTAL
700H
AE ENCLOSURE 500 W
MOUNTING. 250 D.
IP66 EXT FIX LUGS.

MODEL SZ 2493.00
LOCK COVER. X 2
WALL BRKT KL 1594.00 x 4

> ----- Original Message -----
> **From:** Paterson, Jason
> **To:** j.mcintosh@airepure.com.au
> **Sent:** Tuesday, February 01, 2005 1:09 PM
> **Subject:** Details

James,

further to our conversation i am the person that will be ordering the odour scrubber from you for the Australia Trade Coast Sewer Project in Brisbane. I will speak to Paul from PB to find out if there is anything outstanding and if not i will forward an email confirming the order .This will be followed with a Supply Contract for you to sign and return. Can you please forward a detail of the unit showing the dimensions of the exit pipework and also the availability of the unit.

Can you also please let me know who i should speak if you are uncontactable and i have attached all of my details.

Jason Paterson

Project Engineer

.....

Leighton Contractors Pty Limited

ABN 98 000 893 667

Australia Trade Coast Sewer Project

1051 Lytton Road, Hemmant 4174

PO Box 288 Toowong QLD 4066 Australia
T: +61 7 3907 8512

F: +61 7 3907 8555

M: 0402 315 480

E: jason.paterson@leicon.com.au

www.leightoncontractors.com.au

.....

****

This email and any files transmitted with it are confidential and intended for use by the Addressee only. The confidential nature of the information contained in the email and/or file is not waived, lost or destroyed if it is sent in error to other than the Addressee.

Use or dissemination of the information contained in the email and/or files by a recipient other than the Addressee may cause commercial damage to both/either the Sender and/or Addressee.

If you are not the Addressee of this email/files please immediately contact the Sender and delete this email/files.

****

Purafil ESD Drum Scrubber - 1000

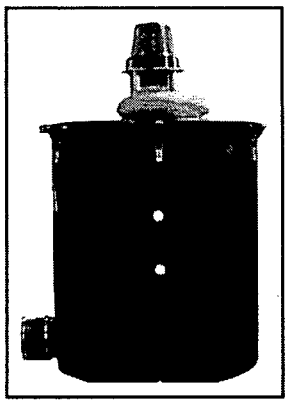

Manufactured by Purafil Environmental Systems Division (ESD), the Drum Scrubber–1000 (DS-1000) is ideal for removal of odorous gases found at pump stations, lift stations, wet wells, force mains, and even at the wastewater treatment plant. Recommended for moderate-load applications, the DS-1000 is sized for airflows up to 1000 cfm.

Construction: The DS-1000's polyethylene canister measures 52 inches (132.1 cm) in diameter, 79.5 inches (201.9 cm) in height (including blower), and 1/4-inch (6.4 mm) in thickness. The unit is mounted on a 60-inch square aluminum skid.

Media: At the core of ESD's high-efficiency odor control systems are dry-chemical air filtration medias. The DS-1000 is bulk filled with multiple layers of Odoroxidant™, Odorcarb™ II, and Odormix™ media for broad-spectrum removal of sewage odors at 99.5+% efficiencies.

Applications

- Pump Stations
- Lift Stations
- Wet Wells
- Force Mains
- Head Works
- Aerobic Digesters
- Clarifiers
- Sludge Dewatering

Targeted Odors/Gases

- Hydrogen sulfide
- Ammonia
- Aldehydes
- Sulfur dioxide
- Mercaptans
- Organic compound

System Advantages

Corrosion-Resistant Housing: The DS-1000 is constructed of corrosion-resistant materials and requires essentially no maintenance, making it ideal for remote, outdoor applications or areas where high levels of acid gases are present.

Low Maintenance: The DS-1000 has only one moving part—a blower. Other than routine service checks, no maintenance is required to ensure maximum scrubber performance. The expected service life of the DS-1000 is nine months to one year, depending on the contaminant level.

Complete Gas Removal: Purafil ESD's Odoroxidant, Odorcarb II, and Odormix media offer broad-spectrum removal of sewage odors. By using these media in combination, users are assured of complete odor control.

Media Sampling Ports: Three media sampling ports, located on the side of the DS-1000, allow for easy access to the media beds. Upon receiving the samples, Purafil ESD's laboratory performs a complimentary Media Life Analysis to project remaining service life. Timely replacement of spent media is critical in preventing odor breakthrough.

Local Service: Purafil ESD's network of local representatives offers convenient and timely service. These factory-trained representatives work in conjunction with ESD's in-house laboratory to provide comprehensive technical service.

Standard Features:

- Linear, low-density, polyethylene canister (¼-inch in thickness)
- Odoroxidant, Odorcarb II, and Odormix media (39 ft^3)
- Integrated motor housing
- Totally Enclosed Fan Cooled (TEFC) motor
- High-density, rotomolded, polypropylene motor/blower assembly
- Adjustable damper (PVC)
- Stainless steel and rubber latches
- Stainless steel fasteners
- Thermoplastic packing and FRP lid
- Polypropylene impellers and motor shaft bushings
- Integrated rainhood
- Fernco flexible coupling at inlet
- Polyethylene inlet (10-inch pipe diameter)
- Airflows up to 1000 cfm

Optional Features

- Other Purafil ESD media

Other System Advantages

- System media are UL Classified Class 1 and 2.
- Spent media is landfill disposable.
- Maintains superior performance in climates with fluctuating temperature and relative humidity.

PURAFIL Environmental Systems Division

2654 Weaver Way • Doraville, Georgia 30340 • Phone: (770) 662-8545 • Fax: (770) 263-6922 • www.purafil.com

SUGGESTED SPECIFICATIONS - DS-1000

DRUM SCRUBBER – 1,000 CFM

For use with drawing AW-121703 Rev. B

PURAFIL Environmental Systems Division

1. GENERAL

1.01 Intent

A. It is the intent of these Suggested Specifications to give the Contractor/Engineer the descriptions of the equipment, instructions for delivers, and installation of the Purafil Drum Scrubber-1,000cfm (DS-1000) as manufactured by Purafil, Inc. Doraville, Georgia or equal.

B. The Contractor/Engineer is advised that all drawings shall be for general reference.

C. The Contractor/Engineer shall provide all equipment and work indicated below unless otherwise noted and any additional work to produce a completely finished job as required by the Engineer.

2. PRODUCTS

2.01 General

A. This specification defines the requirements for a Drum Scrubber-1,000cfm (DS-1000) as manufactured by Purafil, Inc. Doraville, Georgia or equal.

B. The DS-1000 consists of dry scrubbing media contained in a 550-gallon, linear, low density, polyethylene drum with a blower mounted on top of a FRP lid.

C. The DS-1000 shall contain 39 ft^3 (0.96 m^3) of Odoroxidant™, Odorcarb™ II, and Odormix™ media. The DS-1000 shall contain 400 pounds (183 kg) of impregnated activated alumina, Odoroxidant media, 945 pounds (431 kg) of impregnated activated carbon, Odorcarb II Media, followed by 400 pounds (183 kg) of a 50/50 volume blend of activated carbon and active-oxidant impregnated alumina, Odormix Media, as manufactured by Purafil, Inc.

D. The DS-1000 shall be designed to operate at 99.5+% gas removal efficiencies.

E. The airflow capacity shall range from 800 cfm (1,360 m^3/hr) to 1,100 cfm (1,870 m^3/hr)

F. The configuration shall be arranged so that the contaminated air shall flow into the bottom inlet plenum and be drawn upwards through the media bed. Treated air shall discharge out the top of the vessel through a centrifugal air ventilator.

G. All components of the DS-1000 shall include:

1. 550-gallon, linear, low density, polyethylene drum and FRP lid
2. 1,745 pounds (796 kg) of dry scrubbing media
3. Polypropylene blower section with damper

2.02 Drum

A. The drum material shall be linear, low density, polyethylene, 1/4" (6.4mm) in thickness.

B. The drum shall have a capacity of 550 gallons and measure 52" (132.1 cm) in diameter and 60" (152.4 cm) in height.

C. Latches shall be stainless steel and rubber.

D. Fasteners shall be stainless steel.

E. The drum shall contain 39 ft^3 (1.10 m^3) of Odoroxidant, Odorcarb II and Odormix medias as manufactured by Purafil, Inc.

F. The drum shall be provided with two media sampling ports, each measuring one inch in diameter.

G. The media shall be supported by an FRP air diffuser and surrounded by thermoplastic packing and will contain a mist eliminator to remove moisture.

H. Polymedia filters shall be used to separate the thermoplastic packing from the Odorcarb II media, the blower from the Odormix media, and to separate the layers of media.

I. The inlet shall have a 8" (203.2 mm) FERNCO flexible coupling.

J. The drum shall have a 0.75" (19 mm) dia. drain pipe.

2.03 Blower Section

A. The blower shall be sized to deliver 1,000 cfm (1,700 m^3/hr)

B. The blower/motor shall be covered with an FRP rainhood.

C. The blower shall consist of a direct drive motor-fan assembly.

D. The motor shall be a 3.0 hp, 3450 RPM, 115/230 volt / 1 phase/ 60 Hz TEFC motor.

E. The unit comes ready to be field wired.

2.04 Chemical Media

A. The DS-1000 shall contain 8 ft^3 (0.22 m^3) of Odoroxidant media, 21 ft^3 (0.58 m^3) of Odorcarb II Media, and 10 ft^3 (0.28 m^3) Odormix Media as manufactured by Purafil, Inc.

2654 Weaver Way • Doraville,GA 30340 • (Toll-Free) 1-800-222-6367 • (Phone) 770-662-8545 • (Fax) 770-263-6922
Email:purafil@purafil.com • www.purafil.com

B. The Odoroxidant™ Media shall consist of manufactured, generally spherical, porous pellets. Pellets shall be formed from a combination of activated alumina and other binders, suitably impregnated with potassium permanganate to provide optimum adsorption, absorption, and oxidation of a wide variety of gaseous contaminants. The potassium permanganate shall be applied during pellet formation, such that the impregnant is uniformly distributed throughout the pellet volume and is totally available for reaction.

C. Odoroxidant Media shall have the following physical properties:
   1. Moisture content: 35% maximum
   2. Average crush strength: 35% minimum - 70% maximum
   3. Average abrasion: 4.5% maximum
   4. Bulk density: 50 lbs/ft^3 (800 kg/m^3)
   5. Nominal pellet diameter: 1/8" (3.2 mm)
   6. Potassium permanganate content: 8% minimum

D. Odoroxidant Media shall be UL Classified Class 1.

E. Odoroxidant Media shall be capable of absorbing and removing odorous gases throughout the entire pellet.

F. The Odorcarb™ II Media shall consist of manufactured, generally spherical porous pellets. The pellets shall be formed from a combination of powered activated carbon, alumina, and other binders suitably impregnated with chemicals to enhance the capacity for removal of odorous gases. The pellets shall also chemically react to produce solid reaction products within the media. Impregnants shall be applied during pellet formation such that the impregnant is uniformly distributed throughout the pellet volume.

G. Odorcarb II Media shall have the following physical properties:
   1. Moisture content: 35% maximum
   2. Average crush strength: 35% minimum - 70% maximum
   3. Average abrasion: 4.5 maximum
   4. Bulk density: 45 lbs/ft^3 (721 kg/m^3)
   5. Nominal pellet diameter: 1/16" – 1/8" (1.587mm)

H. Odorcarb II Media shall be UL Classified Class 2.

I. Odorcarb II Media shall be capable of absorbing and removing odorous gases throughout the entire pellet.

J. The Odormix™ Media shall consist of an equal mix (by volume) of Odoroxidant Media and Odorkol Media. Odoroxidant Media shall be manufactured of generally spherical, porous pellets formed from a combination of powdered activated alumina and other binders, suitably impregnated with potassium permanganate to provide optimum adsorption, absorption, and oxidation of a wide variety of gaseous contaminants. The potassium permanganate shall be applied during pellet formation, such as the impregnant is uniformly distributed throughout the pellet volume and is totally available for reaction. Odorkol Media shall be a premium grade, activated carbon with a high surface area available for adsorption.

K. Odormix Media shall have the following physical properties:
   1. <u>Odoroxidant Media</u>
      - Moisture content: 35% maximum
      - Average crush strength: 35% minimum - 70% maximum
      - Average abrasion: 4.5% maximum
      - Bulk density: 50 lbs/ft^3 (800 kg/m^3)
      - Nominal pellet diameter: 1/16" (1.587mm)
      - Potassium permanganate content: 8% minimum

   2. <u>Odorkol Media</u>
      - Moisture content: 5.0% maximum
      - CTC: 55 minimum
      - Base material: activated carbon
      - Bulk density: 30-32 lbs/ft^3 (480-512 kg/m^3)
      - Odormix Media shall be UL Classified Class 1.

L. ANALYTICAL SERVICES

a. Media Sampling and Analysis

i. The manufacturer shall, after start up, shall analyze media samples to predict the remaining service life of system media. Such service will be provided as needed at the manufacturer's expense.

M. MANUFACTURER

a. Purafil, Inc.

i. The manufacturer shall have a minimum of ten (10) years experience in the design, fabrication, and testing of systems that are 99.5+% efficient at removing gaseous contaminants.

ii. The manufacturer shall be a single source provider of equipment, media, and testing services and be certified to ISO-9001 standards.

iii. The manufacturer shall have local, factory-trained representatives.

iv. The manufacturer shall be Purafil, Inc. of Doraville, Georgia.

2654 Weaver Way • Doraville,GA 30340 • (Toll-Free) 1-800-222-6367 • (Phone) 770-662-8545 • (Fax) 770-263-6922
Email:purafil@purafil.com • www.purafil.com

Environmental Systems
A Division of Purafil, Inc.
2654 WEAVER WAY
DORAVILLE, GA 30340
(770)662-8545

1000 CFM DRUM SCRUBBER
WITH BLOWER & RAINHOOD

JOB/UNIT IDENTIFICATION:

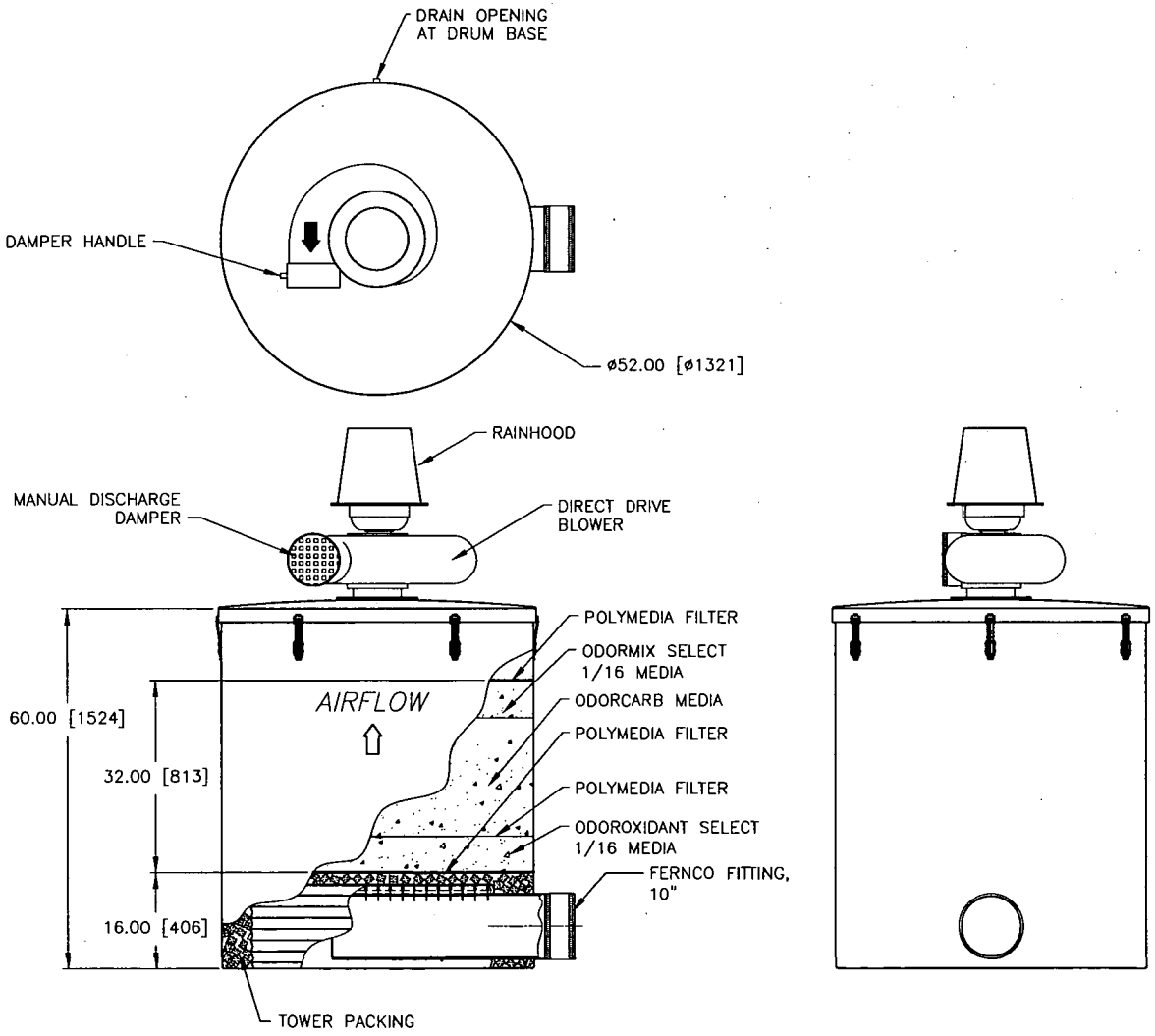

MODEL #: DS-1000

MATERIAL: DRUM – LOW DENSITY POLYETHYLENE

FINISH: DRUM – BLACK

ELECTRICAL:

VOLTS	PH	HZ	HP	TYPE
(STD) 115/230	1	60	3.0	TEFC

MAX RECOMMENDED AIRFLOW:

1500 CFM W/2.25 IWG ESP AVAILABLE

MIST ELIMINATOR:

TYPE	QTY	SIZE
NONE		

PURAFIL® AIR PURIFICATION MEDIA(S) IN DIRECTION OF AIRFLOW:

MEDIA TYPE	TOTAL MEDIA
ODOROXIDANT SELECT 1/16	400 LB [181 KG]
ODORCARB	945 LB [429 KG]
ODORMIX SELECT 1/16	400 LB [181 KG]

INLET CONNECTION:

10.0" [254mm] INLET

FOR APPROVAL
FOR CONSTRUCTION
FOR INFORMATION
AS BUILT

DATE: 07/01/04

REV DATE:

APPROXIMATE OPERATING WEIGHT: 1938 LB [879 KG]

APPROVED BY: AAY/BLG

DRAWING NUMBER: CC-070104

REVISION: –

This drawing is the property of Purafil, Inc. and is not to be reproduced or copied in whole or in part. It is only to be used for the project and site specifically identified herein and is not to be used in any other project. It is to be returned upon request.

DIMENSIONS ARE IN INCHES. METRIC EQUIVALENTS IN BRACKETS [ ] ARE IN MILLIMETERS.

PURAFIL, INC. RESERVES THE RIGHT TO MODIFY DESIGN FOR IMPROVED PRODUCT PERFORMANCE.
PURAFIL®, PURAFIL II®PURASORB®, CHLOROSORB®, AND THE SCOOTER® SKUNK EMBLEM (REG. U.S.PAT. & TM OFFICE),PURASTAT™, HEBA-LOCK™, CORROSIVE-AIRE™,E.S. ™,PURACARB™,PM™ SERIES AND THE DISTINCTIVE SHAPE OF PM™ MODULES ARE TRADEMARKS OF PURAFIL® INC.,A U.S.A.CORPORATION.

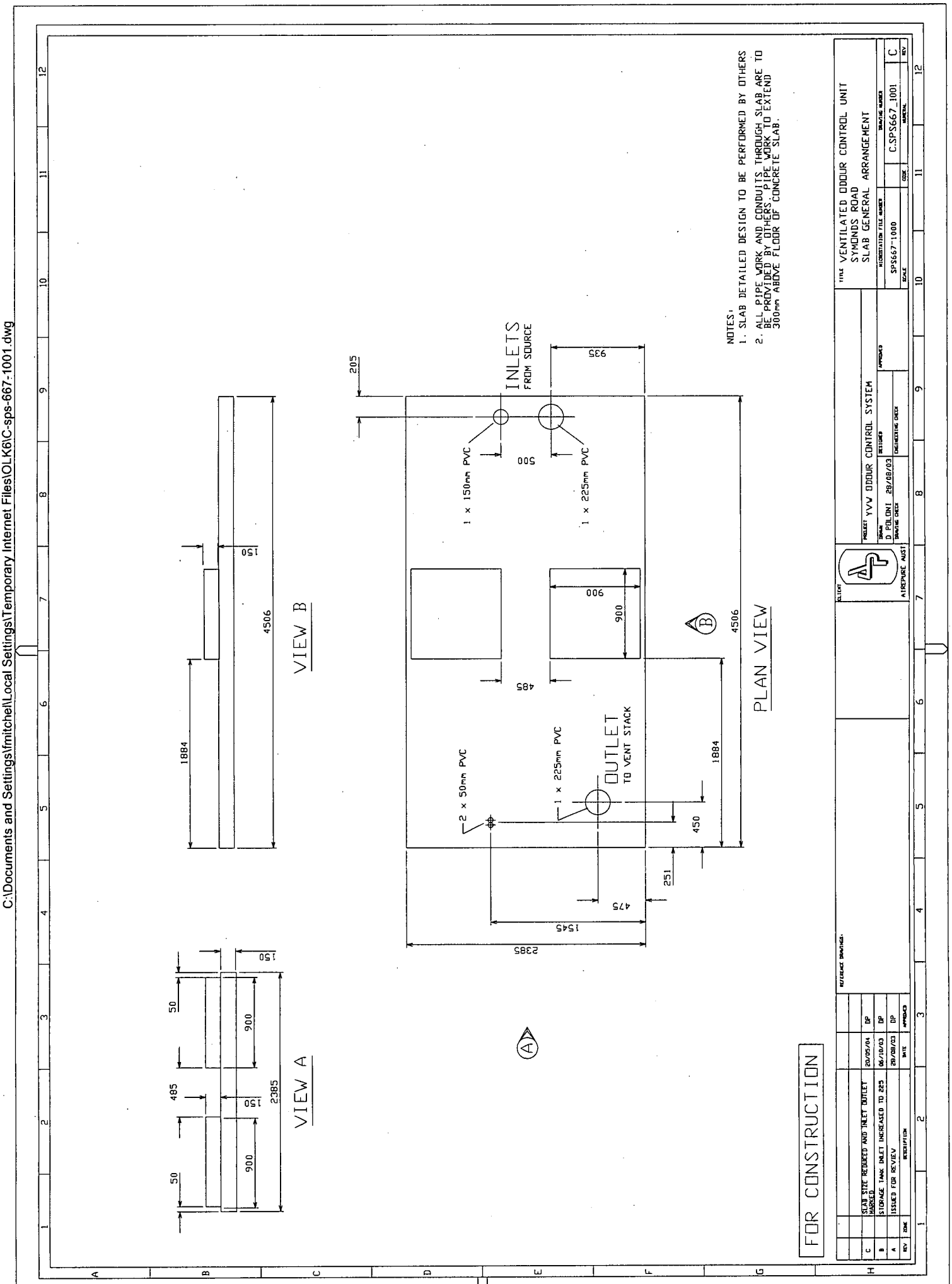
C:\Documents and Settings\fmitchel\Local Settings\Temporary Internet Files\OLK6\C-sps-667-1001.dwg
NOTES:
1. SLAB DETAILED DESIGN TO BE PERFORMED BY OTHERS
2. ALL PIPE WORK AND CONDUITS THROUGH SLAB ARE TO BE PROVIDED BY OTHERS. PIPE WORK TO EXTEND 300mm ABOVE FLOOR OF CONCRETE SLAB.
INLETS
FROM SOURCE
1 x 150mm PVC
1 x 225mm PVC
OUTLET
TO VENT STACK
2 x 50mm PVC
1 x 225mm PVC
VIEW A
VIEW B
PLAN VIEW
FOR CONSTRUCTION
TITLE VENTILATED ODOUR CONTROL UNIT
SYMONDS ROAD
SLAB GENERAL ARRANGEMENT
SPS667-1000
C.SPS667_1001
C
PROJECT YVW ODOUR CONTROL SYSTEM
D POLONI 28/08/03
AIREPURE AUST
C SLAB SIZE REDUCED AND INLET OUTLET MARKED 20/05/04 DP
B STORAGE TANK INLET INCREASED TO 225 06/10/03 DP
A ISSUED FOR REVIEW 28/08/03 DP

Mitchell, Frank

From: Whybrow, James
Sent: Thursday, 14 October 2004 12:02 PM
To: Mitchell, Frank
Subject: FW: Odour Unit Design Basis---ATC SEWERAGE PROJECT

Have a look at this.
-----Original Message-----
From: Cameron, Ian [mailto:ICameron@pb.com.au]
Sent: Thursday, 14 October 2004 11:47 AM
To: Whybrow, James
Cc: Bowyer, Victor
Subject: FW: Odour Unit Design Basis---ATC SEWERAGE PROJECT

James,

Please find attached our recommendation for odour scrubbers for the project, using the same brand recommended by The Odour Unit.(we called 3 quotes)

Please review and advise your comments viz. your budget for the odour and septicity works.

Note we have not included installation costs for the units, or the VSD on the blowers which would aid extending the life of the activated carbon.

After I receive your comments , I will submit info. to John Bower for BW approval of the units.

Following confirmation of the units , we will revise the civil dwgs , as required

Thanks,

Regards,

Ian Cameron
Executive - Water
Parsons Brinckerhoff Australia Pty Limited
12th floor, IBM Centre
348 Edward Street
GPO Box 2907
Brisbane QLD 4001 Australia
tel: +61(0)7 3218 2222
direct: +61(0)7 3218 2644
fax: +61(0)7 3831 4223
mob +(61) 0401 148 142
email: icameron@pb.com.au
www.pb.com.au and www.pbworld.com

Parsons Brinckerhoff (PB), formerly PPK Environment & Infrastructure, is a leading transport, infrastructure and environment consultancy and has been providing this service in Australia for over 38 years.

-----Original Message-----

From: Mountney, Paul

Sent: Thursday, 14 October 2004 11:33 AM

To: Cameron, Ian

Subject: Odour Unit Design Basis

Ian,

The following document was emailed to the suppliers.

Regards

Paul

<<Odour Design Information.doc>>

Paul Mountney
Principal Process Engineer
Parsons Brinckerhoff Australia Pty Limited
12th floor, IBM Centre
348 Edward Street
GPO Box 2907
Brisbane QLD 4001 Australia
tel: +61(0)7 3218 2222
direct: +61(0)7 3218 2636
fax: +61(0)7 3831 4223
mob +(61) 0439 803 150
email: pmountney@pb.com.au
www.pb.com.au and www.pbworld.com

Everyone profits from delivering client outcomes on time

Email Disclaimer: This document and any attachments ("this message") are confidential and may contain legally privileged information and/or copyright material.
This message must not be distributed and the information contained in it must not be disseminated, without the authority of the Parsons Brinckerhoff Group ("PB"). This message must not be altered other than by PB.
The information contained in this message is intended for the use of the authorised recipient only. If you are not the authorised recipient of this message you must not read, copy, store or distribute this message, or disseminate or act in reliance upon the information contained in it. If you have received this message in error, or you are not an authorised recipient, please either return e-mail to sender or telephone PB immediately on +61 2 9743 0333, and delete this message from your email system, and destroy any printed copies.

Please size and select the appropriate odour treatment units for the three pumping stations detailed below.

Information required for each unit is:

1. Confirm basis of design including air changes
2. Price
3. Delivery time
4. Slab footprint required
5. Carbon replacement details
6. Air changes
7. Fan motor size and duty.
8. Any other appropriate details.

The pumps have VSD's and so the level in the wet wells should stay constant and will only draw down during low flow situation.

The three pump stations are as follows:

1. Lytton Road SP298

Description	Details	Units
Size of Wet Well	53	m^3
Sewage Flows into the Wet Well	160	L/s
Contaminants	180 Max	ppm
	5 Min	ppm
	90 Average	ppm
Containments	Wet Well is sealed and will need air inlet, with appropriate odour protection if applicable.	
Vent Stack Requirements	Supplier to recommend if required and detail.	-
Life Requirements of Carbon	To be Advised by supplier (12 months would be preferred)	Months
Quality of Treated Air	No detectable odour	-
Footprint Available (Slab Size)	2000 x 2000	mm

2. Viola Place SP299

Description	Details	Units
Size of Wet Well	58	m^3
Sewage Flows into the Wet Well	104	L/s
Contaminants	195 Max	ppm
	10 Min	ppm
	90 Average	ppm
Containments	Wet Well is sealed and will need air inlet, with appropriate odour protection if applicable.	
Vent Stack Requirements	Supplier to recommend if required and detail.	-
Life Requirements of Carbon	To be Advised by supplier (12 months would be preferred)	Months
Quality of Treated Air	No detectable odour	-
Footprint Available (Slab Size)	2000 x 2000	mm

3. Serpentine Road SP300

Description	Details	Units
Size of Wet Well	108	m^3
Sewage Flows into the Wet Well	348	L/s
Contaminants	180 Max	ppm
	6 Min	ppm
	93 Average	ppm
Containments	Wet Well is sealed and will need air inlet, with appropriate odour protection if applicable.	
Vent Stack Requirements	Supplier to recommend if required and detail.	-
Life Requirements of Carbon	To be Advised by supplier (12 months would be preferred)	Months
Quality of Treated Air	No detectable odour	-
Footprint Available (Slab Size)	2500 x 2000	mm

Purafil ESD Mediapik Basic Report

10-12-2004

Reference Job Name: Viola Place SP299

Gases/Odors	ppm
hydrogen sulfide	90

Airflow: 58 m3/hr **Hours per Day:** 24 **Days per Week:** 7

Estimated Media Usage Summary

	3 Months	6 Months	12 Months	24 Months
Odorcarb II	45 kgs	90 kgs	181 kgs	362 kgs

Local Rep: PURAFIL INC., (770)662-8545
Purafil, Inc. 2654 Weaver Way, Doraville, GA 30340, 1-800-222-6367 / Internat'l:075 684 2486

Environmental Systems
A Division of Purafil, Inc.
2654 WEAVER WAY
DORAVILLE, GA 30340 U.S.A.
TEL: (770)662-8545
FAX: (770)263-0520

300 CFM DRUM SCRUBBER
WITH BLOWER & RAINHOOD

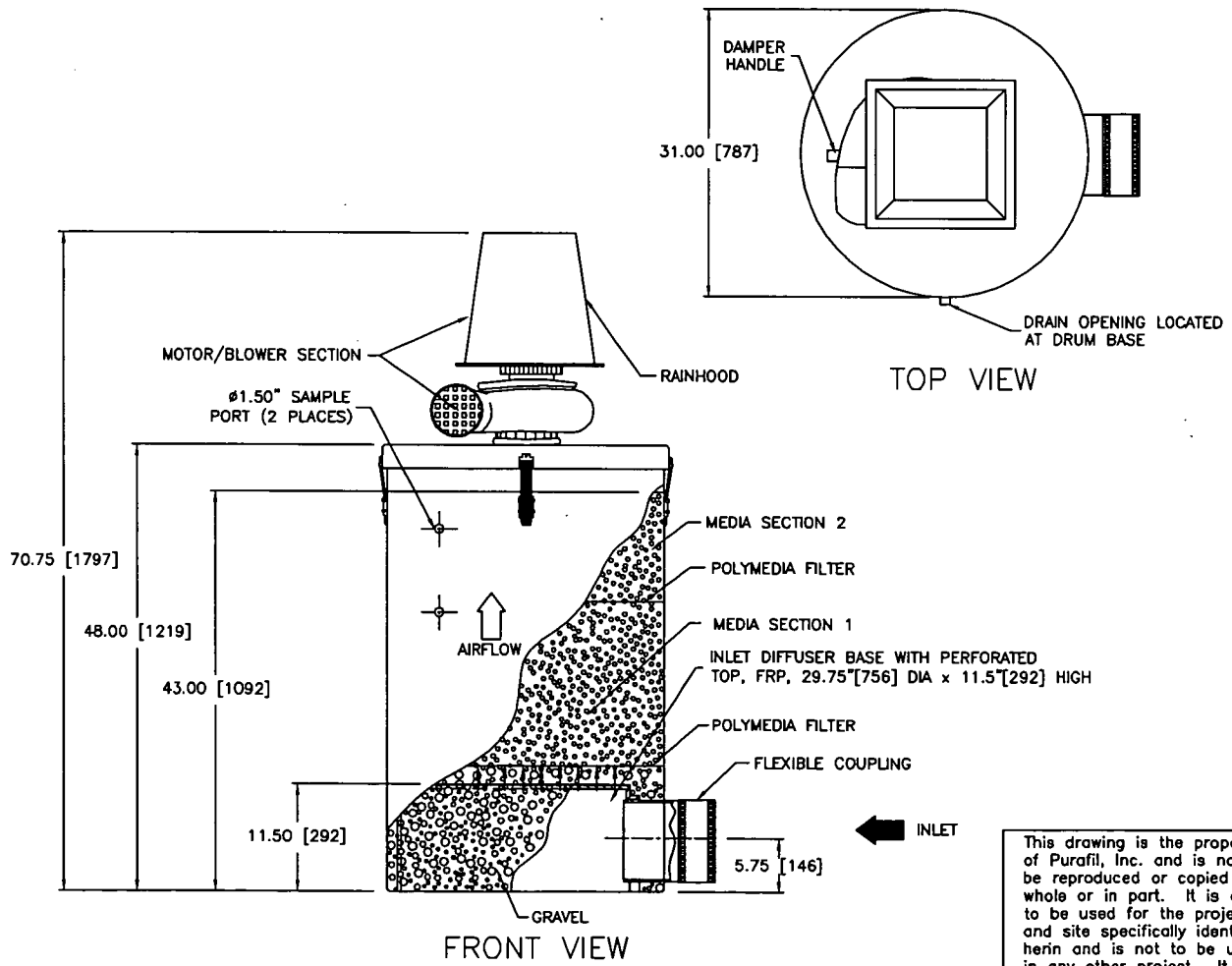

DIMENSIONS ARE IN INCHES. METRIC EQUIVALENTS IN BRACKETS [ ] ARE IN MILLIMETERS.
PURAFIL, INC. RESERVES THE RIGHT TO MODIFY DESIGN FOR IMPROVED PRODUCT PERFORMANCE.
PURAFIL®, PURAFIL II®PURASORB®, CHLOROSORB®, AND THE SCOOTER® SKUNK EMBLEM (REG. U.S.PAT. & TM OFFICE),PURASTAT®, HEBA-LOCK®, CORROSIVE-AIRE®,E.S.®,"PURACARB",PM® SERIES AND THE DISTINCTIVE SHAPE OF PM® MODULES ARE TRADEMARKS OF PURAFIL® INC.,A U.S.A.CORPORATION.

This drawing is the property of Purafil, Inc. and is not to be reproduced or copied in whole or in part. It is only to be used for the project and site specifically identified herin and is not to be used in any other project. It is to be returned upon request.

CROSS REFERENCE TO P.B. 122

JOB/UNIT IDENTIFICATION:

MODEL #: DS-300

MATERIAL: DRUM – HIGH DENSITY POLYETHYLENE

FINISH: DRUM – BLACK

ELECTRICAL

VOLTS	PH	HZ	HP	TYPE
☐ (STD) 115/230	1	60	1.5	TEFC
☐ 220/380	1	50	1.5	TEFC

RECOMMENDED AIRFLOW:

300 CFM @ 2.5 IWG EXTERNAL STATIC

PURAFIL® AIR PURIFICATION MEDIA(S) IN DIRECTION OF AIRFLOW:

	MEDIA TYPE	TOTAL MEDIA
☐		
☐		
☐		

INLET CONNECTION:

☐ (STD) 8.0" [203mm] FLEXIBLE COUPLING
☐ 6.0" [152mm] FLEXIBLE COUPLING

MISCELLANEOUS:

1. SOUND LEVEL 65 dbA @ 5 FT.
2. DRAIN: ø0.75 DRAIN PIPE.

☐ FOR APPROVAL ☐ FOR INFORMATION
☐ FOR CONSTRUCTION ☐ AS BUILT

DATE: 01/13/00

REV DATE: 06/28/00

OPERATING WEIGHT: LB [KG]

APPROVED BY: CDM/BLG

DRAWING NUMBER: 8003E

REVISION: C

Environmental Systems
A Division of Purafil, Inc.
2654 WEAVER WAY
DORAVILLE, GA 30340 U.S.A.
TEL: (770)662-8545
FAX: (770)263-0520

500 CFM DRUM SCRUBBER
WITH BLOWER & RAINHOOD

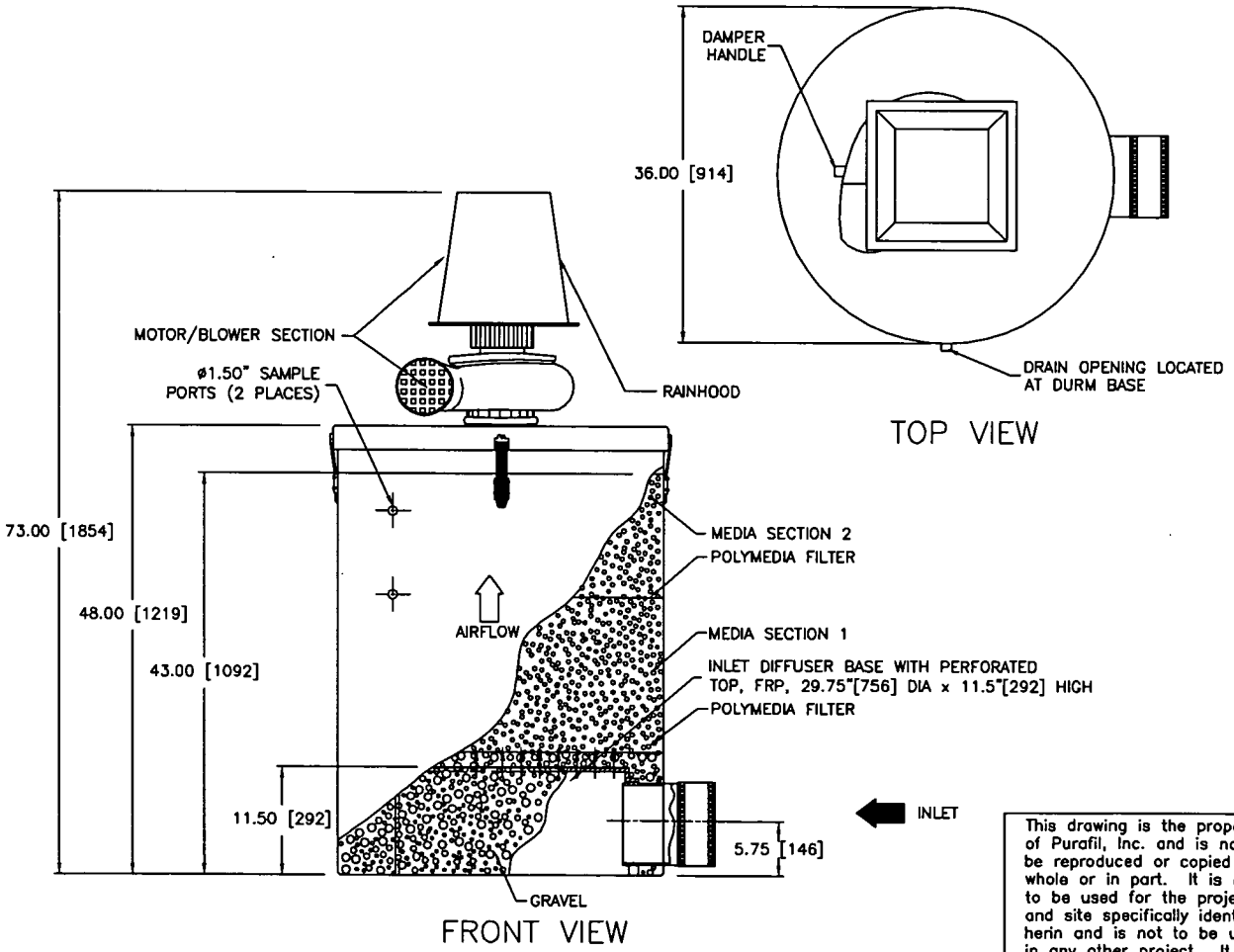

DIMENSIONS ARE IN INCHES. METRIC EQUIVALENTS IN BRACKETS [ ] ARE IN MILLIMETERS.

PURAFIL, INC. RESERVES THE RIGHT TO MODIFY DESIGN FOR IMPROVED PRODUCT PERFORMANCE.
PURAFIL®, PURAFIL II®PURASORB®, CHLOROSORB®, AND THE SCOOTER® SKUNK EMBLEM (REG. U.S.PAT. & TM OFFICE),PURASTAT™, HEPA-LOCK™, CORROSIVE-AIRE™,I.E.S.™,"PURACARB™",PM™ SERIES AND THE DISTINCTIVE SHAPE OF PM™ MODULES ARE TRADEMARKS OF PURAFIL™ INC.,A U.S.A.CORPORATION.

This drawing is the property of Purafil, Inc. and is not to be reproduced or copied in whole or in part. It is only to be used for the project and site specifically identified herin and is not to be used in any other project. It is to be returned upon request.

CROSS REFERENCE TO P.B. 122

JOB/UNIT IDENTIFICATION:

MODEL #: DS-500

MATERIAL: DRUM – HIGH DENSITY POLYETHYLENE

FINISH: DRUM – BLACK

ELECTRICAL

VOLTS	PH	HZ	HP	TYPE
☐ (STD) 115/230	1	60	3.0	TEFC
☐ 220/380	3	50	3.0	TEFC

RECOMMENDED AIRFLOW:

500 CFM @ 4.5 IWG EXTERNAL STATIC

PURAFIL® AIR PURIFICATION MEDIA(S) IN DIRECTION OF AIRFLOW:

MEDIA TYPE	TOTAL MEDIA
☐	
☐	
☐	

INLET CONNECTION:

☐ (STD) 8.0" [203mm] FLEXIBLE COUPLING
☐ 6.0" [152mm] FLEXIBLE COUPLING

MISCELLANEOUS:

1. SOUND LEVEL 65 dbA @ 5 FT.
2. DRAIN: ø0.75 DRAIN PIPE.

☐ FOR APPROVAL ☐ FOR INFORMATION
☐ FOR CONSTRUCTION ☐ AS BUILT

DATE: 02/16/00
REV DATE: 06/26/00
OPERATING WEIGHT: LB [KG]
APPROVED BY: CDM/BLG
DRAWING NUMBER: 8005E
REVISION: C

SUGGESTED SPECIFICATIONS - DS-300

DRUM SCRUBBER - 300 CFM

For use with drawing 8003E

PURAFIL Environmental Systems Division

1. GENERAL

1.01 Intent

A. It is the intent of these Suggested Specifications to give the Contractor/Engineer the descriptions of the equipment, instructions for delivers, and installation of the Purafil ESD Drum Scrubber-300 cfm (DS-300) as manufactured by Purafil, Inc. Doraville, Georgia or equal.

B. The Contractor/Engineer is advised that all drawings shall be for general reference.

C. The Contractor/Engineer shall provide all equipment and work indicated below unless otherwise noted and any additional work to produce a completely finished job as required by the Engineer.

2. PRODUCTS

2.01 General

A. This specification defines the requirements for a Drum Scrubber-300 cfm (DS-300) as manufactured by Purafil, Inc. Doraville, Georgia or equal.

B. The DS-300 consists of dry-scrubbing media contained in a 150-gallon, linear, low density, polyethylene drum with a blower mounted on top of a FRP lid.

C. The DS-300 shall contain 2 ft^3 (0.06 m^3) of Odoroxidant™ (100 lbs/45 kg), 5 ft^3 (0.14 m^3) of Odorcarb™ II (225 lbs/102 kg), and 3 ft^3 (0.08 m^3) of Odormix™ (120 lbs/54 kg) media.

D. The DS-300 shall be designed to operate at 99.5+% gas removal efficiencies.

E. The airflow capacity shall range from 210 cfm (357 m^3/hr) at 1.25 IWG (311 Pa) with the damper 25 percent open, to 314 cfm (534 m^3/hr) at 2.5 IWG (623 Pa) with the damper half open, and to 436 cfm (741 m^3/hr) at 3.9 IWG (971 Pa) with the damper fully opened.

F. The configuration shall be arranged so that the contaminated air shall flow into the bottom inlet plenum and be drawn upwards through the media bed. Treated air shall discharge out the top of the vessel through a centrifugal air ventilator.

G. All components of the DS-300 shall include:

1. 150-gallon, linear, low density, polyethylene drum and FRP lid
2. 445 pounds (197 kg) of dry-scrubbing media
3. Polypropylene blower section with damper

2.02 Drum

A. The drum material shall be linear, low density, polyethylene, 1/4" (6.4 mm) in thickness.

B. The drum shall have a capacity of 150 gallons and measure 31" (78.7 cm) in diameter and 48" (121.9 cm) in height.

C. Latches shall be stainless steel and rubber.

D. Fasteners shall be stainless steel.

E. The drum shall contain 10 ft^3 of Odoroxidant, Odorcarb II, and Odormix media as manufactured by Purafil, Inc.

F. The drum shall be provided with two media sampling ports, each measuring one inch in diameter.

G. The media shall be supported by an HPDE column surrounded by thermoplastic packing for air diffusion purposes.

H. Polymedia filters shall be used to separate the packing from the Odoroxidant media, the blower from the Odormix media, and to separate the layers of media.

I. The inlet shall have an 8" pipe diameter (20.3 cm) FERNCO flexible coupling.

J. The drum shall have a 0.75" (19 mm) dia. drain pipe.

2.03 Blower Section

A. The blower shall be sized to deliver 210 cfm (357 m^3/hr) at 1.25 IWG (311 Pa) with the damper 25 percent open, to 314 cfm (534 m^3/hr) at 2.5 IWG (623 Pa) with the damper half open, and to 436 cfm (741 m^3/hr) at 3.9 IWG (971 Pa) with the damper fully opened.

B. The blower/motor shall be covered with an FRP rainhood.

C. The blower shall consist of a direct drive motor-fan assembly.

D. The motor shall be a 1.5 hp, 3450 RPM, 115/230 volt / 1 phase/ 60 Hz TEFC motor.

E. The motor shall be prewired with a 6 ft (1.8 m) grounded power cord.

2654 Weaver Way • Doraville,GA 30340 • (Toll-Free) 1-800-222-6367 • (Phone) 770-662-8545 • (Fax) 770-263-6922
Email:purafil@purafil.com • www.purafil.com

2.04 Chemical Media

A. The DS-300 shall contain 2 ft^3 (0.06 m^3) of Odoroxidant™ Media, 5 ft^3 (0.14 m^3) of Odorcarb™ II Media, and 3 ft^3 (0.08 m^3) of Odormix™ Media as manufactured by Purafil, Inc.

B. The Odoroxidant Media shall consist of manufactured, generally spherical, porous pellets. Pellets shall be formed from a combination of activated alumina and other binders, suitably impregnated with potassium permanganate to provide optimum adsorption, absorption, and oxidation of a wide variety of gaseous contaminants. The potassium permanganate shall be applied during pellet formation, such that the impregnant is uniformly distributed throughout the pellet volume and is totally available for reaction.

C. Odoroxidant Media shall have the following physical properties:
   1. Moisture content: 35% maximum
   2. Average crush strength: 35% minimum - 70% maximum
   3. Average abrasion: 4.5% maximum
   4. Bulk density: 50 lbs/ft^3 (800 kg/m^3)
   5. Nominal pellet diameter: 1/8" (3.2 mm)
   6. Potassium permanganate content: 8% minimum

D. Odoroxidant Media shall be UL Classified Class 1.

E. Odoroxidant Media shall be capable of absorbing and removing odorous gases throughout the entire pellet.

F. The Odorcarb II Media shall consist of manufactured, generally spherical porous pellets. The pellets shall be formed from a combination of powered activated carbon, alumina, and other binders suitably impregnated with chemicals to enhance the capacity for removal of odorous gases. The pellets shall also chemically react to produce solid reaction products within the media. Impregnants shall be applied during pellet formation such that the impregnant is uniformly distributed throughout the pellet volume.

G. Odorcarb II Media shall have the following physical properties:
   1. Moisture content: 35% maximum
   2. Average crush strength: 35% minimum - 70% maximum
   3. Average abrasion: 4.5 maximum
   4. Bulk density: 45 lbs/ft^3 (721 kg/m^3)
   5. Nominal pellet diameter: 1/16" – 1/8" (1.587mm)

H. Odorcarb II Media shall be UL Classified Class 2.

I. Odorcarb II Media shall be capable of absorbing and removing odorous gases throughout the entire pellet.

J. The Odormix Media shall consist of an equal mix (by volume) of Purafil ESD's Odoroxidant Media and Odorkol Media. Odoroxidant Media shall be manufactured of generally spherical, porous pellets formed from a combination of powdered activated alumina and other binders, suitably impregnated with potassium permanganate to provide optimum adsorption, absorption, and oxidation of a wide variety of gaseous contaminants. The potassium permanganate shall be applied during pellet formation, such as the impregnant is uniformly distributed throughout the pellet volume and is totally available for reaction. Odorkol Media shall be a premium grade, activated carbon with a high surface area available for adsorption.

K. Odormix Media shall have the following physical properties:
   1. <u>Odoroxidant Media</u>
      - Moisture content: 35% maximum
      - Average crush strength: 35% minimum - 70% maximum
      - Average abrasion: 4.5% maximum
      - Bulk density: 50 lbs/ft^3 (800 kg/m^3)
      - Nominal pellet diameter: 1/16" (1.587mm)
      - Potassium permanganate content: 8% minimum

   2. <u>Odorkol Media</u>
      - Moisture content: 5.0% maximum
      - CTC: 55 minimum
      - Base material: activated carbon
      - Bulk density: 30-32 lbs/ft^3 (480-512 kg/m^3)
      - Odormix Media shall be UL Classified Class 1.

3. ANALYTICAL SERVICES

3.01 Media Sampling and Analysis

A. The manufacturer shall, after start up, shall analyze media samples to predict the remaining service life of system media. Such service will be provided as needed at the manufacturer's expense.

SUGGESTED SPECIFICATIONS - DS-300 *(CONTINUED)*

DRUM SCRUBBER - 300 CFM

For use with drawing 8003E

PURAFIL Environmental Systems Division

4. MANUFACTURER

4.01 Purafil, Inc.

A. The manufacturer shall have a minimum of ten years experience in the design, fabrication, and testing of systems that are 99.5+% efficient at removing gaseous contaminants.

B. The manufacturer shall be a single source provider of equipment, media, and testing services and be certified to ISO-9001 standards.

C. The manufacturer shall have local, factory-trained representatives.

D. The manufacturer shall be Purafil, Inc. of Doraville, Georgia.

2654 Weaver Way • Doraville,GA 30340 • (Toll-Free) 1-800-222-6367 • (Phone) 770-662-8545 • (Fax) 770-263-6922
Email:purafil@purafil.com • www.purafil.com

Purafil ESD Drum Scrubber - 300

Manufactured by Purafil Environmental Systems Division (ESD), the Drum Scrubber–300 (DS-300) is ideal for removal of odorous gases found at pump stations, lift stations, wet wells, force mains, and at the wastewater treatment plant itself. Recommended for low to moderate load applications, the DS-300 is sized for airflows up to 300 cfm.

Construction: The DS-300's polyethylene canister measures 31 inches (78.7 cm) in diameter, 72 inches (182.8 cm) in height (including blower), and 1/4-inch (6.4 mm) in thickness.

Media: At the core of ESD's high-efficiency odor control systems are dry-chemical air filtration media. The DS-300 is bulk filled with multiple layers of Odoroxidant™, Odorcarb™ II, and Odormix™ media for removal of sewage odors at 99.5+% effiiencies.

Applications

- Pump Stations
- Lift Stations
- Wet Wells
- Force Mains
- Head Works
- Aerobic Digesters
- Clarifiers
- Sludge Dewatering

Targeted Odors/Gases

- Hydrogen sulfide
- Ammonia
- Aldehydes
- Sulfur dioxide
- Mercaptans
- Organic compounds

System Advantages

Corrosion-Resistant Housing: The DS-300 is constructed of corrosion-resistant materials and requires essentially no maintenance, making it ideal for remote applications or areas where high levels of acid gases are present.

Low Maintenance: The DS-300 has only one moving part—a blower. Other than routine service checks, no maintenance is required to ensure maximum scrubber performance. The expected service life of the DS-300 is nine months to one year, depending on contaminant levels.

Complete Gas Removal: Purafil ESD's Odoroxidant, Odorcarb II, and Odormix media offer broad-spectrum removal of sewage odors. By using these media in combination, users are assured of complete odor control.

Quiet Operation: The DS-300 is designed for quiet operation in residential neighborhoods.

Media Sampling Ports: Two media sampling ports, located on the side of the DS-300, allow for easy access to the media beds. Upon receiving the samples, Purafil ESD's laboratory performs a complimentary Media Life Analysis to project remaining service life. Timely replacement of spent media is critical in preventing odor breakthrough.

Local Service: Purafil ESD's network of local representatives offers convenient and timely service. These factory-trained representatives work in conjunction with Purafil ESD's in-house laboratory to provide comprehensive technical service.

Standard Features:

- Linear, low-density, polyethylene canister (¼-inch in thickness)
- Odoroxidant, Odorcarb II, and Odormix media (10 ft^3)
- Integrated motor housing
- Totally Enclosed Fan Cooled (TEFC) motor
- High-density, rotomolded, polypropylene motor/blower assembly
- Adjustable damper (PVC)
- Stainless steel and rubber latches
- Stainless steel fasteners
- Thermoplastic packing and FRP lid
- Polypropylene impellers and motor shaft bushings
- Integrated rainhood
- Fernco flexible coupling at inlet
- Polyethylene inlet (8-inch pipe diameter)
- Airflows up to 300 cfm

Optional Features

- Other Purafil ESD media

Other System Advantages

- System media are UL Classified Class 1 and 2
- Spent media are landfill disposable
- Maintains superior performance in climates with fluctuating temperature and relative humidity

PURAFIL Environmental Systems Division

Purafil, Inc. • 2654 Weaver Way • Doraville, Georgia 30340 • Phone: (770) 662-8545 • Fax: (770) 263-6922 • www.purafil.com

SUGGESTED SPECIFICATIONS - DS-500

DRUM SCRUBBER - 500 CFM

For use with drawing 8005E

PURAFIL Environmental Systems Division

1. GENERAL

1.01 Intent

A. It is the intent of these Suggested Specifications to give the Contractor/Engineer the descriptions of the equipment, instructions for delivers, and installation of the Purafil Drum Scrubber-500 cfm (DS-500) as manufactured by Purafil, Inc. Doraville, Georgia or equal.

B. The Contractor/Engineer is advised that all drawings shall be for general reference.

C. The Contractor/Engineer shall provide all equipment and work indicated below unless otherwise noted and any additional work to produce a completely finished job as required by the Engineer.

2. PRODUCTS

2.01 General

A. This specification defines the requirements for a Drum Scrubber-500 cfm (DS-500) as manufactured by Purafil, Inc. Doraville, Georgia or equal.

B. The DS-500 consists of dry-scrubbing media contained in a 200-gallon, linear, low density, polyethylene drum with a blower mounted on top of a FRP lid.

C. The DS-500 shall contain 3 ft^3 (0.08 m^3) of Odoroxidant™ (150 lbs/68 kg), 10 ft^3 (0.28 m^3) of Odorcarb™ II (450 lbs/204 kg), and 4 ft^3 (0.11 m^3) of Odormix™ (160 lbs/73 kg) media.

D. The DS-500 shall be designed to operate at 99.5+% gas removal efficiencies.

E. The airflow capacity shall range from 350 cfm (595 m^3/hr) at 3.00 IWG with the damper half open to 500 cfm (850 m^3/hr) at 4.5 IWG with the damper fully opened.

F. The configuration shall be arranged so that the contaminated air shall flow into the bottom inlet plenum and be drawn upwards through the media bed. Treated air shall discharge out the top of the vessel through a centrifugal air ventilator.

G. All components of the DS-500 shall include:

1. 200-gallon, linear, low density, polyethylene drum and FRP lid
2. 730 pounds (331 kg) of dry-scrubbing media
3. Polypropylene blower section with damper

2.02 Drum

A. The drum material shall be linear, low density, polyethylene, 1/4" (6.4mm) in thickness.

B. The drum shall have a capacity of 200 gallons and measure 36" (91.4 cm) in diameter and 48" (121.9 cm) in height.

C. Latches shall be stainless steel and rubber.

D. Fasteners shall be stainless steel.

E. The drum shall contain 17 ft^3 (0.48 m^3) of Odoroxidant, Odorcarb II, and Odormix media as manufactured by Purafil, Inc.

F. The drum shall be provided with two media sampling ports, each measuring one inch in diameter.

G. The media shall be supported by an HPDE column surrounded by thermoplastic packing for air diffusion purposes.

H. Polymedia filters shall be used to separate the packing from the Odoroxidant media, the blower from the Odormix media, and to separate the layers of media.

I. The inlet shall have a 8" (203.2 mm) FERNCO flexible coupling.

J. The drum shall have a 0.75" (19 mm) dia. drain pipe.

2.03 Blower Section

A. The blower shall be sized to deliver 350 cfm (595 m^3/hr) at 3.00 IWG with the damper half open to 500 cfm (850 m^3/hr) at 4.5 IWG with the damper fully opened.

B. The blower/motor shall be covered with an FRP rainhood.

C. The blower shall consist of a direct drive motor-fan assembly.

D. The motor shall be a 1.5 hp, 3450 RPM, 115/230 volt / 1 phase/ 60 Hz TEFC motor.

E. The unit shall come pre-wired with a 6 ft. (1.8 m) grounded power cord.

2654 Weaver Way • Doraville, GA 30340 • (Toll-Free) 1-800-222-6367 • (Phone) 770-662-8545 • (Fax) 770-263-6922
Email:purafil@purafil.com • www.purafil.com

SUGGESTED SPECIFICATIONS - DS-500 *(CONTINUED)*

DRUM SCRUBBER - 500 CFM

For use with drawing 8005E

PURAFIL Environmental Systems Division

2.04 Chemical Media

A. The DS-500 shall contain 3 ft^3 (0.08 m^3) of Odoroxidant™ (150 lbs/68 kg), 10 ft^3 (0.28 m^3) of Odorcarb™ II (450 lbs/204 kg), and 4 ft^3 (0.11 m^3) of Odormix™ (160 lbs/73 kg) media.

B. The Odoroxidant Media shall consist of manufactured, generally spherical, porous pellets. Pellets shall be formed from a combination of activated alumina and other binders, suitably impregnated with potassium permanganate to provide optimum adsorption, absorption, and oxidation of a wide variety of gaseous contaminants. The potassium permanganate shall be applied during pellet formation, such that the impregnant is uniformly distributed throughout the pellet volume and is totally available for reaction.

C. Odoroxidant Media shall have the following physical properties:

1. Moisture content: 35% maximum
2. Average crush strength: 35% minimum - 70% maximum
3. Average abrasion: 4.5% maximum
4. Bulk density: 50 lbs/ft^3 (800 kg/m^3)
5. Nominal pellet diameter: 1/8" (3.2 mm)
6. Potassium permanganate content: 8% minimum

D. Odoroxidant Media shall be UL Classified Class 1.

E. Odoroxidant Media shall be capable of absorbing and removing odorous gases throughout the entire pellet.

F. The Odorcarb II Media shall consist of manufactured, generally spherical porous pellets. The pellets shall be formed from a combination of powered activated carbon, alumina, and other binders suitably impregnated with chemicals to enhance the capacity for removal of odorous gases. The pellets shall also chemically react to produce solid reaction products within the media. Impregnants shall be applied during pellet formation such that the impregnant is uniformly distributed throughout the pellet volume.

G. Odorcarb II Media shall have the following physical properties:

1. Moisture content: 35% maximum
2. Average crush strength: 35% minimum - 70% maximum
3. Average abrasion: 4.5 maximum
4. Bulk density: 45 lbs/ft^3 (721 kg/m^3)
5. Nominal pellet diameter: 1/16" –1/8" (1.587mm)

H. Odorcarb II Media shall be UL Classified Class 2.

I. Odorcarb II Media shall be capable of absorbing and removing odorous gases throughout the entire pellet.

J. The Odormix Media shall consist of an equal mix (by volume) of Purafil ESD's Odoroxidant Media and Odorkol Media. Odoroxidant Media shall be manufactured of generally spherical, porous pellets formed from a combination of powdered activated alumina and other binders, suitably impregnated with potassium permanganate to provide optimum adsorption, absorption, and oxidation of a wide variety of gaseous contaminants. The potassium permanganate shall be applied during pellet formation, such as the impregnant is uniformly distributed throughout the pellet volume and is totally available for reaction. Odorkol Media shall be a premium grade, activated carbon with a high surface area available for adsorption.

K. Odormix Media shall have the following physical properties:

1. <u>Odoroxidant Media</u>
   - Moisture content: 35% maximum
   - Average crush strength: 35% minimum - 70% maximum
   - Average abrasion: 4.5% maximum
   - Bulk density: 50 lbs/ft^3 (800 kg/m^3)
   - Nominal pellet diameter: 1/16" (1.587mm)
   - Potassium permanganate content: 8% minimum
2. <u>Odorkol Media</u>
   - Moisture content: 5.0% maximum
   - CTC: 55 minimum
   - Base material: activated carbon
   - Bulk density: 30-32 lbs/ft^3 (480-512 kg/m^3)
   - Odormix Media shall be UL Classified Class 1.

2654 Weaver Way • Doraville, GA 30340 • (Toll-Free) 1-800-222-6367 • (Phone) 770-662-8545 • (Fax) 770-263-6922
Email:purafil@purafil.com • www.purafil.com

SUGGESTED SPECIFICATIONS - DS-500 *(CONTINUED)*

DRUM SCRUBBER - 500 CFM

For use with drawing 8005E

PURAFIL Environmental Systems Division

3. ANALYTICAL SERVICES

3.01 Media Sampling and Analysis

A. The manufacturer shall, after start up, shall analyze media samples to predict the remaining service life of system media. Such service will be provided as needed at the manufacturer's expense.

4. MANUFACTURER

4.01 Purafil, Inc.

A. The manufacturer shall have a minimum of ten years experience in the design, fabrication, and testing of systems that are 99.5+% efficient at removing gaseous contaminants.

B. The manufacturer shall be a single source provider of equipment, media, and testing services and be certified to ISO-9001 standards.

C. The manufacturer shall have local, factory-trained representatives.

D. The manufacturer shall be Purafil, Inc. of Doraville, Georgia.

2654 Weaver Way • Doraville, GA 30340 • (Toll-Free) 1-800-222-6367 • (Phone) 770-662-8545 • (Fax) 770-263-6922
Email:purafil@purafil.com • www.purafil.com

Purafil ESD Drum Scrubber - 500

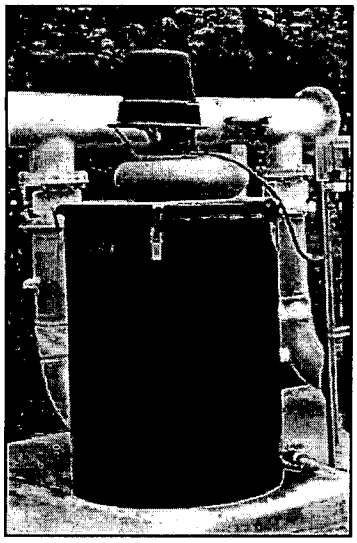

Manufactured by Purafil Environmental Systems Division (ESD), the Drum Scrubber–500 (DS-500) is ideal for removal of odorous gases found at pump stations, lift stations, wet wells, force mains, and even at the wastewater treatment plant. Recommended for moderate-load applications, the DS-500 is sized for airflows up to 500 cfm.

Construction: The DS-500's polyethylene canister measures 36 inches (91.4 cm) in diameter, 72 inches (182.8 cm) in height (including blower), and 1/4-inch (6.4 mm) in thickness.

Media: At the core of ESD's high-efficiency odor control systems are dry-chemical air filtration medias. The DS-500 is bulk filled with multiple layers of Odoroxidant™, Odorcarb™ II, and Odormix™ media for broad-spectrum removal of sewage odors at 99.5+% efficiencies.

Applications

- Pump Stations
- Lift Stations
- Wet Wells
- Force Mains
- Head Works
- Aerobic Digesters
- Clarifiers
- Sludge Dewatering

Targeted Odors/Gases

- Hydrogen sulfide
- Ammonia
- Aldehydes
- Sulfur dioxide
- Mercaptans
- Organic compound

System Advantages

Corrosion-Resistant Housing: The DS-500 is constructed of corrosion-resistant materials and requires essentially no maintenance, making it ideal for remote, outdoor applications or areas where high levels of acid gases are present.

Low Maintenance: The DS-500 has only one moving part—a blower. Other than routine service checks, no maintenance is required to ensure maximum scrubber performance. The expected service life of the DS-500 is nine months to one year, depending on the contaminant level.

Complete Gas Removal: Purafil ESD's Odoroxidant, Odorcarb II, and Odormix media offer broad-spectrum removal of sewage odors. By using these media in combination, users are assured of complete odor control.

Quiet Operation: The DS-500 is designed for quiet operation in residential neighborhoods

Media Sampling Ports: Two media sampling ports, located on the side of the DS-500, allow for easy access to the media beds. Upon receiving the samples, Purafil ESD's laboratory performs a complimentary Media Life Analysis to project remaining service life. Timely replacement of spent media is critical in preventing odor breakthrough.

Local Service: Purafil ESD's network of local representatives offers convenient and timely service. These factory-trained representatives work in conjunction with ESD's in-house laboratory to provide comprehensive technical service.

Standard Features:

- Linear, low-density, polyethylene canister (¼-inch in thickness)
- Odoroxidant, Odorcarb II, and Odormix media (17 ft^3)
- Integrated motor housing
- Totally Enclosed Fan Cooled (TEFC) motor
- High-density, rotomolded, polypropylene motor/blower assembly
- Adjustable damper (PVC)
- Stainless steel and rubber latches
- Stainless steel fasteners
- Thermoplastic packing and FRP lid
- Polypropylene impellers and motor shaft bushings
- Integrated rainhood
- Fernco flexible coupling at inlet
- Polyethylene inlet (8-inch pipe diameter)
- Airflows up to 500 cfm

Optional Features

- Other Purafil ESD media

Other System Advantages

- System media are UL Classified Class 1 and 2.
- Spent media is landfill disposable.
- Maintains superior performance in climates with fluctuating temperature and relative humidity.

PURAFIL Environmental Systems Division

2654 Weaver Way • Doraville, Georgia 30340 • Phone: (770) 662-8545 • Fax: (770) 263-6922 • www.purafil.com

Purafil ESD Mediapik Basic Report

10-12-2004

Reference Job Name: Lytton Road SP298

Gases/Odors	ppm
hydrogen sulfide	90

Airflow: 54 m3/hr **Hours per Day:** 24 **Days per Week:** 7

Estimated Media Usage Summary

	3 Months	6 Months	12 Months	24 Months
Odorcarb II	42 kgs	84 kgs	168 kgs	337 kgs

Local Rep: PURAFIL INC. (770)662-8545
Purafil, Inc. 2654 Weaver Way, Doraville, GA 30340, 1-800-222-6367 / Internat'l 075 684 2486

Purafil ESD's Odorcarb™ II Media

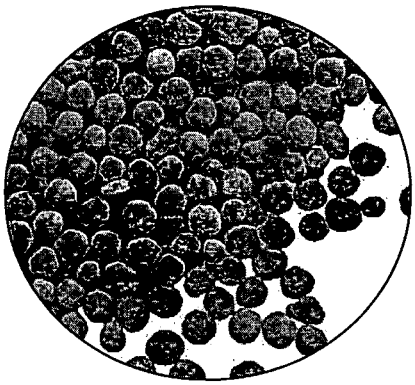

Proven Performance

Odorcarb™ II Media is highly effective at removing odorous hydrogen sulfide gas (H_2S) and is the primary media in Purafil ESD's odor control systems for wastewater treatment applications.

Characteristics

- Landfill disposable
- New and spent media is non-toxic
- UL Classified Class 2

Media

Odorcarb™ II, an activated alumina-based media shall consist of manufactured, generally spherical porous pellets measuring 1/16" to 1/8" in diameter. Pellets shall be formed from a combination of powdered activated carbon, alumina and other binders, suitably impregnated with caustic chemicals to enhance the capacity for removal of hydrogen sulfide.

Impregnants shall be applied during pellet formation, such that the impregnant is uniformly distributed throughout the volume of the pellet.

Disposal Requirements

Spent Odorcarb™ II Media should be disposed of according to local, state and federal guidelines.

The Chemisorptive Process

The chemisorptive process shall remove contaminant gases by means of adsorption, absorption, and chemical reaction. Gases shall be trapped within the pellet where an irreversible chemical reaction changes the gases into harmless solids, eliminating the possibility of desorption.

Removal Capacity

Odorcarb™ II Media shall meet the following removal capacity for hydrogen sulfide: 35.0% minimum by weight.

100 lbs (45.36 kg) of Odorcarb™ II Media shall remove a minimum of 35 lbs (15.88 kg) of hydrogen sulfide.

Physical Properties

Odorcarb™ II Media shall have the following physical properties:

- **Moisture Content:** 35% Max
- **Crush Strength:** 35% - 70% Max
- **Abrasion:** 4.5% Max
- **Bulk Density:** 45 lbs/ft³ (721 kgs/m³)
- **Pellet Diameter:** 1/16" - 1/8" (1.5 mm - 6.5mm)

Applications

Purafil ESD's Odorcarb™ II Media is ideal for use in environments requiring control of hydrogen sulfide gas, such as wastewater treatment plants, pumping stations, wet wells, lift stations and sludge holding tanks.

Application Guidelines

Odorcarb™ II Media shall perform effectively under the following conditions and guidelines:

- **Temperature:** -4°F to 125°F (-20°C to 51°C)
- **Humidity:** 10 - 95% RH
- **Airflow:** Odorcarb™ II Media shall be effective in Purafil ESD systems, including the Drum Scrubber with airflows from 100 to 1,000 CFM (170 to 1699 m³/hr), Tub Scrubber with airflows from 500 to 6,000 CFM (850 to 10,194 m³/hr) and Deep Bed Scrubber with airflows from 600 to 8,000 CFM (1,020 to 13,592 m³/hr). Odorcarb™ II Media shall also be effective in Vessel Scrubbers with airflows from 8,000 to 20,000 cfm (13,592 to 33,980 m³/hr).

Other Media

Purafil ESD's Odorcarb™ II Media can be used with other media manufactured by Purafil, Inc. Specific media are available for selection based upon the composition of the contaminants present, gaseous concentration levels, airflow requirements and environmental concerns. These media include Odoroxidant™, for the removal of sulfur dioxide, hydrogen sulfide, aldehydes and many organic compounds; Odormix™ for broad-spectrum removal of sewerage odors; Odorkol™ for the removal of hydrocarbons; Odorkol™ AM for the removal of ammonia; Chlorosorb® II for the specific gas removal of chlorine; CSO™ for emergency removal of chlorine and sulfur dioxide.

Purafil ESD, Your Single Source For...

- Media Manufacturing
- Equipment Design & Manufacturing
- Complimentary Media Life Analysis
- Monitoring Instruments & Programs

PURAFIL Environmental Systems Division

Purafil, Inc. • 2654 Weaver Way • Doraville, Georgia 30340 • Phone: (770) 662-8545 • Fax: (770) 263-6922 • www.purafil.com

Purafil ESD's Odormix™ Media

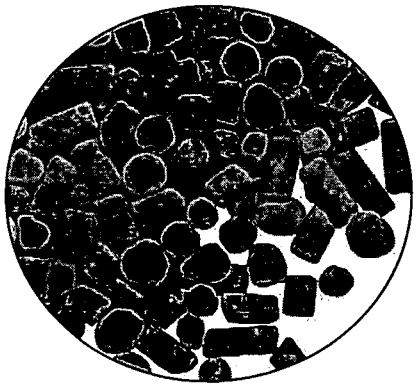

Proven Performance

Purafil ESD's Odormix™ Media offers broad spectrum removal of odorous gases related to sewerage treatment operations.

Characteristics

- Landfill disposable
- UL Classified Class 1
- Medias are pre-mixed at Purafil's factory
- Substitutes for a two-pass media system
- New and spent media is non-toxic

Media

Purafil ESD's Odormix™ Media shall consist of an equal mix (by volume) of Purafil ESD's Odoroxidant™ Media and Odorkol™ Media.

Odoroxidant™ Media shall be manufactured of generally spherical, porous pellets formed from a combination of powdered activated alumina and other binders, suitably impregnated with potassium permanganate to provide optimum adsorption, absorption and oxidation of a wide variety of gaseous contaminants. The potassium permanganate shall be applied during pellet formation, such that the impregnant is uniformly distributed throughout the pellet volume and is totally available for reaction. The Odorkol™ Media shall be a premium grade, activated carbon with a high surface area available for adsorption.

Disposal Requirements

Spent Odormix™ Media should be disposed of according to local, state and federal guidelines.

Physical Properties

Odormix™ Media bulk density is 40 lbs/ft³ (640 kg/m³).

Odoroxidant™ Media shall have the following physical properties:

- **Moisture Content:** 35% Maximum
- **Crush Strength:** 35% - 70%
- **Abrasion:** 4.5% Maximum
- **Bulk Density:** 50 lbs/ft³ (800 kg/m³)
- **Nominal Pellet Diameter:** 1/16" - 1/8" (1.5 mm - 3.2 mm)
- **Potassium Permanganate Content:** 8% Min.
- **Percentage of Pellet Remaining:** 80-85% after screening

Odorkol™ Media shall have the following physical properties:

- **Moisture Content:** >3%
- **CTC:** 55 Minimum
- **Base Material:** Activated Carbon
- **Bulk Density:** 30 lbs/ft³ (480 kg/m³)
- **Pellet Diameter:** 1/16" - 1/8" (1.5 mm - 3.2 mm)

Applications

Purafil ESD's Odormix™ Media is designed for broad spectrum removal of odorous gases, including mercaptans, hydrocarbons, hydrogen sulfide and sulfur dioxide. Odormix™ Media is recommended when space within Purafil ESD's multi-stage scrubber is limited; in this application, Odormix™ substitutes for two media passes. Odormix™ is also recommended as a polishing media.

Application Guidelines

Odormix™ Media shall perform effectively under the following conditions and guidelines:

- **Temperature:** -4°F to 125°F (-20°C to 51°C)
- **Humidity:** 10 - 95% RH
- **Airflow:** Odormix™ Media shall be effective in Purafil ESD systems, including the Drum Scrubber with airflows from 100 to 1,000 CFM (170 to 1699 m³/hr), Tub Scrubber with airflows from 500 to 6,000 CFM (850 to 10,194 m³/hr) and Deep Bed Scrubber with airflows from 600 to 8,000 CFM (1,020 to 13,592 m³/hr). Odormix™ Media Media shall also be effective in Vessel Scrubbers with airflows from 8,000 to 20,000 cfm (13,592 to 33,980 m³/hr).

Other Media

Purafil ESD's Odormix™ Media can be used with other media manufactured by Purafil, Inc. Specific media are available for selection based upon the composition of the contaminants present, gaseous concentration levels, airflow requirements and environmental concerns. These media include Odoroxidant™ for the removal of sulfur dioxide, hydrogen sulfide, aldehydes and many organic compounds; Odorcarb™ II for the removal of hydrogen sulfide, sulfur dioxide and chlorine; Odorkol™ for the removal of hydrocarbons; Odorkol™ AM for the removal of ammonia; and Chlorosorb® II for the specific gas removal of chlorine.

Purafil ESD, Your Single Source For...

- Media Manufacturing
- Equipment Design & Manufacturing
- Complimentary Media Life Analysis
- Monitoring Instruments & Programs

PURAFIL Environmental Systems Division

Purafil, Inc. • 2654 Weaver Way • Doraville, Georgia 30340 • Phone: (770) 662-8545 • Fax: (770) 263-6922 • www.purafil.com

Purafil ESD's Odoroxidant™ Media

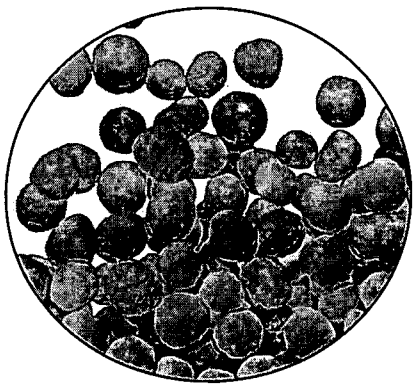

Proven Performance

Odoroxidant™ Media demonstrates a high removal capacity for sewerage gases, including hydrogen sulfide, aldehydes, sulfur dioxide and many organic compounds.

Characteristics

- Landfill disposable
- UL Classified Class 1
- New and spent media is non-toxic
- Will not support bacterial or fungal growth

Media

Purafil ESD's Odoroxidant™ Media shall consist of manufactured, generally spherical, porous pellets. Pellets shall be formed from a combination of activated alumina and other binders, suitably impregnated with potassium permanganate to provide optimum adsorption, absorption and oxidation of a wide variety of gaseous contaminants. The potassium permanganate shall be applied during pellet formation, such that the impregnant is uniformly distributed throughout the pellet volume and is totally available for reaction.

Disposal Requirements

Spent Odoroxidant™ Media should be disposed of according to local, state and federal guidelines.

The Chemisorptive Process

The chemisorptive process shall remove contaminant gases by means of adsorption, absorption, and chemical reaction. Gases shall be trapped within the pellet where an irreversible chemical reaction changes the gases into harmless solids, eliminating the possibility of desorption.

Removal Capacity

Purafil ESD's Odoroxidant™ Media shall meet the following removal capacities:

- **Hydrogen Sulfide:** 18.0% min. by weight
- **Sulfur Dioxide:** 7.0% min. by weight

For example, 100 pounds (45.36 kg) of Purafil ESD's Odoroxidant™ Media will remove a minimum of 18 pounds (8.16 kg) of hydrogen sulfide.

Physical Properties

Purafil ESD's Odoroxidant™ Media shall have the following physical properties:

- **Moisture Content:** 35% Maximum
- **Crush Strength:** 35% - 70%
- **Abrasion:** 4.5% Maximum
- **Bulk Density:** 50 lbs/ft^3 (800 kg/m^3)
- **Pellet Diameter:** 1/16" - 1/8" (1.5 mm - 3.2 mm)
- **Potassium Permanganate Content:** 8% Minimum

Applications

Odoroxidant™ Media is designed for the removal of odorous gases pervasive in wastewater operations. The media is used in conjunction with other Purafil ESD media and serves to polish remaining odorous gases before discharge to the atmosphere.

Application Guidelines

Odoroxidant™ Media shall perform effectively under the following conditions and guidelines:

- **Temperature:** -4°F to 125°F (-20°C to 51°C)
- **Humidity:** 10 - 95% RH
- **Airflow:** Odoroxidant™ Media shall be effective in Purafil ESD systems, including the Drum Scrubber with airflows from 100 to 1,000 CFM (170 to 1699 m^3/hr), Tub Scrubber with airflows from 500 to 6,000 CFM (850 to 10,194 m^3/hr) and Deep Bed Scrubber with airflows from 600 to 8,000 CFM (1,020 to 13,592 m^3/hr). Odoroxidant™ Media shall also be effective in Vessel Scrubbers with airflows from 8,000 to 20,000 cfm (13,592 to 33,980 m^3/hr).

Other Media

Purafil manufactures specific media for selection based upon the composition of the contaminant gases present, concentration levels, airflow requirements, environmental concerns, and room design considerations. These media include Odormix™ for broad-spectrum removal of sewerage odors; Odorcarb™ II for removal of hydrogen sulfide, sulfur dioxide and chlorine; Odorkol™ for removal of hydrocarbons; Odorkol™ AM for removal of ammonia; CSO™ for emergency removal of sulfur dioxide and chlorine gas; Chlorosorb® II for removal of chlorine gas.

Purafil ESD, Your Single Source For...

- Media Manufacturing
- Equipment Design & Manufacturing
- Complimentary Media Life Analysis
- Monitoring Instruments & Programs

PURAFIL Environmental Systems Division

Purafil, Inc. • 2654 Weaver Way • Doraville, Georgia 30340 • Phone: (770) 662-8545 • Fax: (770) 263-6922 • www.purafil.com

Purafil ESD Mediapik Basic Report

10-12-2004

Reference Job Name: Serpentine Road SP300

Gases/Odors	ppm
hydrogen sulfide	93

Airflow: 108 m3/hr **Hours per Day:** 24 **Days per Week:** 7

Estimated Media Usage Summary

	3 Months	6 Months	12 Months	24 Months
Odorcarb II	87 kgs	174 kgs	348 kgs	697 kgs

Local Rep: PURAFIL, INC., (770)662-8545
Purafil, Inc. 2654 Weaver Way, Doraville, GA 30340, 1-800-222-6367 / Internat'l 075 684 2486

Paul,

Please find attached information and pricing for supply of Purafil odour control systems.

1. Lytton Road SP 298

- Basis of design is calculated @ 1 air change per hour = 53m3/hr. The DS-300 has a capacity of 1,080 m3/hr, but given the high average contaminant levels it is recommended that the DS-300's media capacity would need to be utilised (see attached relevant mediapik) . Also the DS-300 will enable us to increase the air change rate if required. The 1 air change per hour is designed around the principle of only ensuring a slight negative pressure within the wet well itself. Inflow into wet well should not come into calculations as the level of effluent within the wet well should remain constant.

- Supply of 1 only Purafil ESD DS-300 Drum Scrubber complete with blower & media = $14,400.00 + GST & Delivery. Please note a VSD drive has not been allowed in the above pricing.

- Delivery is approx. 2 week in December 2004 or 8 to 12 weeks upon placement of order.

- Slab footprint size: Please see attached mechanical drawing on the DS-300 unit.

- Media replacement details: 2 boxes (45 kg) Odoroxidant media, 5 boxes (102 kg) & 3 boxes (55 kg) Odormix media. Replacement media cost $2,400.00 + GST & Delivery

- Fan size and duty, 1.5 Hp.

- Estimated life of media would be around 8 to 12 months

- No requirement for a vent stack is needed with the DS units.

- Units are designed to operate at 99.5%+ gas removal efficiencies

2. Viola Place SP299

- Basis of design is calculated @ 1 air change per hour = 58m3/hr
As per above for balance of design & supply.

3. Serpentine Road SP300

- Basis of design is calculated @ 1 air change per hour = 108m3/hr

- Supply of 1 only Purafil ESD DS-500 Drum Scrubber complete with blower & media = $18,500.00 + GST & Delivery

- Media replacement details: 3 boxes (45 kg) Odoroxidant media, 10 boxes (102 kg) & 4 boxes (55 kg) Odormix media. Replacement media cost $4,190.00 + GST & Delivery

- Fan size and duty, 3 Hp.

- Estimated life of media would be around 8 to 12 months

Balance of design as per above.

If you need any further information please do not hesitate to contact me.

Best regards,

James McIntosh
Airepure Australia
Ph. (03) 9562 0011 0419 138 676
Fax. (03) 9562 1177
Email. j.mcintosh@airepure.com.au