JOHNVALVES
The Valve People

Operation and Maintenance Manual.

Client :

Brisbane Water

Contract No :

R. 111/96/97
Supply of Sluice Valves
DN450 to DN1200.

Supplier :

John Valves Pty Ltd ACN 006 061 674
Creswick Road, Ballarat, Victoria, Australia 3350
Telephone : 03 53330777 Fax : 03 53381771

Ref. MM452202
Rev. 0
April, 1998

JOHN VALVES
The Valve People

Operation and Maintenance Manual.

Client :

Brisbane Water

Contract No :

R. 111/96/97
Supply of Sluice Valves
DN450 to DN1200.

Supplier :

John Valves Pty Ltd ACN 006 061 674
Creswick Road, Ballarat, Victoria, Australia 3350
Telephone : 03 53330777 Fax : 03 53381771

Ref. MM452202
Rev. 0
April, 1998

CONTENTS

SECTION 1: Safety Precautions.

SECTION 2: Technical Data.

SECTION 3: Functional Description.

SECTION 4: Installation.

SECTION 5: Preventative Maintenance.

SECTION 6: Corrective Maintenance.

SECTION 7: Gearbox Details.

SECTION 8: Drawings

SECTION 9: Trouble Shooting.

SECTION 10: Spare Parts.

Ref. MM452202
Rev 0
April 1998

Section 1

Safety Precautions

1.1 General

Do not attempt to store, install, operate the valve or operator without reading the instructions included in this manual.

1.2 Valve (Mechanical)

The valve assembly has been supplied in wooden crates or strapped and fastened to wooden pallets.

Ensure that the equipment is properly supported and carefully lifted using properly located slings so as to prevent damage to the equipment.

Once the equipment is uncrated ensure that the valve is lifted so that the total mass is supported by both lifting eyes.

Ensure that all the equipment is stored in such a manner to properly support the complete valve and actuator assembly from distortion or daamage.

Ensure that the equipment is protected from the weather conditions and ingress of foreign matter during storage.

1.3 Valve Operator

Ensure that the Gearbox maintenance instructions in Section 7 forming part of this manual are carefully read and fully understood before operating the valve.

Section 2

Technical Data.

Nominal Size (mm)	450	600	750	900	900	1200
John Valves Assembly Drawing No	AL421	AL420	AL419	AL418	AL417	AL416
John Valves Item No	69#A0450 -S023	69#A0600 -S020	69#A0750 -S011	69#A0900 -S010	69#A0900- S009	69#A1200- S001
Quantity	1	1	1	2	1	1
John Figure No	694	694	694	694	694	694
Type	Sluice	Sluice	Sluice	Sluice	Sluice	Sluice
Flange Drilling	AS4087 B2	AS4087 B2	AS4087 B2	AS4087 B2	AS4087 B2	AS4087 B2
Maximum Differential Pressure (Kpa)	1400	1400	1200	1200	1200	1200
Test Presures : Body (Kpa) Seat	2800 1400	2800 1400	2400 1200	2400 1200	2400 1200	2400 1200
Operator Type	Spur	Bevel	Bevel	Bevel	Electric	Electric
Operator Brand	Hercus	Hercus	Hercus	Hercus	Limitorque	Limitorque
Operator Model	SVT10	BVT35	BVT35	BVT55	L12040252 BVT55RA7	L12085606 BVT95RA15
Operator Ratio	3:1	4:1	4:1	4:1	16:1	16:1
Valve Mass (Kg)	982	1890	3540	5500	5700	9600
Coating System	Jotacote 412 Internal and External.					

Section 3

FUNCTION DESCRIPTION

The 'John' Figure No 694 design flanged gate valve is a non rising stem inside screw wedge type gate valve. This design is primarily for isolating duties, The valve is constructed from spheroidal graphite cast iron body, bonnet and wedge with gunmetal wedge nut, "screwed in" type body seat and wedge rings with type 431 stainless steel stem and galvanised carbon steel component bolting, guide liners are fitted to the body and wedge, this allows for horizontal operation of the valve in situ.

The valves are coupled to a Hercus gearbox which includes a glacier thrust bearing arrangement, where applicable the Electric Actuators are close coupled to the gearbox.

The gearbox is grease filled lubricated and sealed for life to provide maintenance-free reliability.

Section 4

INSTALLATION

Leave flange protectors and other protective material in place until the valve is ready for installation.

Ensure conduit entries on operators are kept sealed until connection.

During installation support should be provided for the free ends of the pipes, as unsupported pipes hung from valves can originate high stresses in the valve body causing leaks or possible damage.

Ensure all flanges and the inlet and outlet ports of the valve and mating pipes are clean prior to installation.

Fit gaskets to adjacent pipework, using suitable lifting gear and both eyebolts (on valves with eyebolts) provided, install valve in position on the flanges and fit flange bolts and run up nuts. Tighten nuts working on a diagonally opposite sequence.

Section 5

PREVENTATIVE MAINTENANCE

5.1 Routine

5.1.1 Gland Tightening

Tightening gland nuts evenly after short period of service. THIS IS MOST IMPORTANT. Most damage to valve packing's occurs during early life of the packing due to inattention during the first few days of service. Follow this procedure at monthly intervals and after each repacking of stuffing box. DO NOT OVERTIGHTEN

5.1.2 Stuffing Box Packing

To prevent leakage, packing should be added when it is necessary to screw gland nuts more than half way. Should leakage persist after topping up stuffing box, all existing packing must be replaced.

5.2 Periodic

5.2.1 General

Visually check for any leakage.

5.2.2 Body / Bonnet Joint.

At yearly intervals the body / bonnet joint and bonnet / yoke joint should be checked for tightness. Joint faces will be ruined if leakage is permitted. Bonnet nuts and yoke nuts should be tightened evenly, the bonnet nuts in cross - over sequence, not in consecutive order. Any leakage persisting should immediately be fitted with new 'O' rings and gaskets.

5.3 Lubrication

Moving internal parts are lubricated by the service fluid and further lubrication is unnecessary.

Refer to the operator maintenance instructions for lubrication details if required.

Section 6

CORRECTIVE MAINTENANCE

Note 1: **Ensure the valve is in the closed position or gagged as noted in 6.1 below..**
Should leakage be detected, the valve must be dismantled for inspection and this may be carried out with the body remaining in the line. To re-face body seats the valves must be removed from the line.

Method

The following instructions shall be read in conjunction with the relevant Assembly drawing.

6.1 Dismantle

1. Depressurise line or isolate valve and drain, isolate any power supply for safety.
2. The stem should be gagged by clamping two flat bars onto the milled flats positioned on the stem above the gland, provide suitable packing under the bars to hold the stem in position.
3. Loosen grubscrews in the thrust nut locking nut and remove locking nut and thrust nut.
4. Remove the gear operator from the gearbox stand.
5. Remove stand, Note : The 900 & 1200mm valves have an integral stuffing box and gearbox stand.
6. Unscrew gland stud nuts and remove gland.
7. Unscrew stuffing box nuts and remove stuffing box.
8. Remove bonnet bolts, nuts and bonnet.
9. Carefully raise the wedge / stem assembly vertically clear of the valve body.
   Note : The wedge can move sideways allowing the wedge to disengage from the stem/wedge nut assembly.
10. Support the wedge and remove the stem/wedge nut assembly.
11. Unscrew wedge nut from stem.
12. Thoroughly clean all parts and inspect for wear or damage.

6.2 Repairing Parts

Damaged parts should be replaced with new ones available from your supplier or from our Spares department. Any series number shown on the valve or part should be quoted when ordering. Certain parts can be reconditioned if plant is available locally, or return to our Reconditioning department for attention. Facilities are available at our Works for reconditioning complete valves or parts.

6.3 Re-facing Body Seat Rings

The body seat rings of bronze are retained in the body by screwed connection into the body. They must be reconditioned in the valve.

Method

If the body seat ring faces can be reconditioned by lapping, a flat lapping plate of suitable size should be used with oil mixed lapping compound, Grade 400. Remove valve from pipeline if faces are damaged sufficiently to need re-machining. If it is necessary to machine more than 0.4mm metal from each seat ring it is preferable that the valve be returned to the manufacturer for fitting new rings and wedge. If circumstances are such that it is not practical to return the valve, it is possible to machine the body seat rings and fit an oversize wedge.

Fitting New Body Seat Rings

This cannot be done satisfactorily on site. Refer to preceding paragraph.

6.4 Re-facing Wedges

Wedge of cast iron, with bronze facing rings , can be reconditioned by machining or grinding an equal amount off each face and finally lapping. Included angle is 10°. If more than 0.4mm material has to be removed from each face a replacement plain wedge or wedge with facing rings is necessary. Bronze wedge facing rings are securely held in place by a dovetail press-in method or screwed onto the wedge on larger sizes and cannot be replaced. If lapping is necessary wedge faces should be lapped on a flat cast iron lapping plate with oil mixed lapping compound, Grade 400, using a planetary motion covering the whole area of the plate.

Fitting New Wedges

Standard replacement wedges with integral faces or facing rings are available and should be fitted by following the re-assembly procedure. Oversize wedges can be obtained to special order.

6.5 Stem And Wedge Nut

Check for wear, scoring and straightness of the stem and any excessive wear on the shoulders of the wedge nut, if these are apparent, then these parts must be repaired or replaced.

6.6 Re-Assembly

To re-assemble the valve follow the reverse procedure to dismantling using new gaskets and packing applying grease lubricant to the stem threads and lightly smear stem plain portion.

The bonnet bolts must be tightened up evenly on a cross-over sequence and the gland stud nuts tightened sufficiently to compress the packing. Ensure liberal amounts of anti-seize is applied to threads.

If the body was removed from the line, new 'O' rings and gaskets must be used when the valve is re-installed.

6.7 Re-Fitting Gear Operator

Ensure the wedge is in the fully closed position and the shoulder on the stem is hard up against the operator nut.
Check that the operator mounting flange sits freely onto the matching piece, if this does not occur, then rotate the stem into the valve until the flange sits freely.

6.8 Repair And Overhauling Manual Operator

Refer to relevant Operating and Maintenance Instructions covering the manual operator.
Gear Operators are grease packed and sealed for life and would only require repacking if the gear operator is dismantled.

6.9 Re Testing

Re-introduce line pressure, inspect all joints and seals are free from leaks, re-check all bolts for tightness and check valve operation.

Section 7

GEARBOX / ELECTRIC ACTUATOR DETAILS

Title	Ref No
UEC-3 Universal Electronic Controller	Bulletin 440-12000 Rev C Issue5/97
L120 Series Type Instruction & Maintenance Manual	Bulletin 120-11000 Issue 2/97
Maintenance Instructions Hercus SVT Series Valve Operators.	SVT10 Glacier Thrust-Drg 68MA207
Maintenance Instructions Hercus BV Series Valve Operators.	BVT35 Glacier Thrust-Drg 68MA320
Maintenance Instructions Hercus BV Series Valve Operators.	BVT55 Glacier Thrust-Drg 66MA413
Maintenance Instructions Hercus BV Series Valve Operators.	BVT55-GA8D-F14 Glacier Thrust-Drg 66M4A15
Maintenance Instructions Hercus BV Series Valve Operators.	BVT95-GA8D-F16 Glacier Thrust-Drg 66M5A16

UEC-3 Universal Electronic Controller

For ROM version 1.41 or higher

Operation Manual

Limitorque®

WARNING
Read this Instruction Manual carefully and completely before attempting to set-up, operate or troubleshoot your Limitorque UEC-3 Controller. Be aware of electrical hazards within the actuator and high pressure hazards of the attached valve or other actuated device when installing or calibrating your UEC-3 Controller.

UEC-3 Universal Controller
Operation Manual
© 1996 Copyright Limitorque Corporation, All rights reserved.
Printed in the United States of America.

DISCLAIMER
All rights reserved. No part of this manual shall be reproduced, stored in a retrieval system, or transmitted by any means, electronic, mechanical, photocopying, recording, or otherwise without the written permission from Limitorque. While every precaution has been taken in the preparation of the book, the publisher assumes no responsibility for errors or omissions. Neither is any liability assumed for damages resulting from the use of the information contained herein.

This document is proprietary information of Limitorque Corporation furnished for customer use ONLY. No other uses are authorized without written permission of Limitorque Corporation.

Limitorque Corporation reserves the right to make changes, without notice, to this document and the products it describes. Limitorque Corporation shall not be liable for technical or editorial errors or omissions made herein; nor for incidental or consequential damages resulting from the furnishing, performance or use of this document.

This manual contains information that is correct to the best of Limitorque's knowledge. It is intended to be a guide and should not be considered as a sole source of technical instruction, replacing good technical judgment, since all possible situations cannot be anticipated. If there is any doubt as to exact installation, configuration, and/or use, call Limitorque Corporation, at (804) 528-4400.

The choice of system components is the responsibility of the buyer, and the use to which they are put cannot be the liability of Limitorque Corporation. However, Limitorque's sales team and application engineers are always available to assist you in making your decision.

MS-DOS® and Windows are a registered trademark of Microsoft Corporation
IBM-PC is a registered trademark of International Business Machines Corporation

Q-Pulse Id TMS783 Active 29/01/2014 Page 14 of 134

Contents

1. Introduction 1

1.1 Limitorque Valve Control 1
1.2 Product Description 1
1.3 UEC-3 Models 1
1.3.1 UEC-3 1
1.3.2 UEC-3-MPC 1
1.3.3 UEC-3-DDC 2

2. UEC-3 Operational Features 3

2.1 Jammed Valve Protection 3
2.2 Anti-Torque Switch Hammer Protection 3
2.3 Instantaneous Reversal 3
2.4 Opto-Isolated Inputs 4
2.5 Motor Thermal Protection 4
2.6 Emergency Shut-Down (ESD) 4
2.7 Monitor Relay 5
2.8 Torque or Position Seating 5
2.9 Electrical Interlock / Inhibit Circuits 5
2.10 Remote Control Supply 6
2.11 Remote 2, 3 and 4 Wire Control 6
2.11.1 2-Wire Control 6
2.11.2 3-Wire Control 6
2.11.3 4-Wire Control 6
2.12 Clockwise / Counter Clockwise to "Close" Rotation 7
2.13 Power Supply 7
2.13.1 Auto Phase Correction 7
2.13.2 Phase Protection 7
2.13.3 Supply Voltage Setting 7
2.14 Two-Speed Opening and Closing 8
2.15 Local Position / Running Indication 8

3. UEC-3-MPC Modulating Position Controller 9

4. Options 11

4.1 4 - 20 mA Position Transmitter (PT20SD) 11
4.2 Potentiometer 11
4.3 Diagnostic Tools 11

5. UEC-3 Control Module 13

5.1 Single Board Computer (SBC) 13
5.2 Power Supply Board 13
5.3 Termination/Interconnect Board 13

6. UEC-3 Setup - Wiring and Switch Setting 19

6.1 General Set-Up Information 19
6.2 Default DIP Switch Settings 20
6.3 Wiring and DIP Switch Settings 20
6.4 Phase Protection Jumpers 27
6.5 Pushbutton Station Jumpers 27

7. UEC-3-MPC Setup 29

7.1 Default Levels 29
7.2 Procedure 1: Calibrate Feedback Potentiometer 31
7.3 Procedure 2: Calibrate UEC-3-MPC Control Parameters 31
7.4 Procedure 3: Setting DIP Switches to Restore UEC-3 Functionality 39

8. Extended Configuration by Personal Computer 41

8.1 Set the OPEN Speed and Set the CLOSE Speed 41
8.1.1 Opening and Closing Speed 41
8.1.2 Changing the Opening Slow Speed 42
8.1.3 Changing the Closing Slow Speed 43
8.2 Configure ESD Override 43
8.2.1 ESD Override 43
8.2.2 Changing the ESD Override Configuration 43
8.3 Configure the User Digital Inputs 44
8.3.1 Digital Input Mask 44
8.3.2 Changing the Sense of the User Digital Inputs 44
8.4 Set the Jam Timer Reload Time 45
8.4.1 Jam Timer Reload 45
8.4.2 Setting the Jam Timer Reload Time 45
8.5 Set the Minimum/Maximum Modulation Position (UEC-3-MPC only) 46
8.5.1 Minimum/Maximum Modulation Position 46
8.5.2 Changing the Minimum/Maximum Modulation Position 46
8.6 Configure the Monitor Relay Actuation Conditions 47
8.6.1 Monitor Relay Actuation 47
8.6.2 Configuring the Monitor Relay Bit Masks 47

9. Actuator Wiring Details 51

9.1 L120 Actuator Wiring 51
9.2 LY Actuator Wiring 52

10. Troubleshooting 53

10.1 Troubleshooting with the Universal Diagnostic Tool (UDT) 53
10.2 Using the Universal Diagnostic Tool (UDT) 54
10.3 UEC Troubleshooting - All Models 56
10.4 UEC-3-MPC Troubleshooting 57
10.5 Two, Three, and Four-Wire Control Troubleshooting 58

11. Parts 59

12. Customer Service 61

13. Related Publications 63

Figures

Figure 5-1 UEC-3 and UEC-3-MPC Control Module 14
Figure 5-2 Single Board Computer 15
Figure 5-3 Power Supply Board 16
Figure 5-4 Termination/Interconnect Board 17
Figure 6-1 Model, Option, and Configuration Identification Label 19
Figure 6-2 Default DIP Switch Settings for the UEC-3 and UEC-3-MPC 20
Figure 6-3 Functional Key to UEC-3 DIP Switch Settings 21
Figure 6-4 UEC-3 Two, Three, and Four-Wire Control 22
Figure 6-5 UEC-3 and UEC-3-MPC Emergency Shutdown 23
Figure 6-6 UEC-3 and UEC-3-MPC Electrical Interlock/Inhibit 24
Figure 6-7 UEC and UEC-3-MPC Monitor Relay and Optional Potentiometer 25
Figure 6-8 UEC-3 and UEC-3-MPC PT20SD (4-20mA) Position Transducer Wiring 26
Figure 7-1 UEC-3-MPC Control and Actuator Position Input Wiring 30
Figure 7-2 UEC-3-MPC Calibration Procedure 36
Figure 7-3 Functional Key to UEC-3-MPC DIP Switch Settings 40
Figure 9-1 UEC-3 Limit Switch Connections for L120 Series Actuators 51
Figure 9-2 UEC-3 Limit Switch Connections for LY Series Actuators 52
Figure 10-1 Universal Diagnostic Tool 53
Figure 10-2 UEC Troubleshooting Flow Chart - All Models 56
Figure 10-3 UEC-3-MPC Troubleshooting Flow Chart 57
Figure 10-4 Two, Three, and Four-Wire Control Troubleshooting Flow Chart 58

Tables

Table 7-1 Table of Values for Proportional Band and Deadband 35
Table 10-1 UDT LED Caption Designations 55

This page is intentionally blank.

1. Introduction

Note
This manual should be read with the 'L120 or LY Series Instruction and Maintenance Manual' available for easy reference.

1.1 Limitorque Valve Control

Limitorque's L120 and LY series of actuators are the most advanced valve controls on the market... the result of many years of development and awareness of our customers' requirements. This manual has been prepared to help you obtain the most benefit from the equipment. It contains instructions on the correct installation of the units and on the proper use of the operating controls.

Limitorque actuators control the opening and closing of the valve and limit the torque and thrust applied to the valve stem. As a result, all valve operating components are protected from overload, improper seating or pipeline obstructions. Limitorque actuators may be mounted on any size of valve in almost any position or location. They are readily adaptable to existing equipment.

1.2 Product Description

The UEC-3 is a microprocessor based controller for the complete range of Limitorque actuators. It provides many protection and control features which are designed to optimize valve control for your facility. The UEC-3 allows each actuator to be individually configured to fit specific customer needs. This configuration may be altered in the field as process requirements change or as the real needs of the actuator are realized.

1.3 UEC-3 Models:

1.3.1 UEC-3 (Universal Electronic Controller)

The basic UEC-3 model provides control, indication, alarm, and protection features as listed in **Section 2** of this manual. It is intended for use with open/close or pushbutton throttling valves.

1.3.2 UEC-3-MPC (Modulating Position Controller)

This model is designed to position valves in accordance with a 4-20mA command signal, thereby controlling level, flow, pressure, etc. All the indication, alarm, and protection features of the UEC-3 are retained in this model.

1.3.3 UEC-3-DDC (Distributed Digital Controller)

Digital control via Limitorque's DDC-100 Network is provided by this model. The communication protocol may be either Modbus or BITBUS, and up to 250 Limitorque actuators may be controlled and monitored in a DDC-100 Network. The extensive features included and available with the UEC-3-DDC (DDC-100 UEC Field Unit) are covered in two separate publications - Bulletin 440-20014 for the Modbus version and Bulletin 440-20013 for the BITBUS version.

2. UEC-3 Operational Features

2.1 Jammed Valve Protection

The jammed valve state occurs when the actuator possesses insufficient torque capacity to move the valve from the closed or open position. If a signal is sent to the actuator to open or close the valve, the position limit switch is monitored to see if it resets (see section on Limit Switch Settings in the L120 or LY Instruction Manual). This can only occur if the actuator has rotated sufficiently in the reverse direction (2°-5°) for the limit switch to trip to its mid-travel state. If no reset is received the unit will automatically initiate the jammed valve sequence.

A signal to reverse the direction is sent for 0.5 second, then a further signal is applied in the initial direction. If the limit switch resets then the valve and the actuator will resume normal operation. If no reset is detected for the second time, the UEC-3 will inhibit any further electrical operation while the signal is maintained and will de-energize the monitor relay to indicate a valve jammed fault.

The jammed valve state can be reset by operating the valve manually with the handwheel. This resets the position limit switch, which is detected by the UEC-3, and normal control is resumed in both 'Remote' and 'Local' modes. It can also be reset by removing the existing signal (if maintained), and then sending another 'Open' or 'Close' command, either in 'Local' or 'Remote' mode. This is not recommended since the valve is already jammed.

2.2 Anti-Torque Switch Hammer Protection

Torque switch hammer may occur when a 'maintained' control signal is present and the gearing in the actuator is non-locking. The torque switch opens, then recloses, and results in rapid, repeated energizing and de-energizing of the actuator.

Torque switch hammer is prevented by monitoring the torque switch in both the open and close directions. Once the torque switch has operated by the valve hitting an obstruction or, if torque seating is selected, by reaching the end of travel, the actuator will inhibit any further operation in the same direction. If an obstruction is met, the actuator will operate only in the reverse direction. This allows the actuator to back out of any obstruction.

2.3 Instantaneous Reversal

To reverse the direction of travel in either the 'Local' or 'Remote' mode it is not necessary to stop the actuator. The unit has a built-in time delay of 0.5 second when the motor is reversed in order to reduce current surges.

Q-Pulse Id TMS783
Active 29/01/2014
Page 21 of 1

2.4 Opto-Isolated Inputs

The use of opto-isolators on all remote control inputs protects the internal control logic circuits from high voltage transients. The current drawn on each externally fed remote signal is 4mA @ 24 Volts DC and will be proportional at other voltages.

2.5 Motor Thermal Protection

All Limitorque motors are fitted with a thermostat embedded in the windings with normally closed contacts. Should the motor overheat, the contacts will open, de-energizing the contactors and inhibiting any further operation until the motor has cooled sufficiently for the thermostat contacts to close again. The operation of the thermostat may be ignored when a maintained remote ESD signal is present by selection of a DIP switch (see **Section 6** for DIP switch settings).

2.6 Emergency Shutdown (ESD) - for ROM versions 1.41 or higher

A remote signal can be applied to User Digital Input 0 which will override any other command signal when the actuator is in the REMOTE mode. (Note: If a maintained ESD signal is applied when the actuator is in the LOCAL mode, the signal will be acted upon immediately when the actuator is switched from LOCAL to REMOTE.) If the field unit is equipped with ROM version 1.41 or higher, it can be configured with ESD Override so that a maintained ESD signal will be active in the LOCAL and OFF selector switch positions as well as the REMOTE position. The procedure for changing the ESD Override configuration is given in **Section 8.2**.

The actuator will act on the ESD signal to close the valve, open the valve, stay-put (stop) or ignore it, depending on the configuration of the unit (See **Section 6** for setup information). An active ESD signal **will** override inhibit signals, Torque Switch trip, local STOP and subsequent commands.

Motor thermostat protection can be bypassed by DIP switch selection so that it is not active during ESD operations.

If the ESD signal is removed, ESD operation will be terminated by any of the following:

1. Subsequent remote command signal
2. Motor Thermostat trip
3. Torque switch trip
4. Power loss
5. End-of-travel limit switch (if in position seated mode)
6. Switching from REMOTE to LOCAL
7. Pressing the local STOP button when in local or remote mode

Refer to **Section 6** for DIP switch settings and connection details.

2.7 Monitor Relay

The monitor relay provides immediate indication of problems that disable valve operation. The relay has a normally open contact and a normally closed contact (1 single-pole double-throw - SPDT - contact).

The relay is energized when the actutator power supply is present and the circuits being monitored are in a normal/healthy state. The Monitor relay automatically reverts to the energized state when monitored faulty states have been corrected. The relay will de-energize if any of the following states occur:

1. Local / Off / Remote selector switch is NOT in 'Remote' mode.
2. A lost phase has been detected.
3. Loss of internal power supply.
4. Motor thermostat has tripped due to the overheating of the motor.
5. Jammed Valve detected
6. Contactor fails to energize. (This is active only while the command signal is present).
7. Either torque switch tripped.

The conditions that cause the relay to de-energize can be configured (see **Section 8.6**)

2.8 Torque or Position Seating

Either torque or position seating may be selected without any wiring changes by making the appropriate selection on the DIP switches (see **Section 6** for DIP switch settings).

When TORQUE SEATING is selected, the position limit switches must still be set to trip at both ends of travel. This enables the logic controls to differentiate between torque switch operation under normal seating conditions and a mid-travel obstruction. Refer to 'L120 or LY Series Instruction and Maintenance Manual' on Torque Switch setting.

For POSITION SEATING see 'L120 or LY Series Instruction and Maintenance Manual' on Limit Switch Setting.

2.9 Electrical Interlock / Inhibit Circuits

The interlocks inhibit electrical operation in either the open or close direction. With the setup switch set to ON (see **Section 6** for DIP switch settings and connection details), any signal to open or close the valve will be ignored when there is a remote signal to the 'Open Inhibit' terminal for opening the valve or 'Close inhibit' terminal for closing the valve.

This feature can be used to inhibit electrical operation completely (i.e. functional lockout) or inhibit the actuator until another operation has been completed (i.e. interlock on a sequence control system).

Note

This is effective in both the 'local' and 'remote' modes. If an ESD signal is received, the interlocks will be overridden.

2.10 Remote Control Supply

The remote control inputs can be powered by the internal 24 Volt DC supply incorporated in the actuator (maximum external load - 6 Watts). This supply can be used over long distances because the input circuits require a low switching current (max. 4mA), which virtually eliminates problems due to voltage drop and induction. Alternatively, an external control supply in the range of 24 - 125 Volts AC or DC can be used to source the remote inputs.

Note

If an external supply greater than 90 volts is to be used, the link (LK1) on the Termination/Interconnect Board must be removed.

Caution

Never attempt to connect an external supply to the +24 volt DC or 24 volt DC common terminals (TB1-6 or 7 and TB1-13 or 14).

2.11 Remote 2, 3 and 4-Wire Control

2.11.1 2-Wire Control

Remote control of the actuator is possible by connecting a single contact (e.g., switch, relay etc.) between two terminals. When the contact is closed the actuator will travel in one direction and in the reverse direction when the contact is open. The direction of travel is determined by setting the appropriate DIP switch.

2.11.2 3-Wire Control

3-Wire Control can function in two selectable modes:

In the Maintained Mode, the actuator will accept momentary signals to open and close the valve and will continue until the valve fully opens or closes or a signal to reverse direction is received.

In the Inching Mode, the actuator performs the commanded action only while the signal is present. If the OPEN or CLOSE pushbutton is released, the actuator stops. This permits intermediate valve positions between open and closed.

2.11.3 4-Wire Control

In 4-Wire Control, the actuator responds to OPEN or CLOSE signals in the manner of the Maintained mode explained above. However, in 4-Wire Control a STOP button is added which stops the actuator when pressed. This permits intermediate valve positions between open and closed.

Refer to **Section 6** for DIP switch settings and connections for 2, 3, or 4-Wire Control.

2.12 Clockwise / Counter Clockwise to 'Close' Rotation

This is normally pre-set at the factory in accordance with the customer's requirements. It can be changed on site by DIP switch selection. The factory default setting is CLOCKWISE to close if no direction is specified when the order is placed.

2.13 Power Supply

2.13.1 Auto Phase Correction

The UEC-3 monitors the phase rotation of the incoming 3-phase supply and automatically corrects the actuator controls to ensure that the motor always runs in the correct direction. The feature is selectable ON/OFF according to customer preference.

A yellow LED (see **Figure 5-1** for location) illuminates when the phases are correctly connected. This feature enables the user to check that the phase rotation of the supply is correct.

Caution

If the motor is replaced during the life of the actuator, it is important to connect the leads correctly to ensure proper rotation.

2.13.2 Phase Protection

In addition to monitoring phase rotation, the phase discriminator also detects whether all three phases are present. If any phase is lost, then operation of the actuator will be prevented. A red LED on the power supply board illuminates when all three phases are present.

This feature is selectable ON/OFF in later versions of the UEC-3 and UEC-3-MPC. (See **Section 6.4**)

Note

If an ESD signal is received and then one of the phases is lost, the logic controls will ignore the phase protection circuit and attempt to comply with the ESD signal.

2.13.3 Supply Voltage Setting

The transformer voltage setting is factory set for the supply voltage specified at the time of the order and should not require changing.

Transformer Voltage Options:

Type A. Standard transformer Type B. Optional transformer

Nominal Tap		Nominal Tap	
A	460	A	575
B	415	B	525
C	380	C	220
D	220	D	115

2.14 Two-Speed Opening and Closing

A 2-speed pulsing timer is a standard feature of the UEC-3 and can be selected to operate in the opening and/or the closing direction. This enables the operating time of the valve to be increased for the prevention of hydraulic shocks, (e.g. water hammer) in the pipeline.

For L120 series actuators, pulsing operation will begin when the contacts of Gear Limit Switch 14 are made, and will be the same for both directions of travel. This switch may be set anywhere in the valve travel. For LY units, switch LS9 is used.

The 'ON' and 'OFF' pulse times are factory-set at default levels of 2.0 second 'ON' and 10.0 seconds 'OFF' but may be configured to different intervals on receipt of specific details from the user, prior to manufacture. The settings may also be reconfigured on site using a Personal Computer and 'Modsim'. Modsim is a Modbus software package provided by Limitorque. This procedure is described in **Section 8.1.**

2.15 Local Position / Running Indication

When the actuator is operating, the LED's on the local pushbutton station will 'flash' to indicate the direction of travel. At the end of travel, one LED will change to 'steady' to indicate the valve position and the other LED will turn off.

On a standard pushbutton station the 'state' of the colored LEDs will indicate the following in local or remote mode:

Red ON / Green OFF = Valve Fully Open
Red OFF / Green ON = Valve Fully Closed
Red ON / Green ON = Intermediate Position
Red ON / Green flashing = Valve Closing
Red flashing / Green ON = Valve Opening

An alternate configuration can be specified in which:

Red ON / Green Off = Valve Fully Closed
Red OFF / Green ON = Valve Fully Open
Red ON / Green ON = Intermediate Position
Red ON / Green flashing = Valve Opening
Red flashing / Green ON = Valve Closing

3. UEC-3-MPC Modulating Position Controller

The UEC-3-MPC is a model of the UEC-3 which accepts a 4-20 mA signal from a set point controller or similar device to position the valve in proportion to the current signal. The UEC-3-MPC contains standard UEC-3 hardware, plus the addition of a feedback potentiometer, analog interface board, and an analog to digital (A/D) converter. All necessary software to run the UEC-3-MPC as a modulating position controller is installed in read-only memory.

The UEC-3-MPC retains all the basic UEC-3 features as set by DIP switches S1 and S2 except for 2, 3 and 4-Wire Control. The additional configuration required for modulating position control is programmed through an Extended Configuration feature as explained in **Section 7**. First, this mode is selected by setting three switches on DIP switch S2 to the ON position. Then, other switches on DIP switches S1 and S2 are used to set individual parameters. In this way it is possible to configure the unit step by step, write each selection to memory, and test the response of the actuator to the 4-20 mA analog command signal. When the configuration performs as required, it can be transferred from temporary memory (RAM) to memory which will be retained even with power off (EEPROM). This can be done without the use of any additional equipment, such as setting tool or Personal Computer. The Extended Configuration can also be performed with a Personal Computer and Modsim software.

The following parameters can be configured/calibrated:

Set OPEN reference } ZERO and SPAN
Set CLOSE reference }
Set PROPORTIONAL BAND from 1% to 50% max.
Set DEADBAND from 1% to 50%
Set ACTION ON LOSS OF COMMAND; either 'OPEN', 'STOP" or 'CLOSE'.

Notes

1.) Loss of signal is detected if the analog command falls below 50% of the minimum setting, e.g. 2 mA for a 4-20 mA setting range.
2.) The UEC-3-MPC is capable of modulating control over 96% of its range. When the input corresponds to the last 2% of the range on either end of travel, the Field Unit will force the actuator to the limit switch. This can be changed (see Section 8).

As soon as the configuration is completed, the EXTENDED CONFIGURATION mode is switched 'OFF' and the DIP switches S1 and S2 are returned to their correct positions for the basic UEC-3 features selected. Full setting instructions are included in **Section 7** of this manual.

This page is intentionally blank.

4.Options

4.1 4-20mA Position Transmitter (PT20SD)

The PT20SD is a resistance to current (R/I) signal converter. It utilizes a potentiometer driven from the Mechanical Dial Position Indicator gearing (MDPI) to provide an output of 4-20 mA which is proportional to the output position of the actuator / valve. A D.C. voltage is applied across the potentiometer and a proportion of that voltage is picked off by the wiper. This voltage is proportional to position and is used to drive an operational amplifier. The amplifier circuit has user adjustable controls for setting the 4 mA (zero) and the 20 mA (span) levels at each end of travel. Full calibration instructions are included on **Figure 6-8** of this manual.

4.2 Potentiometer

If a potentiometer is fitted, connect as shown in the connection diagram in **Figure 6-7.**

4.3 Diagnostic Tools

A port is provided as a standard feature for the connection of a Personal Computer (with Modsim software) or the handheld Universal Diagnostic Tool (UDT). The Personal Computer with Modism Software provides an extensive configuration and diagnostic capability for those situations where the use of a Personal Computer is feasible. The UDT provides a compact and easy to use diagnostic capability.

The UDT directly indicates the following states:

Open Torque Switch

The torque switch, in the opening direction, has tripped between position limits.

Close Torque Switch

The torque switch, in the closing direction, has tripped between position limits.

Open Limit Switch

The Open limit switch has tripped.

Close Limit Switch

The Close limit switch has tripped.

Open Inhibit

The Open inhibit signal is present.

Close Inhibit

The Close inhibit signal is present.

Q-Pulse Id TM3783 Active 29/01/2014 Page 29 of 13

Lost Phase

Phase L2 has been lost (If phases LI or L3 have been lost, the UEC-3 will not be powered).

Reversed Phase

The three phase supply connections are reversed.

Thermostat Tripped

The motor thermostat has tripped due to motor overheating.

ESD Signal Present

An ESD signal is present at the terminals.

Not in Remote Mode

The actuator is in LOCAL or OFF mode.

Close Contactor Failed

The Close contactor failed to operate after being signaled.

Open Contactor Failed

The Open contactor failed to operate after being signaled.

Valve Jammed

The jammed valve sequence has been initiated but has not been successful.

Communication Failure

No communication through the diagnostic port.

5. UEC-3 Control Module

The UEC-3 and UEC-3-MPC Control Module shown in **Figure 5-1** contains a set of circuit boards, a contactor, and a set of interconnecting cables.The standard circuit boards are:

5.1 Single Board Computer (SBC)

This board contains a processor and support circuits to perform all monitoring, control, and operator interaction functions. The SBC is shown in **Figure 5-2.**

5.2 Power Supply Board

The Power Supply Board provides the voltages required by the Single Board Computer and the Input/Output circuits. There are two versions of this board and both are shown in **Figure 5-3**.

5.3 Termination/Interconnect Board

This board contains connectors and terminal strips and serves as the interface between the Control Module and everything outside the Control Module. All user connections are made to this board. The Termination/Interconnect Board is shown in **Figure 5-4.**

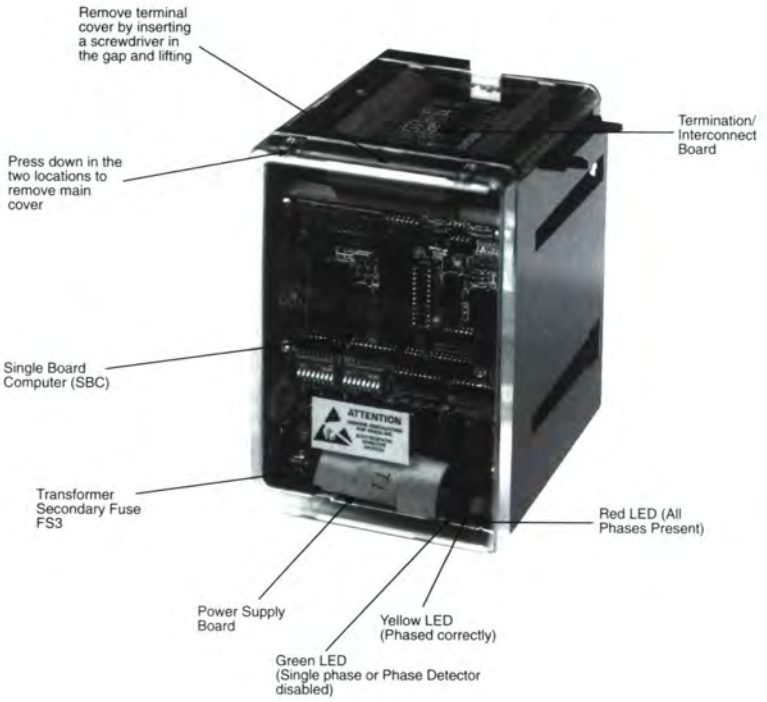

Danger!

Hazardous voltage within the control module. Exercise caution while calibrating the UEC-3 with the actuator control compartment open and power on.

Figure 5-1: UEC-3 and UEC-3-MPC Control Module

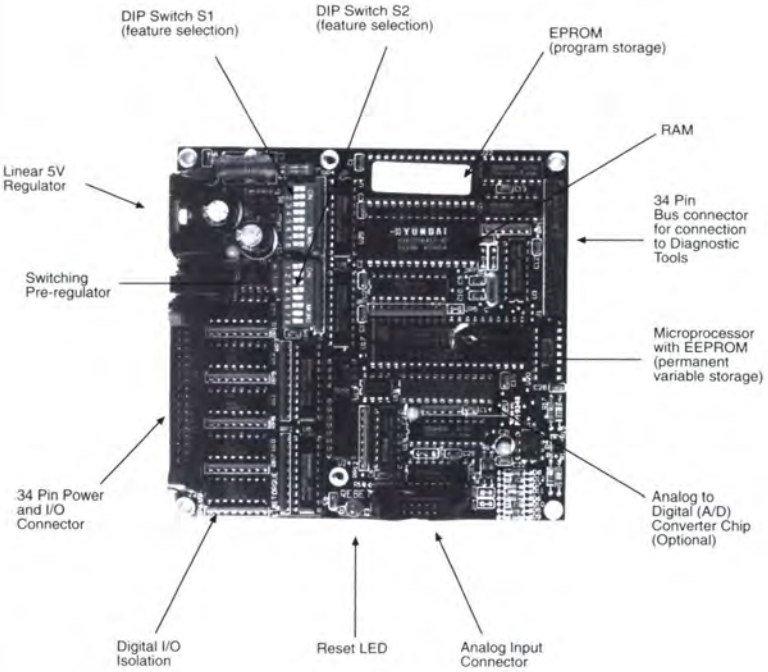

Note

Reset LED (Red) will be continuously 'ON' when the controller is healthy. A very short 'OFF' pulse, repeated at regular intervals, will indicate a fault within the controller.

Figure 5-2: Single Board Computer

Q-Pulse Id TMS783 Active 29/01/2014 Page 33 of 134

Earlier Version

Primary Fuses
FS1 & FS2 - 250mA for three-phase operation
FS1 & FS2 - 750mA for single-phase operation

Transformer Tapping to
suit Incoming Power Supply.

Voltages shown are typical only.
Available Voltages include:

Type A Standard Transformer	Type B Optional Transformer
460V	575V
415V	525V
380V	220V
220V	115V

Secondary Fuse
FS3 - 1.0A

Yellow LED
(Phases correctly
connected)

Red LED
(all phases
present)

Later Version

Primary Fuses
FS1 & FS2 - 250mA
for three-phase operation

FS1 & FS2 - 750mA
for single-phase operation

Transformer
Tapping to suit Incoming
Power Supply.

Voltages shown are typical only.
Available Voltages include:

Type A Standard Transformer	Type B Optional Transformer
460V	575V
415V	525V
380V	220V
220V	115V

Single
Phase/Three
Phase Jumpers

Secondary Fuse
FS3 - 1.0A

Green LED
(Single phase or phase
detector disabled)

Yellow LED
(Phases correctly
connected)

Red LED
(all phases
present)

Figure 5-3: Power Supply Board

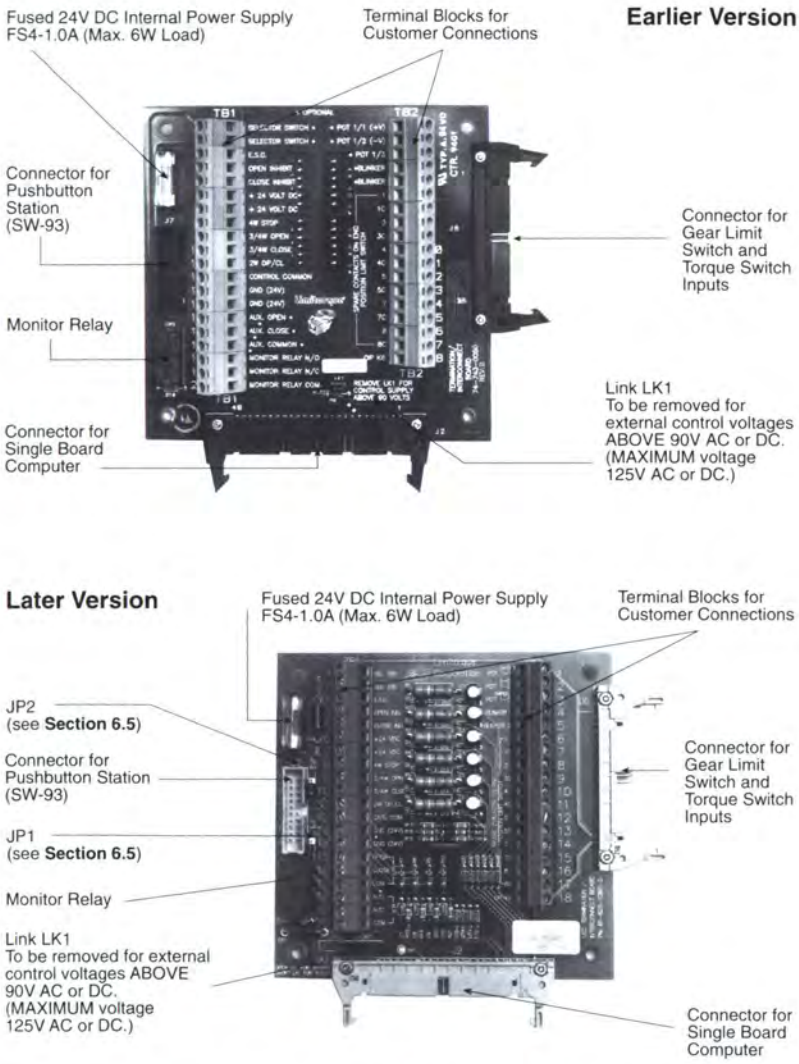

Figure 5-4: Termination/Interconnect Boards

This page is intentionally blank.

6. UEC-3 Set Up - Wiring and Switch Settings

6.1 General Set-Up Information

The actuator must first be set up as instructed in the 'LI20 or LY series Instruction and Maintenance Manual' taking note of the Installation Tips.

This unit should have left the factory set for your requirements. If the requirements were not known at the time or a change is required, the following procedure must be performed.

Caution

Ensure actuator is isolated from all incoming power.

Remove front cover by pressing down with both thumbs on top edge of cover in the approximate area indicated in **Figure 5-1** of this manual. Remove the terminal cover by inserting a screwdriver in the gap as shown on the cover and lifting.

Note

Always use a small non-metallic tool to move the DIP switches; NEVER use a pencil.

A label is attached to the side of each Control Module. This label (shown in **Figure 6-1**) is stamped at the factory to indicate the model, the options installed, the input voltage setting, and the serial number. The portion of the label showing the settings for S1,S2, S3 (DDC only), and LK1 are available for the user to show the specific configuration information.

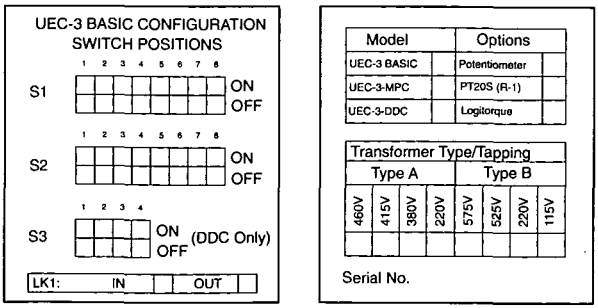

Figure 6-1: Model, Option, and Configuration Identification Label

6.2 Default DIP Switch Settings

If specific configuration details were not provided with the order, the unit was shipped with the DIP switches set to their default positions. **Figure 6-2** shows the default settings for S1 and S2 of the UEC-3 and the UEC-3-MPC. The settings for these switches for the UEC-3-DDC are discussed in other manuals.

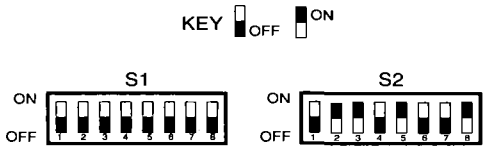

Figure 6-2: Default DIP Switch Settings for UEC-3 and UEC-3-MPC

'ESD' action - 'CLOSE' - S1-1,-2
Local inching - DISABLED - S1-3
Modulating mode - DISABLED - S1-4
Slow speed opening - DISABLED - S1-5
Closing rotation - CLOCKWISE - S1-6
Thermostat bypass - DISABLED - S1-7
Interlock / Inhibit - DISABLED - S1-8

Remote control mode - 4 WIRE - S2-1,-2-3
Seating method at 'close' - POSITION - S2-4
Autophase control - ENABLED - S2-5
Slow speed closing - DISABLED - S2-6

NOTE: FOR A STANDARD UEC-3 ALWAYS SELECT:

EEPROM - DISABLED - S2-7
Software Control - ENABLED - S2-8

Note

If changes to the DIP switches are made while power is present at the actuator, it is important to power 'off' and then back 'on' again in order to initialize the changes.

6.3 Wiring and DIP Switch Settings

The functions of each of the switch sections of DIP switches S1 and S2 are given in **Figure 6-3** for the UEC-3, and in **Figure 7-3** for the UEC-3-MPC.

Configuring the UEC-3 for Two, Three, and Four Wire control is detailed in **Figure 6-4**.

Figure 6-5 gives wiring and switch setting options for Emergency Shutdown (ESD) for the UEC-3 and the UEC-3-MPC.

Electrical Interlock/Inhibit wiring and switch selectable options for the UEC-3 and the UEC-3-MPC are given in **Figure 6-6**.

Wiring for the Monitor Relay and for the optional Potentiometer are shown in **Figure 6-7** for the UEC-3 and the UEC-3-MPC.

Wiring and calibration for the optional PT20SD Position Transducer are given in **Figure 6-8**.

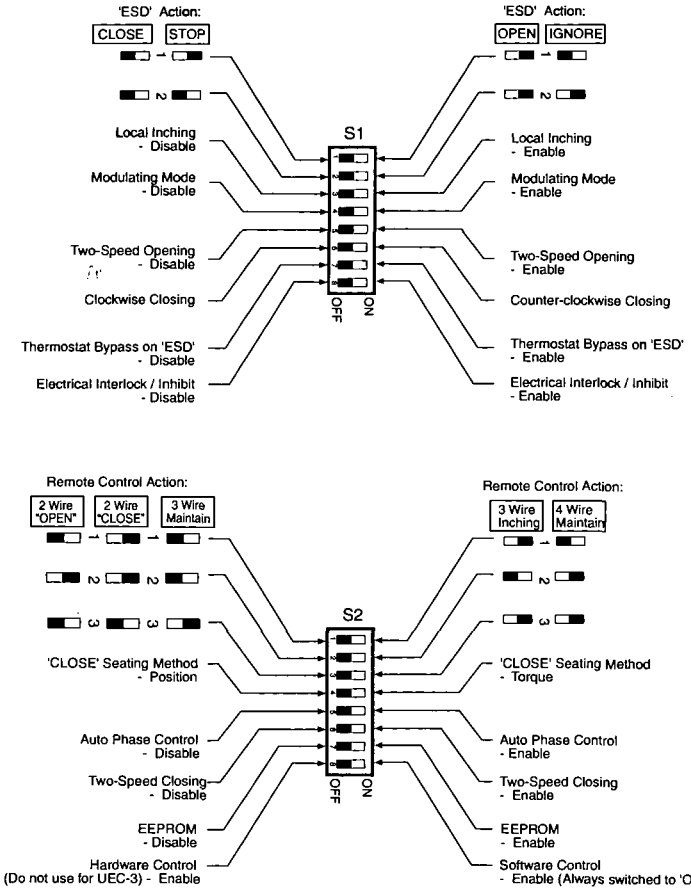

Caution

The following features should not be used together. Using these features together can result in unpredictable operation of the unit:

- **Modulating control and Two-speed operation**
- **Torque Seating and Two-speed operation**
- **Modulating control and 2-, 3-, or 4-wire control**

Figure 6-3: Functional Key TO UEC-3 DIP Switch Settings

Internal Control Supply
24 Volt DC - Positive switching only

2 WIRE CONTROL*

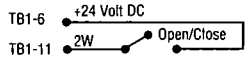

DIP switches can be set to give:
EITHER - Contact closed - Valve OPENS
Contact opened - Valve CLOSES
OR - Contact closed - Valve CLOSES
Contact opened - Valve OPENS

Switch Settings

Contact closed - Valve OPENS

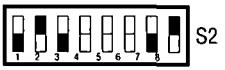

Contact closed - Valve CLOSES

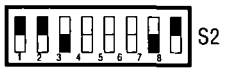

External Control Supply
24 - 125 Volts AC or DC

2 WIRE CONTROL*

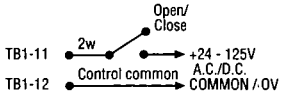

ALL VOLTAGES OVER 90V A.C./D.C. REMOVE LINK (LK1) ON TERMINATION BOARD

3 WIRE CONTROL*

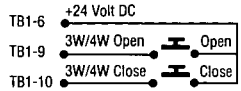

To initiate action - 'Open' or 'Close': Contact to be closed momentarily for MAINTAINED mode or for longer duration (as necessary) in INCHING mode.

3 Wire MAINTAINED control

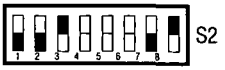

3 Wire INCHING control

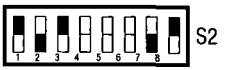

Note: For 'LOCAL' Inching set S1 position 3 to ON - Refer to **Fig.6.3**

3 WIRE CONTROL*

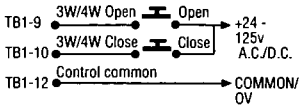

ALL VOLTAGES OVER 90V.A.C./D.C. REMOVE LINK (LK1) ON TERMINATION BOARD

4 WIRE CONTROL*

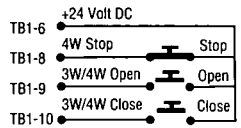

To initiate action - 'Open' or 'Close': Contact to be closed momentarily. 'Stop' contact to be opened momentarily.

4 Wire control with STOP

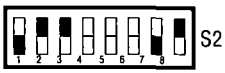

4 WIRE CONTROL*

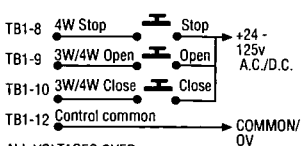

ALL VOLTAGES OVER 90V A.C./D.C. REMOVE LINK (LK1) ON TERMINATION BOARD

*To configure the user inputs, see **Section 8.3**.

Figure 6-4: UEC-3 - Two, Three, and Four Wire Control

Internal Control Supply
24 Volt DC - Positive switching only

Emergency Shut-Down (ESD)

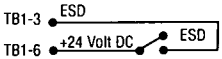

Note:
To initiate 'ESD' action contact to be closed and will only be active when actuator is in 'Remote' mode.

See **Section 2.6** for a description of ESD action.

See **Section 8.3** to configure User Inputs.

Switch Settings

CLOSE on ESD signal

OPEN on ESD signal

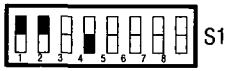

STAYPUT or STOP on ESD signal

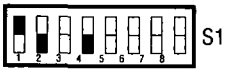

IGNORE ESD signal

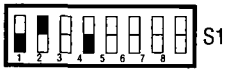

External Control Supply
24 - 125 Volts AC or DC

Emergency Shut-Down (ESD)

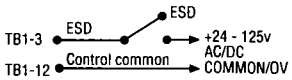

* ALL VOLTAGES OVER 90V AC/DC REMOVE LINK (LK1) ON TERMINATION BOARD

Notes:
1) S2 must be set for the appropriate remote control (See **Fig. 6.4**).

2) Mixed voltages can NOT be used. ESD supply MUST be the same as remote control supply.

3) Same connections and DIP switch settings to be used for UEC-3-MPC.

Figure 6-5: UEC-3 and UEC-3-MPC - Emergency Shutdown (ESD)

Internal Control Supply
24 Volt DC - Positive switching only

Electrical Interlock / Inhibit

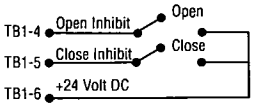

Note:
To initiate INTERLOCK INHIBIT, contact to be closed and remain closed for as long as inhibit is required to be active.

Switch Settings

Enable Open & Close Interlock/Inhibit

Disable Open & Close Interlock/Inhibit

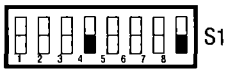

External Control Supply
24 - 125 Volts AC or DC

Electrical Interlock / Inhibit

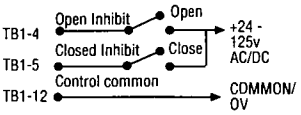

* ALL VOLTAGES OVER 90V AC/DC REMOVE LINK (LK1) ON TERMINATION BOARD

Notes:
1) S2 must be set for the appropriate remote control (See **Figure 6.3 or Figure 7.3**).

2) Mixed voltages can NOT be used. Inhibit supply MUST be the same as remote control supply.

3) Same connections and DIP switch settings to be used for UEC-3-MPC.

4) See **Section 8.3** to configure User Inputs.

Figure 6-6: UEC-3 and UEC-3-MPC - Electrical Interlock/Inhibit

Monitor Relay

Relay is energised in NORMAL (healthy) state.

Relay is de-energised in ERROR state.

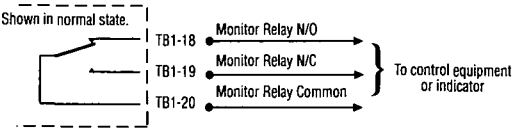

Maximum rated load: 0.6 A @ 125 VAC : 2 A @ 30 VDC : 0.6 A @ 110 VDC

Notes:
To configure the Monitor Relay acuation conditions, see **Section 8.6**.

Option

Potentiometer (R1)

Standard Potentiometer 1K ohms

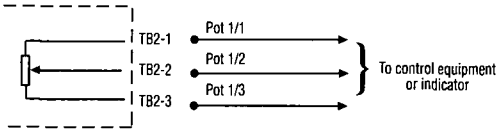

Calibration Procedure:

1. Position the actuator to mid-travel (valve at 50% position).

2. Disconnect the potentiometer wiring harness and measure the resistance from each end connection to the center connection.

3. To set the potentiometer to the correct resistance reading, loosen the set screw that retains the spur gear on the potentiometer shaft and rotate the shaft until a reading of 500 ohms is achieved

4. Tighten the set screw and re-connect the wiring harness

Notes:
1) This option is not available if 4-20MA Transmitter (PT20SD) is fitted. (See **Figure 6-8**)

2) Same connections to be used for UEC-3-MPC.

Figure 6-7: UEC-3 and UEC-3-MPC - Monitor Relay and Optional Potentiometer

Calibration procedure

1. Position the actuator to mid-travel (valve at 50% Position).

2. Disconnect the potentiometer wiring harness from the PT20SD board and measure the resistance from each End connection to the center connection on the potentiometer.

3. To set the potentiometer to the correct resistance reading, loosen the set screw that retains the spur gear on the potentiometer shaft and rotate the shaft until a reading of 500(ohms) is acheived.

4. Tighten the set screw and re-connect the wiring harness to the PT20SD.

5. Run the actuator fully CLOSED.

6. Calibrate ZERO position by adjusting the zero potentiometer until a 4mA output signal is read at terminals TB2-1 and TB2-2.

7. Run the actuator fully OPEN.

8. Calibrate SPAN position by adjusting the span potentiometer until a 20mA output signal is read at terminals TB2-1 and TB2-2.

9. Repeat steps 5 to 8 and fine tune as necessary.

PT20SD Position Transmitter 4-20mA

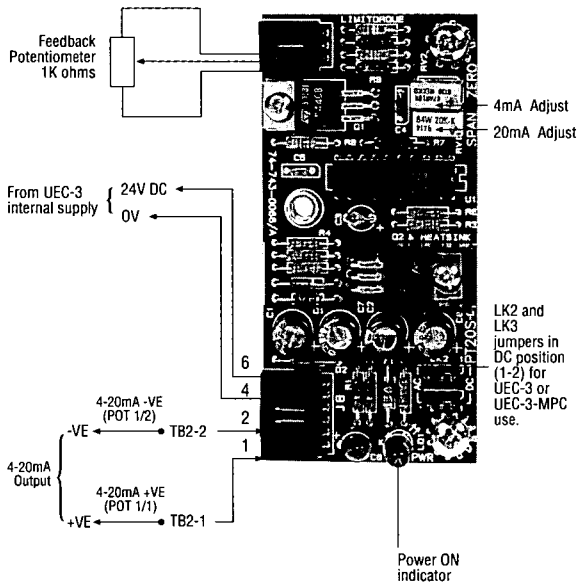

Specification

Output signal:.....4-20mA
Input potentiometer: .....1K (ohms)
Temperature rating:.....-40 to +85°C
Linearity error: .....± 1% max.
Loop resistence:.....370 (ohms) max.
Power:.....18 VAC or 24 VDC ± 10% (LK2 and LK3 must be set appropriately)

Important:
Analog inputs must not be connected to earth ground on +VE or -VE terminal.

Note:
Same connections to be used for UEC-3-MPC.

Figure 6-8: UEC-3 and UEC-3-MPC - PT20SD (4-20mA) Position Transducer Wiring

6.4 Phase Protection Jumpers

The phase protection feature can be disabled on most versions of the UEC-3 and UEC-3-MPC Field Units. If the Field Unit is equipped with the later version of the Power Supply Board (See **Figure 5-3**), this can be accomplished by changing jumpers. Three jumpers are located in a block just above the 50 pin connector, J2. For a three-phase supply, these jumpers are normally placed in the 3-PHASE positions, and for a single-phase supply, they are placed in the 1-PHASE positions. For three-phase operation without phase protection, the jumpers can be placed in the 1-PHASE positions. This will disable the phase protection feature which will be indicated by the green LED when the unit is powered.

6.5 Pushbutton Station Jumpers

There are two jumpers on the Termination/Interconnect Board which must be changed if the Field Unit is to be operated without a pushbutton station. JP1 and JP2 are located to the left of TB1 on **Figure 5-4** and should be set as shown below:

JP1 and JP2 Jumper Position	Application
1-2	No pushbutton station
2-3	Operation with SW-93 Pushbutton Station (Default)

This page is intentionally blank.

7. UEC-3-MPC Set Up

The actuator must first be set up as instructed in the 'L120 or LY Series Instruction and Maintenance Manual' taking note of the Installation Tips.

Because this unit will require individual calibration on site, the calibration is not performed by the factory. Please follow the calibration instructions below very carefully to ensure that you receive optimum performance from the unit.

Remove the front cover by pressing down with both thumbs on top edge of cover in the approximate area indicated in **Figure 5-1** of this manual. Remove terminal cover by inserting a screwdriver in the gap as shown on the cover and carefully lifting.

Note

Always use a small non-metallic tool to move the DIP switches; NEVER use a pencil.

Caution

To perform this calibration, the power must be 'on' to the unit. Hazardous voltages are present in the unit. Exercise caution to avoid electrical shock.

Calibration of the UEC-3-MPC is accomplished by carefully performing three separate procedures:

1. Calibrating the potentiometer.
2. Calibrating the control parameters of the Position Controller in EXTENDED CONFIGURATION MODE.
3. Setting DIP switches to restore UEC-3 functionality.

7.1 Default Levels

The following default levels are programmed in the Control Module and will provide satisfactory performance in most cases. We recommend not changing these values until the initial calibration has been completed, as below.

PROPORTIONAL BAND +/-14.0%

DEADBAND + /-1.0%

These parameters are defined in **Figure 7-1.**

Calibration positions

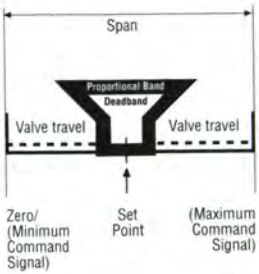

Definitions

Command Signal -
Input signal provided by user to assign desired valve position.

Deadband -
Adjust the maxium allowable error signal. (Difference between the Position Command Signal and position Feedback Potentiometer Signal).

Proportional Band (see Note) -
Controls the point on the scale of valve travel that the motor begins the pulsing mode. (Decreasing Proportional Band, increase Gain).

Set Point -
Desired stopping position for UEC-3-MPC; determined by the command signal.

Span -
Calibrates the UEC-3-MPC to align the Maximum Command Signal (normally 20mA) with the Position Feedback Potentiometer at the open position.

Zero -
Calibrates the UEC-3-MPC to align the Minimum Command Signal (normally 4mA) with the Position Feedback Potentiometer at the closed position.

Analog Interface

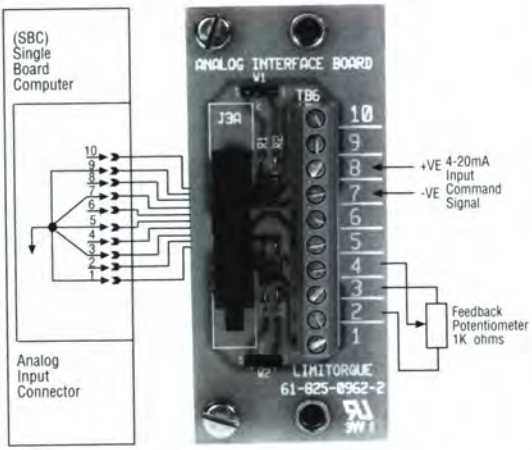

Jumper Settings
W1- not used in UEC-3 or UEC-3-MPC (Jumper position not important.)
W2 - Jumper 1-2 for feedback potentiometer.

Important:
Analog inputs must not be connected to earth ground on +VE or -VE terminal.

Note:
Proportional Band is inversely proportional to Gain.

Figure 7-1: UEC-3-MPC Control and Actuator Position Input Wiring

7.2 Procedure 1: Calibrate Feedback Potentiometer

1. Switch the power to the actuator OFF.

2. Position the actuator to mid-travel (valve at 50% position).

3. Disconnect the potentiometer wiring harness and measure the resistance (ohms) from the wiper to either end of the potentiometer.

4. To set the potentiometer to the correct resistance reading, loosen the set screw on its spur gear and rotate its shaft until a reading of 500 ohms is achieved.

5. Tighten the set screw and reconnect the wiring harness.

7.3 Procedure 2: Calibrate UEC-3-MPC Control Parameters

The procedure that is given below is also given in the form of a flow chart in **Figure 7-2**.

To calibrate the UEC-3-MPC it is necessary to switch the DIP switches to an EXTENDED CONFIGURATION MODE. This mode provides a different set of meanings in software to all the switch positions than those for standard UEC-3 functions.

These switches are used to program the performance of the actuator by resetting some of the parameters which are then transferred (written) into the memory of the controller via EEPROM. These parameters can be changed at any time by following the simple steps detailed below:

Note
BEFORE proceeding further, we recommend recording the current UEC-3 DIP switch configuration for future reference.

6. Ensure that power to the actuator is 'OFF'.

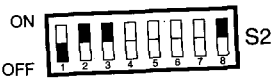

Set S2 as above.

Note
At this point switches S2-4,5,6, and 7 should be in the states which are appropriate for the application (see Figure 7-3) unless the unit has been calibrated and only the proportional Band and/or the Deadband is to be adjusted. In this case, S2-7 should be ON at this point.

Switch power to the actuator, 'ON'.

7. Set in EXTENDED CONFIGURATION MODE.
Wait approx. 15 seconds for the completion of 'POWER On Self Test' - LEDs on the pushbutton station will illuminate.

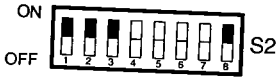

Set switches as above.

8. Set 'SPAN' Reference (Fully Open) - MUST BE SET FIRST.

Set switches as above. With the pushbutton control station set to 'LOCAL', run the actuator to the fully open position. Apply the analog command signal that applies to this position. i.e. 4mA or 20mA (the choice depends upon the application).

Reverse the position of S2-4 to write this setting to RAM, i.e. reverse position of switch, 'OFF' to 'ON' or 'ON ' to 'OFF'. Do NOT change command signal until actuator is fully clockwise .

9. Set 'ZERO' Reference (Fully Closed)

Set switches as above.

Run the actuator to the fully closed position.

NOW apply the analog command signal that applies to this position (i.e. 4mA or 20mA).

Reverse the position of S2-4 to write this setting to RAM.

10. Set ACTION ON LOSS OF SIGNAL

Set switches as above.

Set the positions of S1-1 and S1-2 to suit the action required of the actuator on loss of analog command signal - detected when signal falls below 50% of 'ZERO' value. i.e. 2mA if 'ZERO' value is 4mA.

The options are shown below:

GO TO CLOSE (FULLY CLOCKWISE)

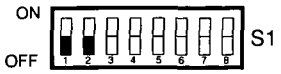

STOP IN LAST POSITION

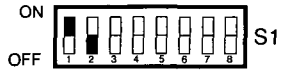

GO TO OPEN (FULLY COUNTER CLOCKWISE)

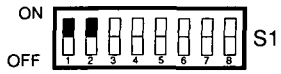

Set switches to correspond to your application and then reverse the position of S2-4.

11. Test RESPONSE TO SIGNAL

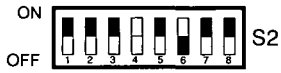

Set switches as above.

Reverse the position of S2-4. Switch selector on pushbutton station to 'REMOTE'.

Apply the external 4-20mA analog command signal and test the operation of the actuator in response to this variable command.

IF PERFORMANCE IS SATISFACTORY then proceed as follows. IF NOT THEN SKIP TO STEP 14.

12. Transfer CONFIGURATION from RAM to EEPROM.

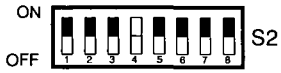

Set switches as above.

Reverse the position of S2-4 to transfer all the configuration settings from RAM to the non-volatile EEPROM memory.

13. Exit from the EXTENDED CONFIGURATION MODE.

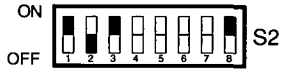

Set switches as above.

Now proceed to set in new parameters on DIP switches SI and S2 for the basic functioning of the UEC-3. Note that S1-4 MUST be 'ON' to enable MODULATING MODE. All features are available with the exception of 2,3 and 4-wire control.

Skip to **Section 7.4**

IF THE DEFAULT LEVELS FOR PROPORTIONAL BAND AND DEADBAND PROVE TO BE UNSATISFACTORY FOR YOUR APPLICATION THEN PROCEED AS FOLLOWS BEFORE PROCEEDING WITH STEPS 12 AND 13.

14. Set PROPORTIONAL BAND. This is the point on the scale of valve travel, as a percentage of the full signal range, over which the controller will carry out pulse modulation as the actuator approaches the set point. See **Figure 7-1** for a full definition.

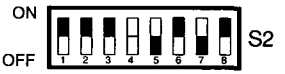

Set switches as above.

Now set S1, as shown in **Table 7-1**, to give the desired value.

Note

The default level for PROPORTIONAL BAND was factory set at + /-14.0%.

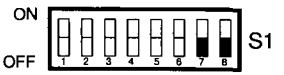

Reverse the position of S2-4. Repeat Step 11- Test RESPONSE TO SIGNAL.

If performance is now satisfactory, proceed to steps 12 and 13.

If not, then either repeat step 14 or proceed to step 15.

Table 7-1: Table of Values for Proportional Band and Deadband

%	DIP S1 12345678	%	DIP S1 12345678
1	10000000	26	01011000
2	01000000	27	11011000
3	11000000	28	00111000
4	00100000	29	10111000
5	10100000	30	01111000
6	01100000	31	11111000
7	11100000	32	00000100
8	00010000	33	10000100
9	10010000	34	01000100
10	01010000	35	11000100
11	11010000	36	00100100
12	00110000	37	10100100
13	10110000	38	01100100
14	01110000	39	11100100
15	11110000	40	00010100
16	00001000	41	10010100
17	10001000	42	01010100
18	01001000	43	11010100
19	11001000	44	00110100
20	00101000	45	10110100
21	10101000	46	01110100
22	01101000	47	11110100
23	11101000	48	00001100
24	00011000	49	10001100
25	10011000	50	01001100

15. Set DEADBAND

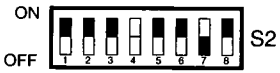

Set switches as above.

Now set S1, as shown **Table 7-1**, to give desired DEADBAND.

Note: The default level for DEADBAND was factory set at +/- 1.0%.

Reverse the position of S2-4. Repeat Step 11 - Test RESPONSE TO SIGNAL.

If performance is now satisfactory, proceed to Steps 12 and 13.

If not then repeat Step 15.

Note

Before ending this calibration procedure always complete Steps 12 and 13, otherwise all the settings will be lost. Also ensure that power is always 'on' until this has been done.

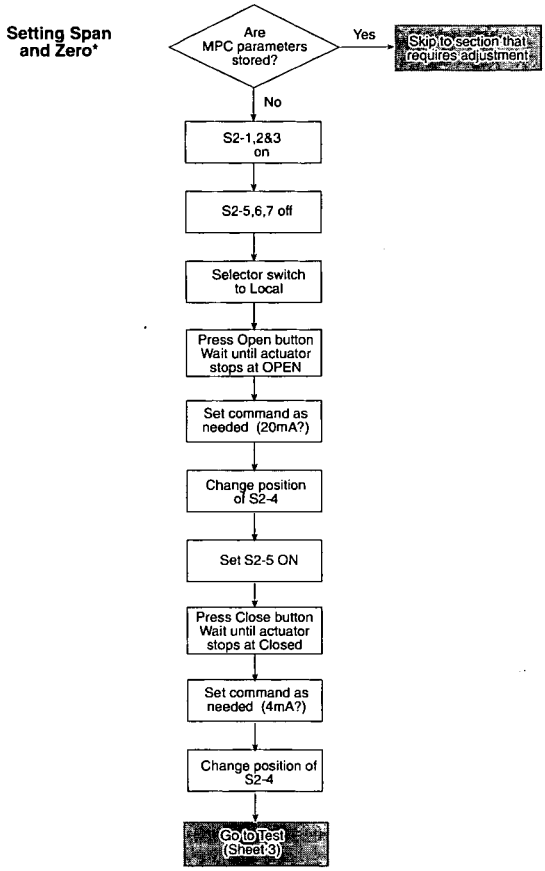

Note
Span and Zero reference must always be changed together.

Figure 7-2: UEC-3-MPC Calibration Procedure (Sheet 1 of 3)

Set Proportional Band

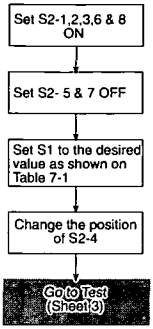

Note
The default level for proportional band was factory set at ± 14.0%.

Set Deadband

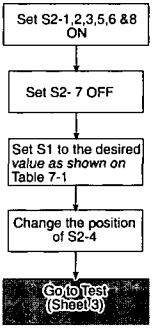

Note
The default level for deadband was factory set at ± 1.0%.

Figure 7-2: UEC-3-MPC Calibration Procedure (Sheet 2 of 3)

Q-Pulse Id TVS783 Active 29/01/2014 Page 55 of 134

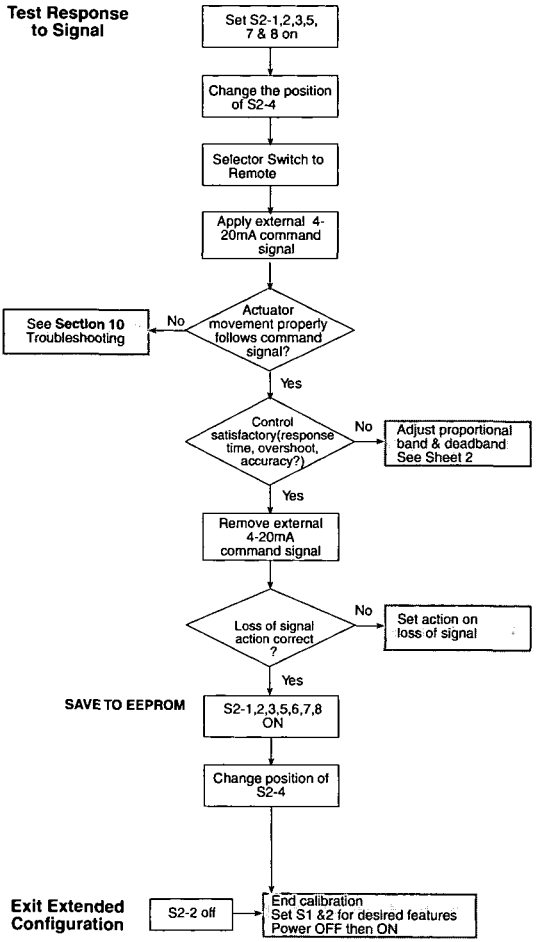

Figure 7-2: UEC-3-MPC Calibration Procedure (Sheet 3 of 3)

7.4 Procedure 3: Setting DIP Switches to Restore UEC-3 Functionality

The UEC-3-MPC, while in the modulating mode, retains all the functionality of the UEC-3, with the exception of 2,3, and 4-wire control.

Now proceed to set DIP switches SI and S2 to suit your requirements. A full list of all available features is shown in **Figure 7-3.** A typical example of settings that are in common usage is shown below.

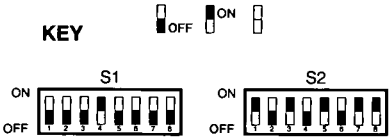

ESD action - 'CLOSE' - S1-1,-2
Local inching - DISABLED - S1-3
Modulating mode - ENABLED - S1- 4
Two-speed opening - DISABLED - S1 - 5
Closing rotation - CLOCKWISE - S1-6
Thermostat bypass - DISABLED - S1-7
Interlock / Inhibit - DISABLED - S1-8

Default after EXTENDED CONFIGURATION
- S2 -1,-2,-3
Seating method at 'close' - POSITION - S2 - 4
Autophase control - ENABLED - S2 - 5
Two-speed closing - DISABLED - S2 - 6

Note:For A Standard UEC-3 Always Select -

EEPROM - ENABLED - S2-7
Software control - ENABLED - S2 - 8

16. Switch power to the actuator OFF.

17. Set switches to suit your individual requirements.

18. Switch power to the actuator ON.

19. Check operation of actuator in LOCAL and REMOTE mode to ensure that correct settings have been made.

20. Record these settings on the label (shown in **Figure 6-1**) on the outside of the module.

Note

If changes to the DIP switches are made while power is present at the actuator, it is important to power 'off' and then back 'on' again in order to initialize the changes.

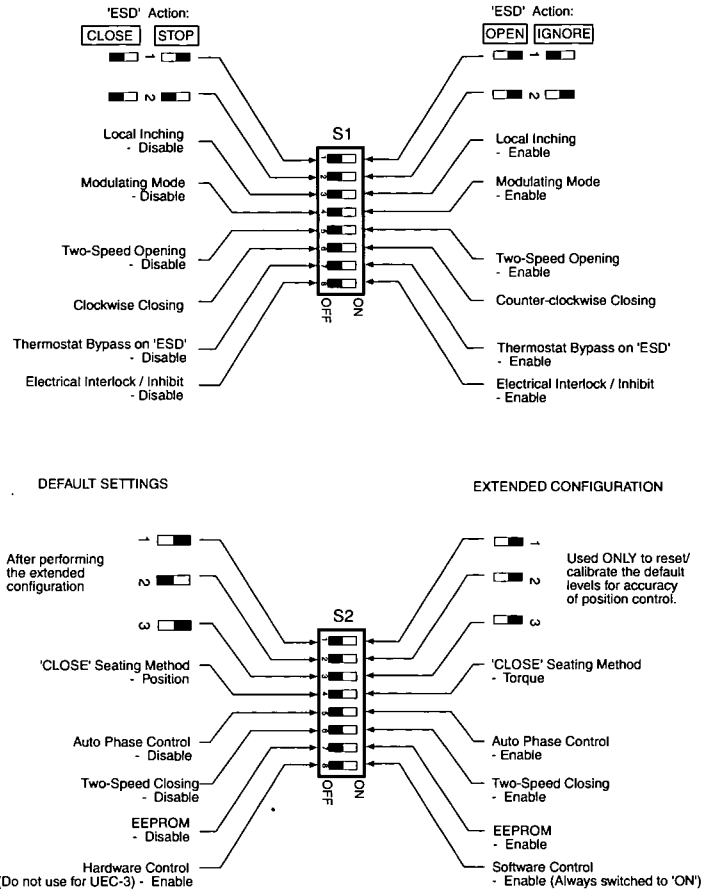

Caution

The following features should not be used together. Using these features together can result in unpredictable operation of the unit:

- **Modulating control and Two-speed operation**
- **Torque Seating and Two-speed operation**
- **Modulating control and 2-, 3-, or 4-wire control**

Figure 7-3: Functional Key to UEC-3-MPC DIP Switch Settings

8. Extended Configuration by Personal Computer

Almost all of the features of the UEC-3 and UEC-3-MPC Field Units can be configured by changes in DIP switch settings. There are, however, several features whose configuration settings can be changed from default values only by using a personal computer connected to the local serial port of the field unit.

In order to change these settings, several pieces of equipment and two manuals are required. These are listed below:

Equipment Requirements for UEC-3 and UEC-3-MPC Extended Configuration:

- IBM compatible personal computer: Laptop recommended for field use
- Serial Cable: Limitorque P/N 61-825-0931-1 for 9-pin PC serial port connectors or Limitorque P/N 61-825-0932-1 for 25-pin PC serial port connectors
- Serial Interface Adapter: Limitorque P/N 61-825-0951-3
- Modsim Manual: Limitorque Bulletin 435-23001
- Modsim Software version 3.11 or greater: Limitorque P/N EEC-MODSIM
- Optional: Calculator for Hexadecimal to Decimal to Binary conversion and calculations (the Microsoft Windows® calculator program will do this in Scientific Mode)

The subsections below contain descriptions of the features, the reasons for changing the settings, and detailed procedures for changing the settings. These subsections apply to both the UEC-3 and the UEC-3-MPC unless noted otherwise.

Please contact your local service center for assistance with or questions about these changes.

Caution

Extreme care should be taken when changing these settings. Undesirable actuator movement can result if settings are changed incorrectly or are changed to inappropriate values.

8.1 Set the OPEN Speed and Set the CLOSE Speed

8.1.1 Opening and Closing Speed

Slow speed or Two-speed operation is often desired to prevent water hammer, cavitation, vibration or other effects of fast valve motion. The UEC-3 implements slow speed operation by jogging the motor (short applications of power to the motor followed by periods of no power to the motor). The default slow speed duty cycle is two seconds of power on followed by 10 seconds of power off. This duty cycle is repeated as long as the OPEN or CLOSE command is

asserted.

Two-speed Opening and Closing can be independently selected. DIP switch S1-5 ON enables slow speed Opening, and DIP switch S2-6 ON enables slow speed Closing. Regardless of whether one or both are selected, two-speed is active when actuator Limit Switch 14 is closed.

The values that control the on and off times are stored in register 225 for two-speed opening and in register 226 for two-speed closing. The value of the opening on-time is stored in the high byte of register 225, and the value of the closing on-time is stored in the high byte of register 226. The value of the opening off-time is stored in the low byte of Register 225, and the value of the closing off-time is stored in the low byte of register 226.

The duty cycle can be changed in 50ms increments by using the 06 Modbus command to write values to registers 225 and 226 in the field unit. Increasing the ratio of on-time to off-time speeds the motor up (decreases total operating time). Conversely, decreasing the ratio of on-time to off-time slows the motor down (increases total operating time).

8.1.2 Changing the Opening Slow Speed

1. For the new opening slow speed on-time, calculate the value for register 225 high byte using equation A below. For the new opening slow speed off time, calculate the value for register 225 low byte using equation B below. Add the values calculated by equations A and B. This will be the new value that will be written into register 225.

Equation A

$$\text{New High Byte Value} = (\text{on-time(sec.)}) \times \frac{1000 \text{ msec.}}{1 \text{ sec.}} \times \frac{1}{50 \text{ msec.}} \times 256$$

Equation B

$$\text{New Low Byte Value} = (\text{off-time(sec.)}) \times \frac{1000 \text{ msec.}}{1 \text{ sec.}} \times \frac{1}{50 \text{ msec.}}$$

Note

The maximum value for on or off time is 255 units or 12.75 seconds (255 X 50 msec.).

2. Connect the cables and adapters to the UEC-3 local serial port and the PC serial port. Run the Modsim program. (Refer to the the Modsim Manual for details if necessary.)

Note

Ensure that the field unit is configured for the application before proceeding. If settings stored in the EEPROM are being used, DIP switch S2-7 must be turned on when the unit is powered up.

3. Using the Modsim Manual Section 3.3.1, select the LOCAL prompt.
4. Using the Modsim Manual Section 3.3.3, establish communication with the field unit.
5. Referring to the Modsim Manual Section 4.6, use the Modbus 06 command to write the combined opening value from Step 1 to Register 225.
6. Transfer the configuration to the EEPROM by writing the value 7168 to Register 1 (Modsim Manual Section 4.6).
7. If the EEPROM is not already enabled, enable the EEPROM on the field unit by turning S2-7 on.
8. Turn the field unit power off, wait 10 seconds then turn the power back on. Wait 15 seconds for the field unit to initialize. Read the value in Register 225. Convert the hexadecimal value displayed to a decimal value and compare to the value obtained in Step 1 above. If the value does not match, repeat the procedure.

8.1.3 Changing the Closing Slow Speed

If a change in the Closing Slow Speed is required, repeat the steps in **Section 8.1.2** above except substitute 226 for the register number. Steps 2 through 4 can be omitted if the field unit is already connected to the Personal Computer and Modsim is already communicating with the field unit.

8.2 Configure ESD Override

8.2.1 ESD Override

The ESD Override feature allows a maintained ESD command to override the LOCAL and OFF positions of the selector switch. This feature is normally disabled. To enable ESD Override, the third bit of the high byte of Register 105 must be set to one. To set this bit, the contents of Register 105 must be read, decimal 1024 added to the contents, then the sum is written back into Register 105.

8.2.2 Changing the ESD Override Configuration

1. Connect the cables and adapters to the UEC-3 local serial port and the PC serial port. Run the Modsim program. (Refer to the the Modsim Manual for details if necessary.)

Note

Ensure that the field unit is configured for the application before proceeding. If settings stored in the EEPROM are being used, DIP switch S2-7 must be turned on when the unit is powered up.

2. Using the Modsim Manual Section 3.3.1, select the LOCAL prompt.
3. Using the Modsim Manual Section 3.3.3, establish communication with the field unit.
4. Using Modsim Manual Section 4.3, READ Register 105 and record the hexadecimal value.
5. Convert the value from hexadecimal to decimal and record.

6. Add 1024 (decimal) to the value found in Step 5 and record.
7. Using Modsim Manual Section 4.6, WRITE to Register 105 the value obtained in Step 6.
8. Transfer the configuration to the EEPROM by writing the value 7168 to Register 1 (Modsim Manual Section 4.6).
9. Enable the EEPROM on the field unit by turning S2-7 on.
10. Turn the field unit power off , wait 10 seconds then turn the power back on. Wait 15 seconds for the field unit to initialize, then READ Register 105 (see Step 4 above). Verify that the correct bit has been set. This can be verified by converting the contents of Register 105 from hexadecimal to binary and checking the third bit from the right. It should be a 1. If the bit has not been set, the procedure should be repeated.
11. Configure the appropriate ESD action for the application, i.e., CLOSE, OPEN etc. Refer to **Figure 6-3 or 7-3** as appropriate. The ESD function of the field unit should now be checked for proper operation.

8.3 Configure the User Digital Inputs

8.3.1 Digital Input Mask

In standard UEC-3 software, all the User Digital Inputs, except the Remote Stop input, expect normally open contacts. This section explains how to convert these inputs to expect normally closed contacts.

The inputs use Digital Input Mask A to determine the "sense" of the input. This mask can be changed to invert the sense of the inputs. The procedure given in this section covers how to do this from the Local Serial Port on the actuator.

8.3.2 Changing the Sense of the User Digital Inputs

1. Connect the cables and adapters to the UEC-3 local serial port and the PC serial port. Run the Modsim program. (Refer to the the Modsim Manual for details if necessary.)

Note

Ensure that the field unit is configured for the application before proceeding. If settings stored in the EEPROM are being used, DIP switch S2-7 must be turned on when the unit is powered up.

2. Using the Modsim Manual Section 3.3.1, select the LOCAL prompt.
3. Using the Modsim Manual Section 3.3.3, establish communication with the field unit.
4. Using Modsim Manual Section 4.3, read the low byte of Register 107 and record the contents.
5. Using the table below, total the decimal value of all the inputs that will use N.C. (normally closed) inputs (include the Remote Stop input, which by default uses an N.C contact).
6. Use this number in Equation C below and perform the calculation.
7. Using Modsim Manual Section 4.6, write the value obtained from the calculation to Register 107.

8. Transfer the configuration to the EEPROM by writing the value 7168 to Register 1 (Modsim Manual Section 4.6).
9. Enable the EEPROM in the field unit by turning S2-7 on.
10. Turn the field unit power off, wait 10 seconds then turn the power back on. Wait 15 seconds for the field unit to initialize, then read Register 107 (see Step 4 above) and compare the low byte to the original value, and the high byte to the value obtained by summing the decimal values from the chart. If both bytes do not match, restore the original configuration and repeat the procedure.

Decimal Value of Digital Input Masks Add together the decimal value of all inputs that require a N.C. input.	
UEC-3, UEC-3-MPC	**Decimal Value**
Local ESD	1
Open Inhibit	2
Close Inhibit	4
Remote Stop	8*
Remote Open	16
Remote Close	32

*By default, the Remote Stop Input uses a normally closed (N.C.) contact.

Equation C

New Value = (Decimal Sum From Chart) x 256 + Old Low Value

Example: To set the Local ESD, Open Inhibit, and Close Inhibit of a standard UEC-3 to use normally closed (NC) contacts:

New Value = (8 + 4 + 2 + 1) x 256 + 22 = 3862

8.4 Set the Jam Timer Reload Time

8.4.1 Jam Timer Reload

The jammed valve state and the jammed valve sequence are described in **Section 2.1**. The Jam Timer Reload is the number of 50 msec. intervals that the actuator is allowed to move inside the limit switch before the jammed valve sequence is initiated. The Jam Timer Reload value is stored in Register 115. The minimum (and default) value is 100 (corresponds to 5 sec.) and the maximum value is 150 (corresponds to 7.5 sec.).

8.4.2 Setting the Jam Timer Reload Time

1. Connect the cables and adapters to the UEC-3 local serial port and the PC serial port. Run the Modsim program. (Refer to the the Modsim Manual for details if necessary.)

Note

Ensure that the field unit is configured for the application before proceeding. If settings stored in the EEPROM are being used, DIP switch S2-7 must be turned on when the unit is powered up.

2. Using the Modsim Manual Section 3.3.1, select the LOCAL prompt.
3. Using the Modsim Manual Section 3.3.3, establish communication with the field unit.
4. Calculate the desired Jam Timer Reload Value by dividing the desired time (in seconds) by 0.050. This must be a number between 100 and 150.
5. Using Modsim Manual Section 4.6, write the value just calculated to Register 115.
6. Transfer the configuration to the EEPROM by writing the value 7168 to Register 1 (Modsim Manual Section 4.6).
7. If the EEPROM is not already enabled, enable the EEPROM on the field unit by turning S2-7 on.
8. Turn the power to the field unit off, wait 10 seconds then turn the power back on. Wait 15 seconds for the field unit to initialize. Using Modsim Manual Section 4.3, read Register 115. Verify that the correct value is displayed by comparing it to the value calculated in Step 4. If the value is not correct, the procedure should be repeated.

8.5 Set the Minimum/Maximum Modulating Position (UEC-3-MPC only)

8.5.1 Minimum/Maximum Modulating Position

The UEC-3-MPC controller has a minimum and maximum allowable modulating position. The default values are 2% and 98% of actuator travel. This means that a position command that is less than 2% or greater than 98% will send the UEC-3-MPC running at full speed towards the end of travel on the end closest to the command. If the default values need to be changed, they can be changed by writing new values to Register 118. These must be integer values in 1% increments. The high byte is the minimum modulating position, and the low byte is the maximum modulating position. The default value of Register 118 is 610 decimal (262 hexadecimal).

8.5.2 Changing the Minimum/Maximum Modulating Position

1. Connect the cables and adapters to the UEC-3 local serial port and the PC serial port. Run the Modsim program. (Refer to the the Modsim Manual for details if necessary.)

Note

Ensure that the field unit is configured for the application before proceeding. If settings stored in the EEPROM are being used, DIP switch S2-7 must be turned on when the unit is powered up.

2. Using the Modsim Manual Section 3.3.1, select the LOCAL prompt.

3. Using the Modsim Manual Section 3.3.3, establish communication with the field unit.
4. Calculate the new value for Register 118 using Equation D below.
5. Using Modsim Manual Section 4.6, write the value obtained from the calculation to Register 118.
6. Transfer the configuration to the EEPROM by writing the value 7168 to Register 1 (Modsim Manual Section 4.6).
7. If the EEPROM is not already enabled, enable the EEPROM on the field unit by turning S2-7 on.
8. Turn the power to the field unit off, wait 10 seconds then turn the power back on. Wait 15 seconds for the field unit to initialize. Read Register 118. Verify that the correct value is displayed by converting the displayed value from hexadecimal to decimal and compare to the value calculated in Step 4. If the value is not correct, the procedure should be repeated.

Equation D

New Value = (min. mod. position X 256) + max. mod. position

1. **Example:** To eliminate the min and max modulation positions, set the min position at 0% and the maximum to 100%. Using the equation above, you would write a value of 100 to Register 118.

New Value = (0 x 256) + 100 = 100 (64 hex)

8.6 Configure the Monitor Relay Actuation Conditions

8.6.1 Monitor Relay Actuation

The normal state of the Monitor Relay is the energized state when power is applied to the UEC-3 or the UEC-3-MPC. The default list of conditions that will cause the relay to de-energize is given in **Section 2.7** of this manual and in the table below. The bit masks that define the conditions for de-energizing this relay are contained in Registers 116 and 117, and the default values are 62304 (F360 hexadecimal) and 03 (03 hexadecimal) respectively. The bit masks and thus the conditions for de-energizing the Monitor Relay can be changed by reprogramming the contents of Registers 116 and 117. The procedure for calculating the new values and changing the bit masks are given below.

8.6.2 Configuring the Monitor Relay Bit Masks

1. Connect the cables and adapters to the UEC-3 local serial port and the PC serial port. Run the Modsim program. (Refer to the the Modsim Manual for details if necessary.)

Note

Ensure that the field unit is configured for the application before proceeding. If settings stored in the EEPROM are being used, DIP switch S2-7 must be turned on when the unit is powered up.

2. Using the Modsim Manual Section 3.3.1, select the LOCAL prompt.

3. Using the Modsim Manual Section 3.3.3, establish communication with the field unit.
4. Using the Modsim Manual Section 4.3, read Registers 116 and 117 and record the values in case there is a need to return to this configuration later.
5. Using the table below, total the decimal value of all the events in Column A which should trigger the monitor relay (de-energize the relay).
6. Using the Modsim Manual Section 4.6, write this number to Register 116.
7. Using the table below, total the decimal value of all the events in Column B which should trigger the monitor relay (de-energize the relay).
8. Using the Modsim Manual Section 4.6, write this number to Register 117.
9. Transfer the configuration to the EEPROM by writing the value 7168 to Register 1 (Modsim Manual Section 4.6).
10. If the EEPROM is not already enabled, enable the EEPROM on the field unit by turning S2-7 on.
11. Turn the power to the field unit off, wait 10 seconds then turn the power back on. Wait 15 seconds for the field unit to initialize.
12. Read and record the contents of Registers 116 and 117 (Modsim Manual Section 4.3). Verify that the correct values are in the registers by converting the displayed value of Register 116 from hexadecimal to decimal and compare to the value calculated in Step 5. Then convert the displayed value of Register 117 and compare to the value calculated in Step 7. If the values are not correct, the procedure should be repeated.

Decimal Values for Monitor Relay Masks
Add the decimal value of all events that should cause the Monitor Relay to de-energize for each Register.

Column A		Column B	
Events from Register 116	Decimal Value	Events from Register 117	Decimal Value
Opened	1	**Failure to Energize Open**	1
Closed	2	**Failure to Energize Close**	2
Stopped	4	Failure to De-energize Open	4
Opening	8	Failure to De-energize Close	8
Closing	16	Phase Loss	16
Valve Jammed	32	Phase Reversal	32
Local Mode	64	Manually Moved— Mid-travel to Open	64
Combined Fault	128	Manually Moved— Open to Mid-travel	128
Thermal OL Tripped	256	Manually Moved— Mid-travel to Close	256
Failure to De-energize	512	Manually Moved— Close to Mid-travel	512
Network A Fault	1024	Network ESD Active	1024
Network B Fault	2048	Local ESD Active	2048
Open Torque Switch	4096	Reset Since Last Poll	4096
Close Torque Switch	8192	Wrong Rotation	8192
Manual Operation	16384	Local Opening	16384
Phase Error	32768	Local Closing	32768

Note: Bold indicates the default values.

Example: Calculate the Monitor Relay Masks so that only the following conditions cause the monitor relay to de-energize:

Open torque switch
Close torque switch
Failure to energize open
Failure to energize close
Local ESD active

New Value for Register 116 = 4096 + 8192 = 12298

New Value for Register 117 = 1 + 2 + 2048 = 2051

This page is intentionally blank.

Q-Pulse Id TMS783 Active 29/01/2014 Page 68 of 134

9. Actuator Wiring Details

9.1 L120 Actuator Wiring

Contact Arrangement for Position Limit Switches

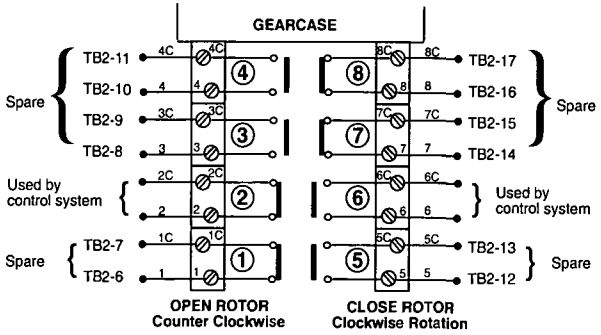

Shown with valve in fully OPEN position.

Note: Both illustrations are for a CLOCKWISE CLOSING valve.

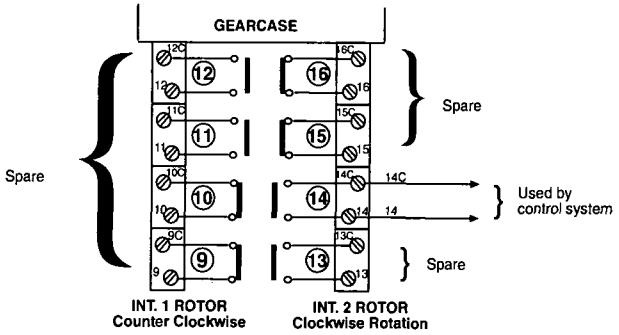

Shown with valve in fully OPEN position.

Note: Rotors INT. 1 & INT. 2 can be set at valve position FULL OPEN, FULL CLOSED or any position between.

Gear Limit Switch 14 is used to initiate the pulsing mode for slow speed

Figure 9-1: UEC-3 Limit Switch Connections for L120 Series Actuators

9.2 LY Actuator Wiring

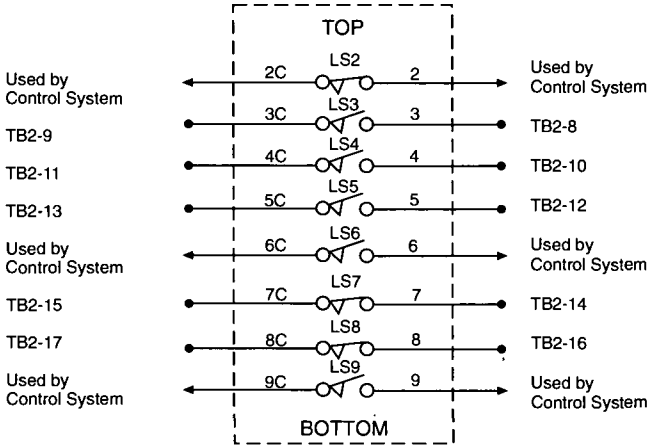

Valve shown in full open position.

Limit Switch Contact Development

LIMIT SWITCH CONTACT	Valve position (FULL OPEN – FULL CLOSE)	FUNCTION
2		OPEN LIMIT
3		SPARE
4		SPARE
5		SPARE
6		CLOSED LIMIT
7		SPARE
8		SPARE
9		TIMER

NOTES:

1. _ _ Open contact
2. ■ Close contact
3. All limit switch trip points are fully adjustable
4. Limit Switch LS1 is not fitted to LY units

Figure 9-2: UEC-3 Limit Switch Connections for LY Series Actuators

10. Troubleshooting

10.1 Troubleshooting With The Universal Diagnostic Tool (UDT):

The UDT diagnostic tool is a simple plug-in device which automatically reads the information contained in a register in the Single Board Computer. The UDT is powered from the UEC-3 module and does not require a separate battery. The front of the UDT contains 18 LEDs which, when illuminated, indicate the presence of a control, status indication or fault condition. Each LED is accompanied by a brief caption, the meaning of which is described in **Table 10-1.**

Figure 10-1: Universal Diagnostic Tool

Warning

If the actuator is installed in a hazardous area and has explosion-proof certification, then it will be necessary to comply with specific site regulations regarding the maintenance of equipment. Always follow applicable regulations and procedures when performing work in restricted environments.

10.2 Using the UDT Diagnostic Tool:

(For detailed instructions on the use of the UDT, see the UEC-3 and DDC-100 Diagnostic Interface Manual, Bulletin 437-10000.)

1. Do not isolate power from the actuator, otherwise some of the information contained in the register (memory location) in the Single Board Computer (SBC) may be lost.
2. Carefully remove the main cover of the UEC-3 control module.
3. Attach the serial interface adapter to the 34-Pin connector on the SBC.
4. Plug-in the UDT to the serial interface adapter, using the lead supplied with the tool.
5. Check that power is present at the actuator. The LED 'POWER' should be illuminated.
6. Check that the UEC-3 is functioning correctly. The LED 'RESET' should not be illuminated. A fault condition will be indicated if the LED blinks repetitively.
7. If any of the other 16 LEDs are illuminated check the meaning against the list below and take the necessary action to isolate and remedy the fault condition, if one exists.

Table 10-1: LED Caption Designations:

LED Caption	Explanation
OPEN TS -	Torque switch has tripped between the limits, in the opening direction.
CLOSE TS -	Torque switch has tripped between the limits, in the closing direction.
OPEN INH -	'OPEN' inhibit signal is present at terminal TB1-4
CLOSE INH -	'CLOSE' inhibit signal is present at terminal TB1-5
OPEN LS -	'OPEN' limit switch has tripped.
CLOSE LS -	'CLOSE' limit switch has tripped.
LOST PH -	Phase L2 has been lost (If phases LI or L3 have been lost, the UEC will not be powered .
TH OL -	Motor thermostat has tripped due to motor over heating.
ESD -	ESD signal is present at terminal TB1-3
LOCAL -	Actuator is in LOCAL or OFF mode. Not in REMOTE.
VALVE JAM -	The jammed valve signal has been initiated but has not been successful.
CLOSE CONT -	'Close' contactor has failed to operate after being signaled.
OPEN CONT -	'Open' contactor has failed to operate after being signaled.
REV PH -	The three phase supply connections are reversed.
LOCAL COMM -	No communication through the diagnostics port.
COMB -	Combination fault- only used on UEC-3-DDC. This LED will always be illuminated on UEC-3 and UEC-3-MPC since a DDC 2- wire network is not present.

10.3 UEC Troubleshooting - All Models

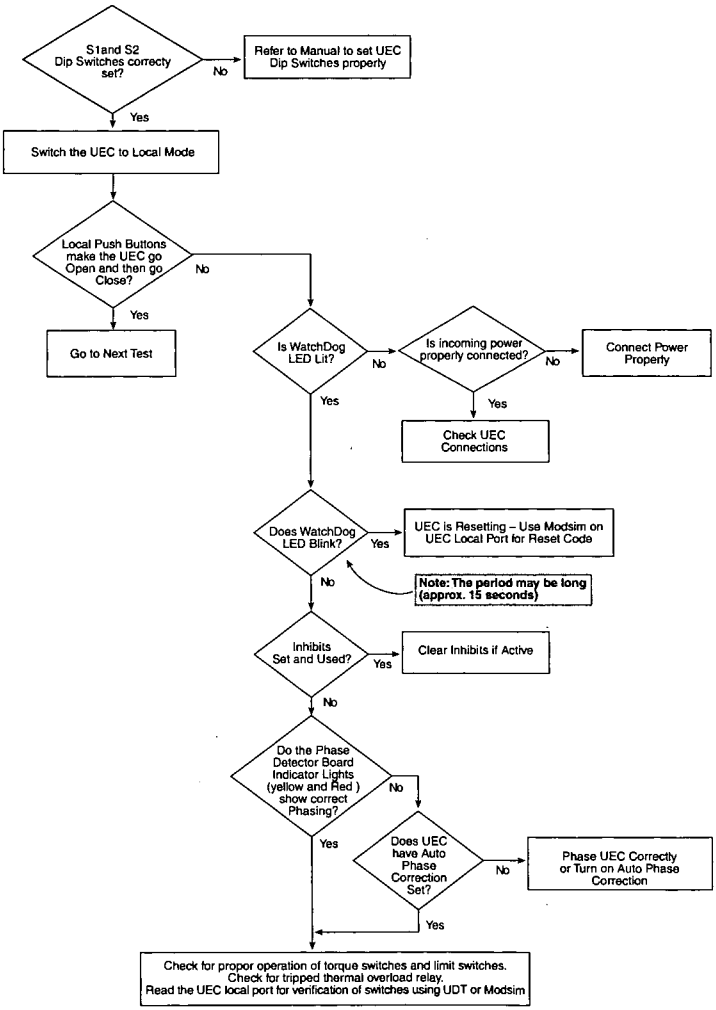

Figure 10-2: UEC Troubleshooting Flow Chart - All Models

10.4 UEC-3-MPC Troubleshooting

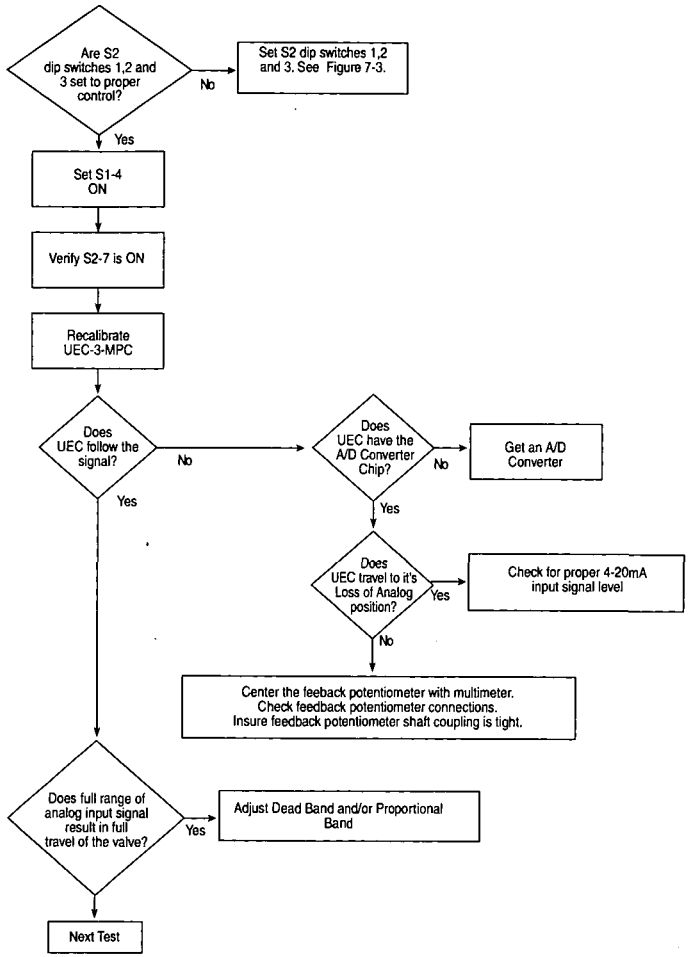

Figure 10-3: UEC-3-MPC Troubleshooting Flow Chart

Q-Pulse Id TMS783 Active 29/01/2014

10.5 Two, Three, and Four-Wire Control Troubleshooting

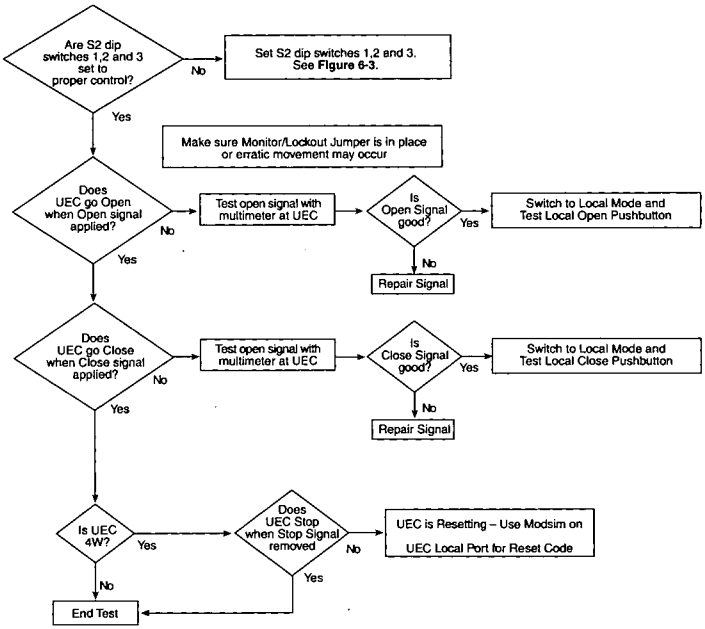

Figure 10-4: Two, Three, and Four-Wire Control Troubleshooting Flow Chart

Pulse Id TMS783 Active 29/01/2014 Page 76 of 134

11. Parts

X indicates that parts are required.
O indicates that parts are optional.

Part	Part Number	UEC-3	MPC-3-MPC
Single Board Computer	61-825-0996-4	X	X
Termination/Interconnect Board	61-825-1060-3	X	X
3 Phase Power Supply Board	61-825-0997-4	X	X
Single Phase & Special Power Supply Boards	61-825-0998-4	O	O
Primary Fuses (FS1 & FS2) - Three Phase Operation	EF4-TDC11-250MA	X	X
Primary Fuses (FS1 & FS2) - Single Phase Operation	EF2-TDC11-750MA	X	X
Control Fuse (FS3)	EF2-5X20MM-1A-250V	X	X
24VDC I/O Power Fuse (FS4)	EF2-5X20MM-1A-250V	X	X
PT 20SD	TM74-743-0066	O	O
SBC Analog Board	61-825-0962-2		X
SW93 Pushbutton Station	TM74-790-0033	X	X
Customer Service Kit	TM0700504	O	O
Universal Diagnostic Tool	61-825-0950-3	O	O
UDT Serial Interface Adapter	61-825-0951-3	O	O
ADC Chip	61-825-0733-1		X

Part Numbers are subject to change as product improvements are introduced. Consult Limitorque for current part numbers.

This page is intentionally blank.

12. Customer Service

For parts or parts information, call your local Limitorque distributor or the Parts Department in Lynchburg, VA, at 804-528-4400. For fastest response, please have the order number and serial number from the actuator available when contacting Limitorque for parts or parts information. This information can be found on a Limitorque label affixed to the main housing of the actuator.

For service information, call your local Limitorque distributor, Blue Ribbon Service Center or the Service Department in Lynchburg, VA, at 804-845-9366. For fastest service, please have the order number and serial number from the actuator available when contacting Limitorque with service questions. This information can be found on a Limitorque label affixed to the main housing of the actuator.

This page is intentionally blank.

Q Pulse Id TMS783 Active 29/01/2014 Page 80 of 134

13. Related Publications

1. DDC-100 UEC Field Unit (BITBUS)
   Installation and Operation Manual - Bulletin 440-20013

2. DDC-100 UEC Field Unit (Modbus)
   Installation and Operation Manual - Bulletin 440-20014

3. Modsim & Modbus Simulation Software
   Operation Manual - Bulletin 440-20014

4. UEC-3 and DDC-100 Diagnostic Interface Manual -
   Bulletin 437-10000

5. UEC-3 and UEC-3-MPC Installation and Commissioning
   Manual - Bulletin 440-12100.

Q-Pulse Id IMS783
Active 29/01/2014
Page 81 of 1

Notes:

Notes:

For further Limitorque service assistance call:

Limitorque Corporation
2600 East Miroloma Way
Anaheim, CA 92806
Phone (714) 630-7800
Fax (714) 630-1691

Limitorque Corporation
8501 W. 191 St.
Bldg. 5
Mokena, IL. 60448
Phone 708) 720-0017
Fax (708) 720-9468

Limitorque Corporation
7615 Boeing Drive
Greensboro, NC 27409-8347
Phone (910) 668-0871
Fax (910) 605-5310

Limitorque Corporation
8901 Jameel Road, Suite 180
Houston, TX 77040
Phone (713) 690-1960
Fax (713) 690-1277

This manual contains information that is correct to the best of Limitorque's knowledge. It is intended to be a guide and should not be considered as a sole source of technical instruction, replacing good technical judgment, since all possible situations cannot be anticipated. If there is any doubt as to exact installation, configuration, and/or use, call Limitorque Corporation, at (804) 528-4400.

Limitorque®

Limitorque Corporation
5114 Woodall Road
P.O. Box 11318
Lynchburg, VA 24506-1318
Phone (804) 528-4400
Fax (804) 845-9736

Limitorque International
Bone Lane, Newbury
Berkshire, RG145EH England
Phone 44-635-46999
Fax 44-635-36034
Telex 851-847214 LIMTRK G

Limitorque/Nippon Gear Co. Ltd.
Tennoz Central Tower, 2-2-24
Higashi-Shinagawa-Ku
Tokyo 140, Japan
Phone 03-5460-7511
Fax 03-5460-8396

Limitorque of Canada, Ltd.
2525 Dunwin Drive, Unit 1
Mississauga, Ontario L5L 1R9,
Canada
Phone (905) 820-1013/1014/1026
Fax (905) 820-5096

Limitorque India, Ltd.
E-45/2 Okhla Industrial Area,
Phase-II, New Delhi-110020, India
Phone 91-11-8276835
Fax 91-11-6839329
Telex 953-31-62921 HLID IN

Limitorque Australia Ltd.
Division of Control Engineering
(Aust.) PTY Ltd.
17 Scoresby Road
Bayswater, Victoria 3153, Australia
Phone 613-9729-0555
Fax 613-9729-8225

Limitorque Asia Pte Ltd.
75 Bukit Timah Rd.
#05-01/02 Boon Siew Building
Singapore 229833
Phone 65-332-9100
Fax 65-332-9112

© 1996 Printed in USA

Bulletin 120-11000
Issue 2/97

L120 Series Type 05 thru 40
Instruction and Maintenance Manual

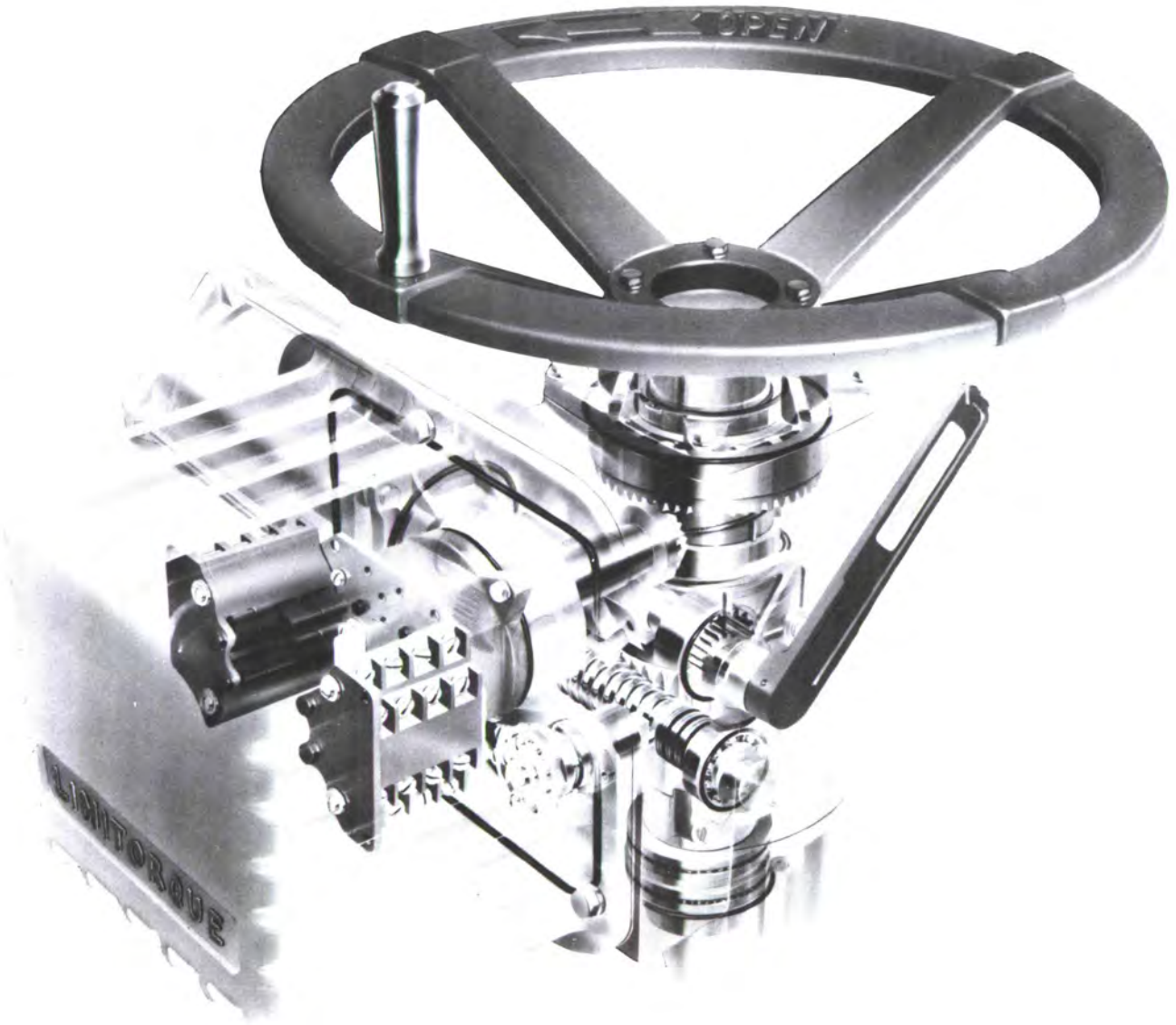

A Product of Limitorque Corporation

⚠Warning

Do not manually operate actuator with devices other than installed Handwheel and Declutch Lever. Using additive force devices (cheater bars, wheel wrenches, pipe wrenches or other devices of this nature) on the actuator Handwheel or Declutch Lever may cause serious personal injury and/or damage to the actuator or valve.

Copyright 1995, by Limitorque® Corporation
All rights reserved. No part of this manual may be reproduced or utilized for information re-sale in any form or by any means, electronic or mechanical, including photocopying, recording or by any information storage and retrieval system, without written permission from Limitorque Corporation.

Limitorque Corporation reserves the right to make changes, without notice, to this document and the products which it describes. Limitorque Corporation shall not be liable for technical or editorial errors or omission made herein; nor for incidental or consequential damages resulting from the furnishing, performance or use of this document.

Limitorque® is a registered trademark of Limitorque Corporation.

LIMITORQUE TYPE L-120 INSTRUCTION & MAINTENANCE MANUAL

Your Limitorque Valve Control...

Limitorque's L-120 series of actuators is the most advanced valve control on the market...the result of many years of development and an awareness of our customers' requirements. This booklet has been prepared to help you obtain the most benefit from the equipment. It contains instructions on the installation and maintenance of the units, plus helpful suggestions to enable you to become thoroughly familiar with the location and proper use of the operating controls.

Please before you attempt to install or operate your Limitorque Actuator — be sure to read this booklet at least once. Always keep it available for quick reference.

Limitorque actuators control the opening and closing of the valve and limit the torque and thrust applied to the valve stem. As a result, all valve operating components are protected from overload, improper seating or pipeline obstructions.

Limitorque controllers may be mounted on any size of valve in almost any position or location. Readily adaptable to existing equipment, Limitorque actuators may be powered by electricity, hydraulic pressure, air or natural gas.

Where to Find Information

PRINCIPLES OF OPERATION	2
LUBRICATION	2
INSTALLATION TIPS	3
TORQUE SWITCH	4
GEARED LIMIT SWITCH	5
POSITION INDICATION	7
DISASSEMBLY PROCEDURE	8
STEM NUT REPLACEMENT	11
REASSEMBLY	11
SIDE MOUNTED HANDWHEEL	13
ELECTRICAL START-UP	16
TYPICAL WIRING DIAGRAM	16

To obtain further information or to order parts for your Limitorque Valve control — contact your local representative or write to:

Limitorque Corporation
5114 Woodall Rd.
P.O. Box 11318
Lynchburg, Va. 24506
Attn: Manager Parts Dept.
(804) 528-4400
Fax: 804-845-9736

Note: All inquiries or orders MUST be accompanied by the following information, which can be obtained from the unit nameplate:

Unit size & type
Serial number
Limitorque Corporation order number.

PRINCIPLES OF OPERATION

Description of Motor Operation:

Your Limitorque actuator is always available for motor operation whenever the motor is energized.

DO NOT FORCE THE DECLUTCH LEVER INTO MOTOR OPERATION POSITION — THE LEVER RETURNS TO THIS POSITION AUTOMATICALLY WHEN THE MOTOR IS ENERGIZED.

(Refer to page 8)

In motor operation, the motor gear set (#'s 35 & 38) drives the wormshaft (#15) and worm gear (#21) which in turn rotates the clutch sleeve (#19) by means of driving lugs. The clutch sleeve and worm gear may be assembled to produce either a 'no lost motion' or 'hammerblow' effect. The drive sleeve (#25) is keyed to the clutch sleeve and, hence, rotates producing the required ouput rotary motion.

Description of Manual Operation:

Counterclockwise rotation of the declutch lever (#9) causes the declutch actuator to lift the clutch sleeve out of engagement with the worm gear. Drive lugs on top of the clutch sleeve engage matching lugs in the handwheel adapter (#26) and, then, latches engage the clutch sleeve in this position. The actuator is now in the handwheel drive option. Energizing the motor at this point will cause the latches to drop out and the spring loaded clutch sleeve re-engages with the lugs on the worm gear. The actuator is once more in motor operation. PLEASE NOTE THAT THE SHIFT FROM MANUAL TO MOTOR OPERATION IS AUTOMATIC AND DOES NOT REQUIRE EXTERNAL POSITIONING OF THE DECLUTCH SHAFT.

Torque and Travel Limiting:

The geared limit switch is driven by a bevel gear connected to the upper drive lugs of the clutch sleeve. Thus the limit switch is directly connected to the output of the actuator and, once properly set, remains in step with the valve position regardless of electric or manual operation of the Limitorque actuator.

The worm and wormshaft are supported in two rotating spring packs. As torque is generated by the actuator, the worm moves axially against one of the spring packs. Each pack is pre-calibrated and, hence, a finite compression represents a finite torque output. Movement of the worm operates the torque switch which interrupts the power to the motor. The torque switch is adjustable and can be set to operate at pre-determined torque levels.

LUBRICATION

Lubrication Inspection

Note:

Before operating your actuator, inspect it for proper lubrication, (especially if it has been stored for a long period of time).

Limitorque actuators are designed with a totally sealed gear case factory-packed with grease. The gear case can be mounted in any position (all penetrations into it are sealed); however, those mounting positions which would cause vulnerable areas of the operator (e.g., motor, or switch compartment) to be saturated with lubricant should a seal failure occur, should be avoided if possible and are not recommended.

No seal can remain absolutely tight at all times; therefore, it is not unusual to find a very small amount of weeping around shaft seals – especially during long periods of idleness such as storage. Using grease minimizes this condition as much as possible. If you find a small amount of weeping at start-up, remove it with a clean rag. Once the equipment is operating, the weeping should stop.

Lubrication Frequency

Base the frequency of lubrication inspections on historical data of your installed equipment. Every actuator application has its own effect on lubricants. Pattern lubricant inspections based on the needs of your facility and its applications. The following schedule of lubrication inspection should be followed until operating experience indicates otherwise.

Gear Case: Inspect lubrication every 18 months or 500 cycles – whichever occurs first.

Inspection

The three primary considerations in a lubrication inspection are:

1. **Quantity** - L120 operators are built to operate on the immersion principle. The primary concern in the amount of lubricant is whether the "worm" is totally immersed in grease.

2. **Quality** - If dirt, water or other foreign matter are found during lubrication inspection, the units should be flushed with a commercial degreaser/cleaner such as Exxon Varsol #18 which is not corrosive and does not affect seal materials. Repack unit with fresh lubricant allowing room for grease thermal expansion.

3. **Consistency** - Lubricant should be slightly fluid approximating a standard NLGI-0 grade consistency or less. Thinners such as Amoco WAYTAC #31 oil may be added provided the volume of thinner does not exceed 20% of the total lubricant.

Factory Lubricants

Gear Case:

Nebula EP-0 calcium complex base grease, suitable for temperatures from -20°F (-29°C) to +175°F (+79°C).

L120 with 3600 and 1900 RPM motor is factory lubricated with Exxon Nebula EP-00 calcium complex base grease, suitable for temperatures from -60°F to + 250°F.

Geared Limit Switch:

Exxon Beacon 325 (no substitute).

Limitorque Minimum Lubricant Qualities Required

⚠ Caution

Do not mix lubricants of a different base chemical. Mixing lubricant bases may cause lubricant properties to be ineffective.

The standard lubricants used by Limitorque have been proven extremely reliable over years of service. We do not recommend a particular lubricant substitute for our standard lubricants, but below is a list of minimum lubricant qualities required by Limitorque:

1) Should contain an "EP" additive.
2) Must be suitable for the temperature range intended.
3) Must be water and heat resistant and non-separating.
4) Must not create more than 8% swell in Buna N or Viton.
5) Must not contain any grit, abrasive or fillers.
6) Must slump–prefer NLGI grade .
7) Must not be corrosive to steel gears, ball or roller bearings.
8) Dropping point must be above 316°F (158°C) for temperature ranges of -20°F (-29°C) to 150°F (+66°C).

Approximate Lubricant Weights

Unit Size	lbs.	kg
L120-05	3.3	1.5
L120-10	3.3	1.5
L120-20	6.1	2.8
L120-40	8.1	3.7

INSTALLATION TIPS

CAUTION: Do not attempt to store, install or operate your Limitorque Valve Control without reading the instructions and cautionary notes below.

CAUTION: Do not remove the unit mounting bolts when the unit is mounted on a rising stem valve unless the valve is in the fully open position, or there is not, nor cannot be, any pressure in the line.

NOTE: Limit switches are not factory set by Limitorque. They must be set when the unit is installed on the valve.

Short Term Storage (less than one year).

Units are not fully weatherproof until properly installed on the valve or prepared for storage.

Units should be stored in a clean, dry, protected warehouse free from excessive vibration and rapid temperature changes. If the units must be stored outside, they must be stored off the ground, high enough to prevent their being immersed in water or buried by snow.

Connect the internal heaters (if supplied) or place desiccant in the switch compartment. Replace all plastic caps or plugs with pipe plugs and ensure that all covers are tight. If the unit is mounted on a valve and the stem protrudes from unit, a suitable stem cover must be provided.

Unit should be stored with the motor and switch compartment horizontal.

FAILURE TO COMPLY WITH THESE RECOMMENDED STORAGE PROCEDURES WILL VOID THE WARRANTY. FOR LONGER TERM STORAGE PLEASE CONSULT LIMITORQUE FOR PROCEDURES AND RECOMMENDATIONS.

DO:

1. Mount motors on a horizontal plane, if possible.
2. Keep the switch compartment clean and dry.
3. Operate the unit by handwheel only, when initially setting the limit switches.
4. Check all unit wiring to ensure that it coincides with the applicable wiring diagram.
5. Carefully check for correct motor rotation direction. If the motor is driving the valve in the wrong direction, interchange any two leads on three phase motors or switch the armature leads on D.C. and single phase motors.
6. Use protective stem cover. Check valve stem travel and clearance before mounting covers on rising stem valves.
7. Replace all molded plastic conduit and top protectors (installed for shipping purposes only) with pipe plugs when installation wiring is complete.
8. Set up periodic operating schedule for infrequently used valves.
9. Keep the valve stem clean and lubricated.
10. Reset the travel limit switches prior to motor operation if the unit has been dismantled or removed from the valve.

CAUTION: Shut off incoming power before opening switch compartment.

DO NOT:

1. **CAUTION: Do not attempt to work on your Limitorque actuator without first shutting off incoming power.**
2. Do not attempt to work on your Limitorque actuator while it is mounted on a torque seated valve.
3. Do not motor operate the valve without first setting or checking the limit switch setting and motor rotation direction.
4. Do not force the declutch lever into motor operation. **LEVER WILL AUTOMATICALLY RETURN TO MOTOR OPERATION WHEN MOTOR IS ENERGIZED.**
5. Do not force the declutch lever into hand operation. If the clutch does not easily engage, rotate handwheel slowly while operating the declutch lever.
6. Do not use a cheater on the handwheel.
7. Do not use abrasive cloth to clean the contacts on the limit and torque switches.
8. Do not torque seat 90° operation valves nor run them against the stops as this may cause damage to the valve.
9. Do not alternately start/stop the motor to open or close a valve which is too tight for normal operation.
10. Do not reset torque switch to a setting higher than the recommend factory maximum.
11. Do not attempt to repair gearing in the limit switch. Replace entire gear frame assembly if necessary.

TORQUE SWITCH

⚠CAUTION

Disconnect all incoming power before opening limit switch compartment or working on the torque switch.

NOTE

If unit has "torqued out", release torque buildup by operating the unit manually.

The torque switch is designed to protect the actuator in open and close directions. The switch was set at the factory according to information regarding necessary torque or thrust output that was provided at the time of order. A torque switch calibration tag was supplied with the unit.

⚠CAUTION

A maximum stop setting plate is provided on most units. Do not remove this plate. Do not exceed the setting indicated by this limiter plate without contacting Limitorque.

Torque Switch Setting Procedure

Before adjusting or installing a torque switch, place the L120 unit in manual mode and release the load on the wormshaft spring pack.

⚠CAUTION

Installing or adjusting the torque switch with the operator in a loaded condition will result in a loss of torque protection.

Should the present switch setting require changing, proceed as follows:

1. For both open or close direction, loosen screw (A) and move pointer (B) to desired position. A higher number indicates a high torque and/or thrust output.
2. Tighten screw (A).
3. Operate the valve electrically to seat valve and to ensure tight shut-off.

L120-11000
Sheet 4 of 16

Balancing Procedure

If the torque switch has been removed from the unit or if a new torque switch is being installed, the torque switch must be rebalanced using the following procedure:

1. Ensure that the unit is in manual mode and the load is removed from the wormshaft spring pack.
2. Prior to reinstalling the torque switch, note the open and close torque switch settings.
3. Loosen screws (A) and position both pointers (B) at the #1 setting, tighten screw (A). In this position the index marks should be aligned.
4. Loosen balancing screws and install the torque switch. When properly installed, the base of the torque switch is flush against the compartment and the hole for the mounting screw is aligned. Install the mounting screw.
5. Tighten the balancing screws. The switch is now balanced and ready for the pointers to be returned to their original settings.

⚠CAUTION

The balancing screws should not be touched except during the balancing procedure.

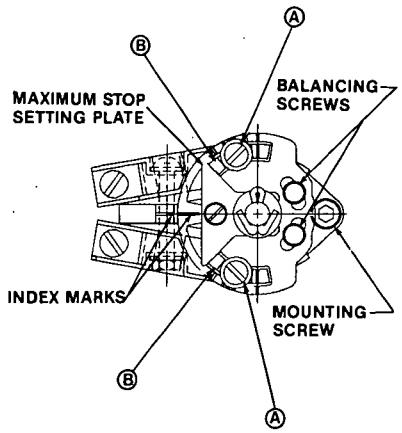

600 Volt Torque Switch

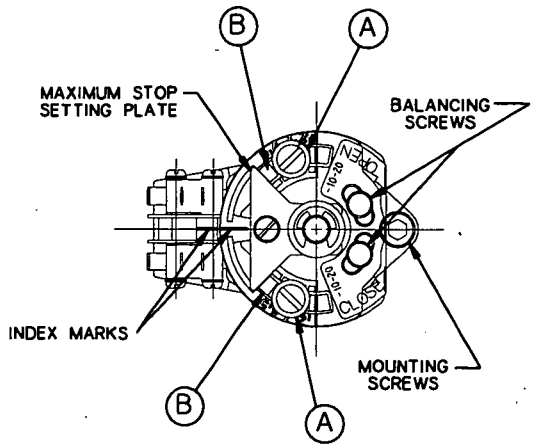

Micro-Switch Style Torque Switch

GEARED LIMIT SWITCH

⚠CAUTION

The geared limit switch is not pre-set at the factory and must be adjusted after the actuator has been mounted on its associated equipment.

Disconnect all incoming power to the unit prior to opening the limit switch compartment and adjusting the switch.

Consult the relevant wiring diagram for limit switch contact development. All L120 units are supplied with 16 contact limit switches - 4 switches on each of 4 rotors. Two rotors are used for end of travel indication. The remaining two rotors may be adjusted for any intermediate point of travel.

Limit Switch Setting Procedure

⚠Danger

Potential Explosion Hazard. Do not use a variable speed electric drill for setting the Limit Switch in an explosive environment.

⚠Caution

When setting Limit Switch Rotor Segments (Cams) using a variable speed electric drill, Do Not run drill at speeds higher than 200 RPM. Operating drill at high speeds can cause damage to gearing within the Limit Switch

Note

The standard 16 contact, 4 gear, Limit Switch is capable of counting up to 740 drive sleeve turns depending on actuator unit size. The Intermediate Shaft (B) may take a considerable number of turns before rotor trip occurs.

1. Open compartment cover (#200).
2. Put the actuator into manual operation and use the handwheel to operate the valve in the "open" direction. While operating the valve, note the direction of the intermediate shaft (B) corresponding to the rotor or rotors to be set.
3. When the valve is fully open, close it one turn of the handwheel to allow for coast of moving parts.
4. Push in setting rod (A) and turn one quarter turn. The rod will latch in this depressed position.
5. Refer to the applicable wiring diagram for contact development. The limit switch contact is closed when the rotor is engaged with the plunger. If the rotor to be set has not turned 90 degrees to operate the plunger, turn the intermediate shaft in the same direction as noted in step "2" until the rotor clearly trips the switches. This rotor is now set correctly.

   If the rotor has already tripped, turn intermediate shaft (B) in the direction opposite the that noted in step "2" until the rotor trips. Immediately reverse direction until the rotor clearly trips again. This rotor is now correctly set.

   If the intermediate position rotor is also to be set at the end of travel position, repeat the setting operation as above.

6. Before moving the valve, depress and turn the setting rod (A) one quarter turn to the spring released position. Insert a screwdriver into the intermediate shafts to ensure that they will not move.

⚠ CAUTION:

Do not operate the valve when the setting rod (A) is in fully depressed position, loss of the contact setting will occur and the setting rod will be damaged.

7. Operate the valve by handwheel to the fully "close" position, reverse direction by one turn of the handwheel to allow for coast of moving parts.
8. Set the other rotors by following steps "1" through "6".

The rotor segments can be separated and rotated through 90 degrees to give various combinations of normally open or normally closed contacts for each rotor:

Proceed as follows:

1. Remove nuts (8) and fillet head machine screws (5) (total 2 fasteners on each side of the switch).
2. Complete contact assembly can now be removed from the back plate.
3. Cams can now be rearranged on the camshaft to produce the required combination of contacts.
4. Replace contact assembly on back-plate (ensuring that the registers fit correctly) and secure with machine screw and nuts.

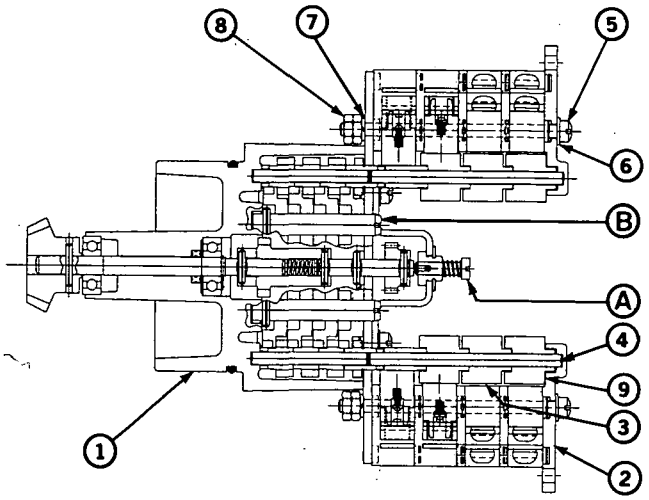

Limit Switch

Parts List

PC. NO.	QTY.	DESCRIPTION
1	1	GEAR FRAME ASSEMBLY
2	2	8 SWITCH CONTACT BLOCK ASSY.
3	12	ROTOR SEGMENTS (SHORT)
4	4	ROTOR SHAFT
5	4	MACHINE SCREW
6	4	FLAT WASHER
7	4	LOCK WASHER
8	8	HEX NUT
9	4	ROTOR SEGMENTS (LONG)

L120-11000
Sheet 6 of 16

POSITION INDICATION

Local:

1. The local dial position indicator is factory selected to show valve position but can only be adjusted when mounted on the valve.
2. Disconnect all incoming power and remove Switch Compartment Cover, (#200).
3. Place valve in the fully closed position.
4. Loosen the round head machine screw which holds the pointer in place, move the pointer to the "O" position, and retighten the screw. The indicator is now set.

NOTE: 'Flip-flop' type indicators are activated by the end-of-travel rotors of the geared limit switch. This type of indicator will require no further setting after the geared limit switch has been adjusted.

NOTE: For assemblies supplied for remote indication, the Driving Pinion, has been shipped loose in a bag, to protect the potentiometer from being damaged by accidental rotation of the handwheel prior to installation and setting on the valve.

Remote:

CAUTION: Typical voltmeter remote indicators furnished by Limitorque are built to accept a maximum of 10 volts. It is necessary to adjust using a separate test voltmeter with a scale suitable for the maximum incoming control voltage.

1. Mount the adjustable resistor furnished as near as possible to the voltmeter indicator.
2. WITH POWER OFF, connect all wires as shown below **except** the two on the voltmeter indicator. Connect these two to the test meter.
3. Move the slider of the adjustable resistor to the extreme opposite end of the resistor from the power connection.
4. Disconnect all incoming power and remove Switch Compartment Cover, (#200). Set screw in small gear which drives the transmitter (potentiometer) should already be loose. If it is not, loosen set screw so gear will not drive the transmitter.
5. Place the valve in the fully closed position. While valve is moving toward closed, note which direction the small shaft and gear **would** be driving the wiper arm on the transmitter.
6. When valve is closed, move the wiper arm on the transmitter to the end of the transmitter coil corresponding to the close position, and tighten set screw on gear.
7. Turn power on. The test meter should now read "O" or almost "O".
8. Place the valve in the full open position.
9. Move the adjustable resistor slider toward the power connected end until the test meter reads 10 volts.
10. Turn power off, disconnect the test meter, and connect leads to the voltmeter indicator.
11. Turn power on. Indicator should now read full open.
12. Final adjustment may be necessary. If the indicator reads less than full open, **carefully** move the adjustable resistor slider ahead being careful not to exceed the full open position on the dial. If the indicator reads more than "O" when the valve is closed, repeat the setting procedure starting with Step 6.
13. When the indicator properly shows valve position, lock the adjustable resistor slider in place.

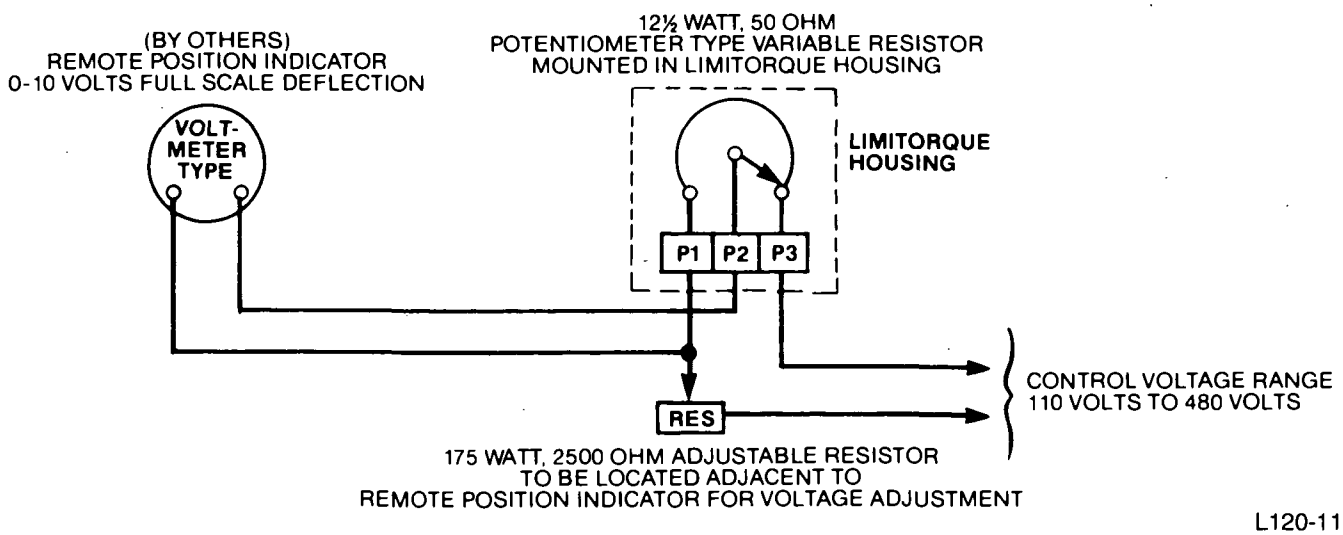

L120-11000
Sheet 7 of 16

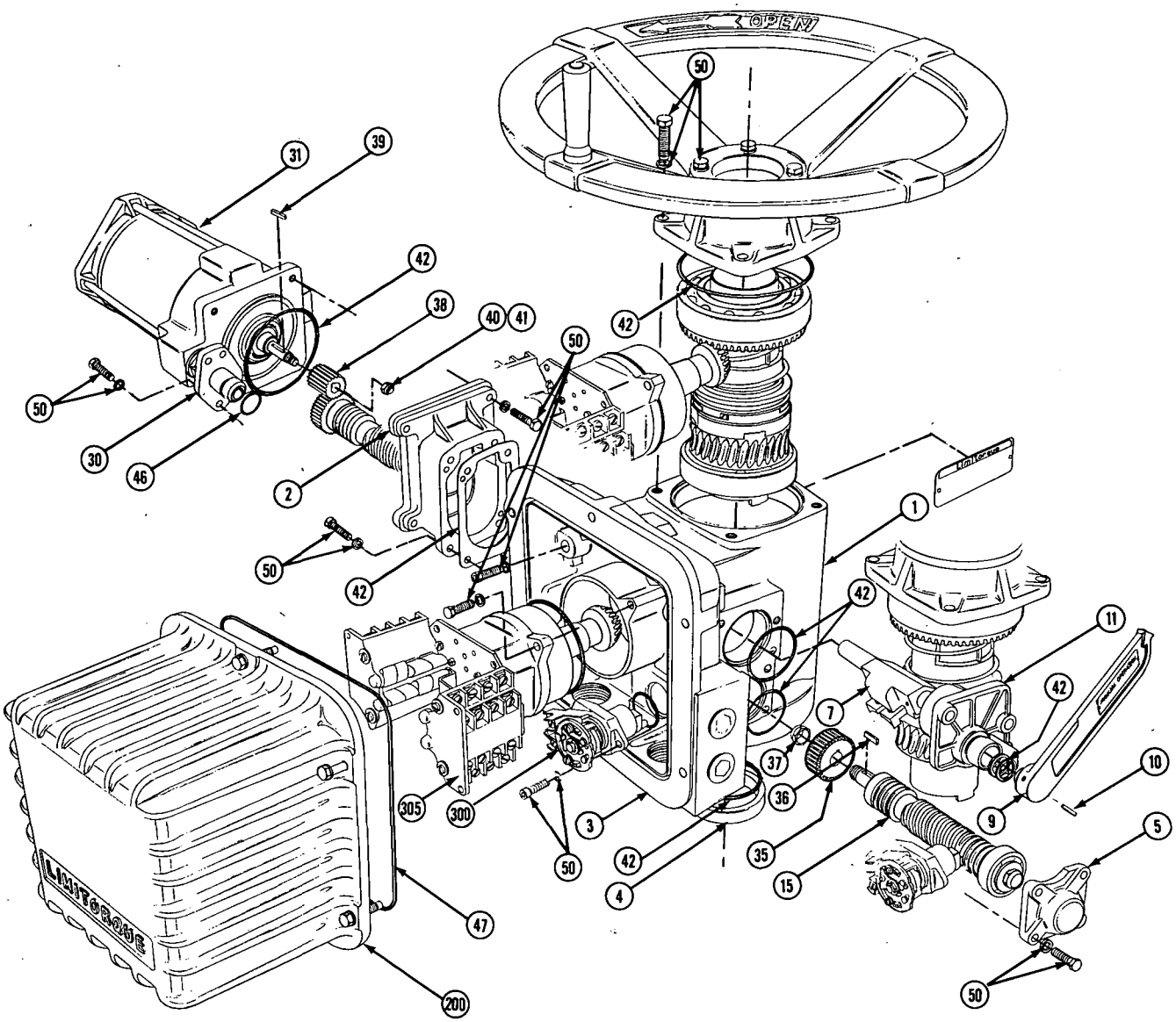

PARTS LIST		
PC. NO.	QTY.	DESCRIPTION
1	1	HOUSING
2	1	MOTOR ADAPTER
3	1	ELECTRICAL COMPARTMENT
4	1	SEAL RETAINER
5	1	WORM SHAFT END CAP
6	1**	HSG. COVER SHIM SET
7	1	DECLUTCH SHAFT ASSY.
9	1	DECLUTCH LEVER
10	1	ROLL PIN
11	1	DECLUTCH CAP
15	1	WORM SHAFT ASSEMBLY
30	1	NIPPLE FLANGE
31	1	MOTOR
32	4**	DOWELS
35	1	WORM SHAFT GEAR

PC. NO.	QTY.	DESCRIPTION
36	1	KEY
37	1	FLEXLOC NUT
38	1	MOTOR PINION
39	1	KEY
40	1	STOP NUT
41	1*	WASHER
42	1	SEALS KIT
46	1	O-RING
47	1	O-RING
50	1	HARDWARE KIT
200	1	COMPARTMENT COVER
300	1	TORQUE SWITCH
305	1	GEARED LIMIT SWITCH

*L120-40 Only
**Not Shown

L120-11000
Sheet 8 of 16

DISASSEMBLY PROCEDURE

CAUTION: Do not attempt to perform service on the Limitorque actuator unless all power services have been shut off. Minor work, such as replacing geared limit switch, torque switch or motor, may be readily performed while the actuator is still on the valve. For more complex work, it is suggested that the actuator be removed from the valve.

If the actuator Is fitted with a thrust base (#100), it is possible to remove the actuator housing while leaving the base on the valve to accept valve thrust. However, it is preferred that the valve be isolated from service and, if it is a rising stem, that the valve be fully open.

To disassemble the L120-05, 10, 20 and 40 units, proceed as follows:

1. Shut off all power to the unit.
2. Remove electrical compartment cover (#200). (note: fastening screws are captive in cover).
3. Disconnect all electrical leads from the torque switch (#300) and geared limit switch (#305). Ensure that all leads and terminals are clearly marked to facilitate re-assembly.
4. Remove two screws holding limit switch and one holding torque switch. Remove both items.
5. Remove four bolts holding motor (#31) and three bolts holding conduit nipple flange (#30). Remove motor, drawing motor leads through from switch compartment.
6. Motor pinion (#38) may be replaced by removing flex loc nut (#40).
7. Remove worm shaft cap (#5) and draw complete wormshaft assembly from housing. Note: The wormshaft has been assembled at the factory to obtain the correct pre-load on the spring packs. Do not attempt to disassemble further. If the worm is worn or damaged, it is suggested that the complete wormshaft subassembly be replaced.
8. Remove declutch cap (#11).
9. For **L120-05 and 10** size, the complete declutch assembly (#7) may now be drawn from housing.

   For **L120-20 and 40** sizes, remove declutch input pinion (#12) followed by declutch assembly (#7).
10. Remove handwheel and housing cover (#27) and lift complete drive sleeve subassembly from housing.

Drive Sleeve & Housing Cover Disassembly

1. Remove upper bearing (#17), bevel gear (#18), declutch spring (#24), and clutch sleeve (#19).
2. Remove lower bearing (#16).
3. Spirolox retainer (#22) may now be removed by inserting small flat blade screwdriver under the end of the ring and prying the first layer from the groove. Continue around the ring until it is free from the groove.
4. Remove wormgear (#21) and lug ring (#20).
5. Handwheel adapter (#26) and Seal (#42) can be removed from housing cover (#27) by removing retaining ring (#28).

PARTS LIST		
PC. NO.	QTY.	DESCRIPTION
16	1	BALL BEARING
17	1	BALL BEARING
18	1	DRIVE SLEEVE BEVEL GEAR
19	1	H.W. CLUTCH SLEEVE
20	1	WORM GEAR LUG RING
21	1	WORM GEAR
22	1	RETAINING RING
23	1	KEY
24	1	DECLUTCH SPRING
25	1	DRIVE SLEEVE
26	1	HANDWHEEL ADAPTER
27	1	HOUSING COVER
28	1	RETAINING RING
29	1	HANDWHEEL
33	1*	HANDWHEEL COVER PLATE
34	1*	H.W. COVER PLATE GASKET
42	1	SEAL KIT
43	1	QUAD RING
44	1	QUAD RING
50	AR	HARDWARE

* Not shown

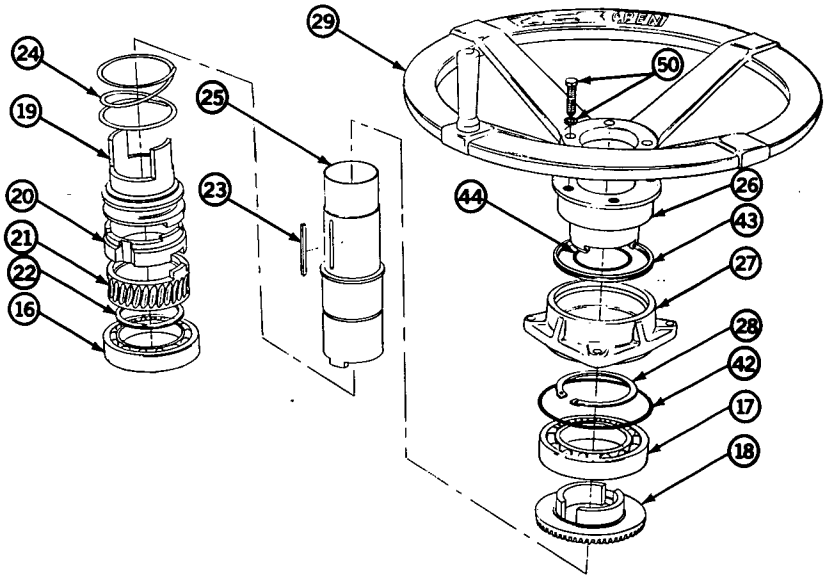

Thrust Base Disassembly

1. If thrust base option is present (#100), remove seal retainer (#102) followed by stem nut (#101) and thrust bearings (#'s 103, 104 and 105).
2. Remove four bolts (#110) and lift thrust base from main housing.

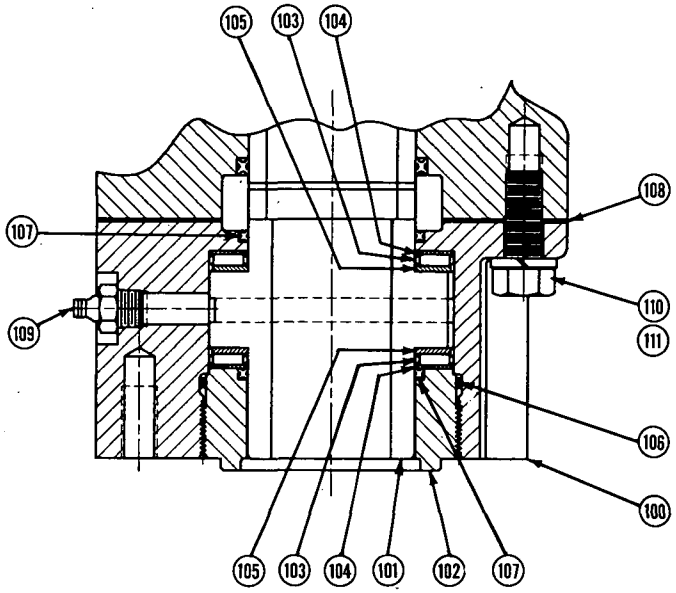

PARTS LIST		
PC. NO.	QTY.	DESCRIPTION
100	1	BASE HOUSING
101	1	STEM NUT
102	1	SEAL RETAINER
103	2	NEEDLE BEARING
104	2	THRUST WASHER
105	2	THRUST WASHER
106	1	O-RING SEAL
107	2	QUAD RING SEAL
108	1	GASKET
109	1	GREASE FITTING
110	4	HEX HD CAP SCREW
111	4	LOCK WASHER

Torque Nut Disassembly

The L120 Series actuator can be supplied without the thrust base option for applications requiring torque only. The torque nut is driven by the drive sleeve lugs and held in place by the torque bushing connector.

Standard Drive Sleeve:

To remove the torque nut (#95), remove retaining ring (#183) and drop the torque nut out the bottom of the drive sleeve (#25).

Optional Drive Sleeve:

1. Remove the handwheel (#29), handwheel cover plate (#33) and gasket (#34) to provide access to the elastic stop nut (#99).
2. Remove the elastic stop nut (#99) from the rod (#1). The torque nut (#95) can now be removed from the bottom of the drive sleeve (#25).
3. The torque bushing connector (#96) can be removed from the torque nut by removing the retaining ring (#98).

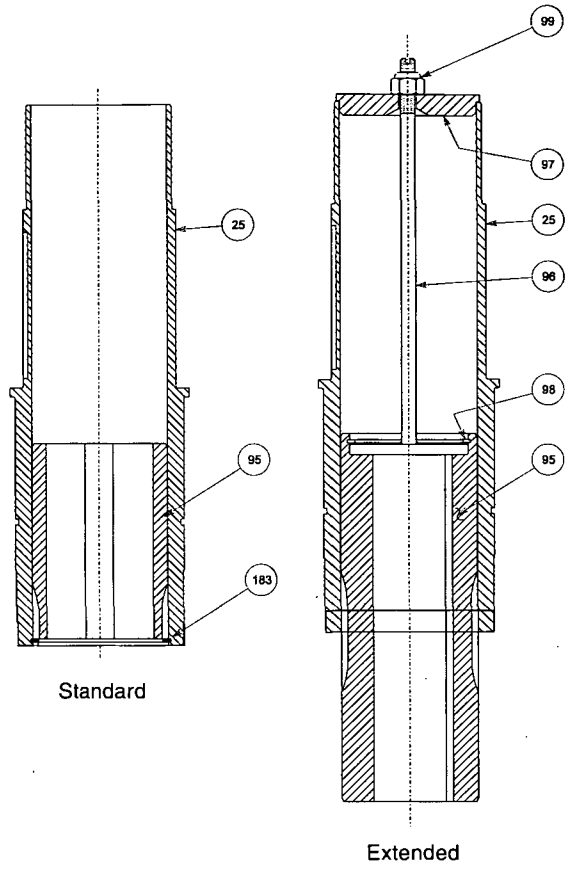

Standard & Extended Drive Sleeve Assembly (Ref. dwg. 01-602-0382-3-B)

Parts List for Extended & Optional Drive Sleeve		
PC. NO.	QTY.	DESCRIPTION
183	1	RETAINING RING
99	1	ELASTIC STOP NUT
97	1	TORQUE BUSH. WASHER
96	1	TORQ. BUSHING CONN.
98	1	RETAINING RING
95	1	TORQUE NUT
25	1	DRIVE SLEEVE

L120-11000
Sheet 10 of 16

STEM NUT REPLACEMENT

This section is applicable only to thrust base applications. Occasionally the stem nut of the operator may need replacing if used in a threaded stem application on rising stem valves.

⚠Warning:

Possible Hazardous Voltage. Turn power OFF before disassembling or removing the L120 from the mounting base. This will prevent accidental start-up during service to unit.

⚠Warning:

Potential high pressure vessel. Before removing or disassembling your actuator, insure that the valve or other actuated device is isolated and is not under pressure.

Use the following procedure to replace stem nut:

1. Disconnect all incoming power to the unit.
2. Remove actuator from valve.
3. Remove seal retainer (#102) followed by stem nut, bearings and seals.
4. Check the fit of the new stem nut on the valve stem — ensure that the nut travels freely without binding.
5. Reassemble the thrust base and remount the actuator on the valve.
6. Remount actuator on thrust base.
7. Removing the actuator from the valve will change the limit switch settings. Refer to the Geared Limit Switch section of this manual to reset the limit switches.
8. Reconnect power and test for correct functioning.

REASSEMBLY

(Refer to illustrations on pages 8, 9, and 12)

1. Install lug ring (#20) onto drive sleeve (#25) followed by worm-gear (#21). Ensure that worm-gear lugs engage with recesses on lug ring.
2. Install Spirolox retainer (separate layers of retainer sufficiently to begin threading the retainer into the drive sleeve groove. Continue threading until the retainer is firmly located in the groove).
3. Now install key (#23) and clutch sleeve (#19).
4. Complete the assembly, by adding the declutch spring (#24), bevel gear (#18), upper bearing (#17), and lower bearing (#16).
5. Replace drive sleeve assembly into main housing, secure with the housing cover (#27). Ensure that all seals are in place.
6. Insert wormshaft assembly (#15) into the housing and locate the bearings in the housing journals. Replace the wormshaft cap (#5).
7. Install the wormshaft gear (#35) and flex loc nut (#37).

Note:

The flexloc nut may be reused a limited number of times. It is recommended that a new nut be used during reassembly.

8. Declutch Assembly:

Size L120-05 and 10:

Install declutch cap (#11) on declutch shaft (#7), ensure that the return spring is located correctly in the endcap. Replace declutch lever (#9) on the shaft with the lever against the stop. While holding the cap steady rotate the declutch shaft against the spring tension until the holes in the shaft and lever align. (Insert roll-pin (#10).

Replace complete assembly in main housing. Ensure that declutch actuator (#7-1) declutch latches (#7-2 & #7-3) fit into the groove on the declutch sleeve (#19). Secure declutch cap.

Note:

When the declutch lever is disengaged against the declutch stop (motor operation position), the declutch actuator (#7-1) should not be in contact with the groove on the handwheel clutch sleeve (#19) (see illustration on page 9 and 12).

Size L-120-20 and 40:

Install declutch cap (#11) on the declutch pinion shaft (#12), ensuring that the return spring is correctly located in slots. Install declutch lever (#9) on the pinion and against the stop. While holding the cap steady, rotate the pinion shaft (#12) against the spring tension until the holes in the lever (#9) and shaft align. Insert roll pin (#10). Slide declutch shaft (#7) into the housing, ensuring that declutch shaft assembly (#7) fits correctly in the groove in the handwheel clutch sleeve (#19).

Install declutch cap assembly into housing, finding the nearest tooth on the internal spur gear which will allow the cap to be secured without placing tension on the declutch actuator (#7-1) (causing it to rub against the groove in the handwheel declutch sleeve (#19)).

(Continued)

9. Install torque and limit switches into switch compartment housing.

> **Note:**
>
> The limit switch must be reset before the actuator is placed back into service.

10. Install motor pinion (#38) and elastic stop nut (#40) onto motor shaft.

> **Note:**
>
> The elastic stop nut may be reused a limited number of times. It is recommended that a new nut be used during reassembly.

11. Install motor using the following procedure: Install conduit nipple flange (#30) and seal (#42) onto conduit nipple in the flange and secure motor. Finally, secure the nipple flange.
12. Connect all electrical leads in switch compartment and complete assembly by replacing the compartment cover, handwheel adapter, handwheel and thrust base if applicable.

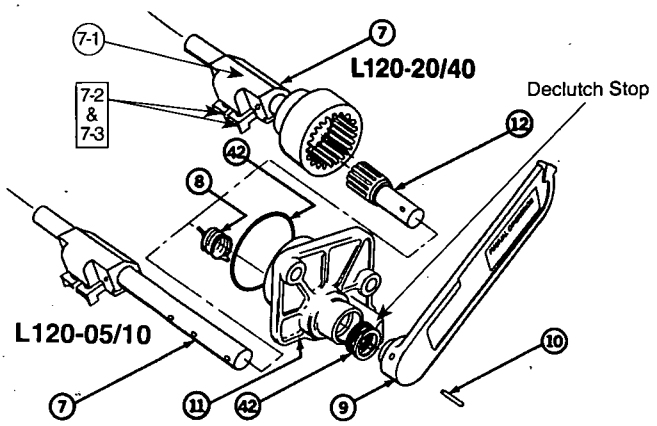

Parts List		
PC. NO.	QTY.	DESCRIPTION
7	1	DECLUTCH SHAFT ASSY.
7-1	1	DECLUTCH ACTUATOR
7-2	1	DECLUTCH LATCH (LEFT & RIGHT)
8	1	DECLUTCH RETURN SPRING
9	1	DECLUTCH LEVER
10	1	ROLL PIN
11	1	DECLUTCH CAP
12	1*	DECLUTCH INPUT PINION
42	1	SEAL
*L120-20/40 ONLY		

OPTIONAL SIDE-MOUNTED HANDWHEEL

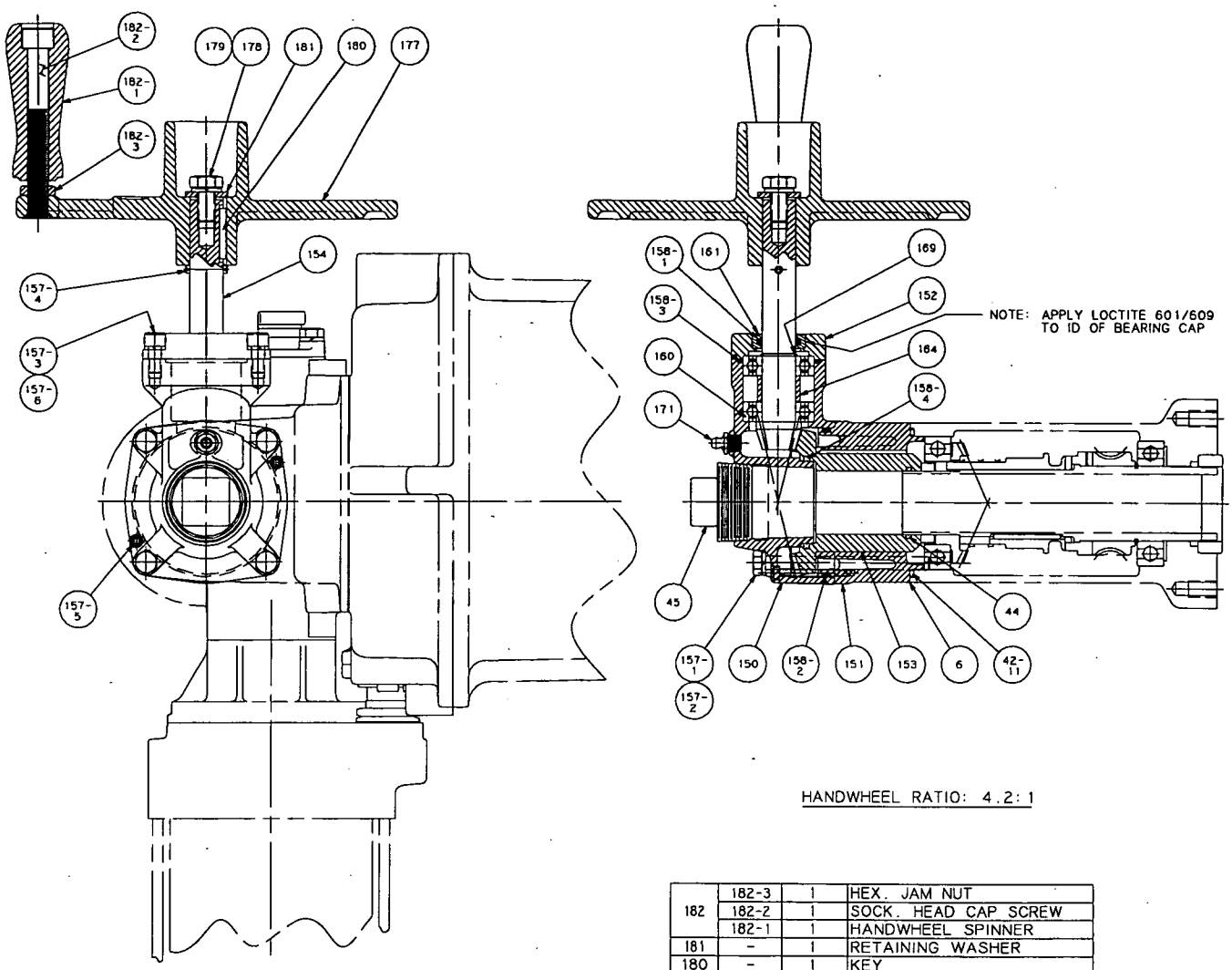

HANDWHEEL RATIO: 4.2:1

L120-05 and 10

PC. NO.	SUB PC. NO.	L120-10 QTY.	NAME
182	182-3	1	HEX. JAM NUT
	182-2	1	SOCK. HEAD CAP SCREW
	182-1	1	HANDWHEEL SPINNER
181	-	1	RETAINING WASHER
180	-	1	KEY
179	-	1	LOCKWASHER
178	-	1	HEX. HEAD CAP SCREW
177	-	1	HANDWHEEL
171	-	1	GREASE FITTING
169	-	1	RETAINING RING
164	-	1	SPACER
161	-	1	SEAL INSERT
160	-	2	BALL BEARING
158	158-4	1	QUAD-RING
	158-3	1	'O'-RING
	158-2	1	'O'-RING
	158-1	1	QUAD RING
157	157-6	2	LOCKWASHER
	157-5	2	SOCKET HEAD CAP SCREW
	157-4	1	ROLL PIN
	157-3	2	SOC HEAD CAP SCREW
	157-2	4	LOCKWASHER
	157-1	4	HEX HEAD CAP SCREW
154	-	1	BEVEL PINION SHAFT
153	-	1	BEVEL GEAR
152	-	1	BEARING CAP
151	-	1	BEVEL HOUSING ADAPTER
150	-	1	BEVEL HOUSING
45	-	1	PIPE PLUG
44	-	1	QUAD RING
	42-11	1	'O'-RING
6	-	1	HOUSING COVER SHIM

L120-11000
Sheet 13 of 16

OPTIONAL SIDE-MOUNTED HANDWHEEL

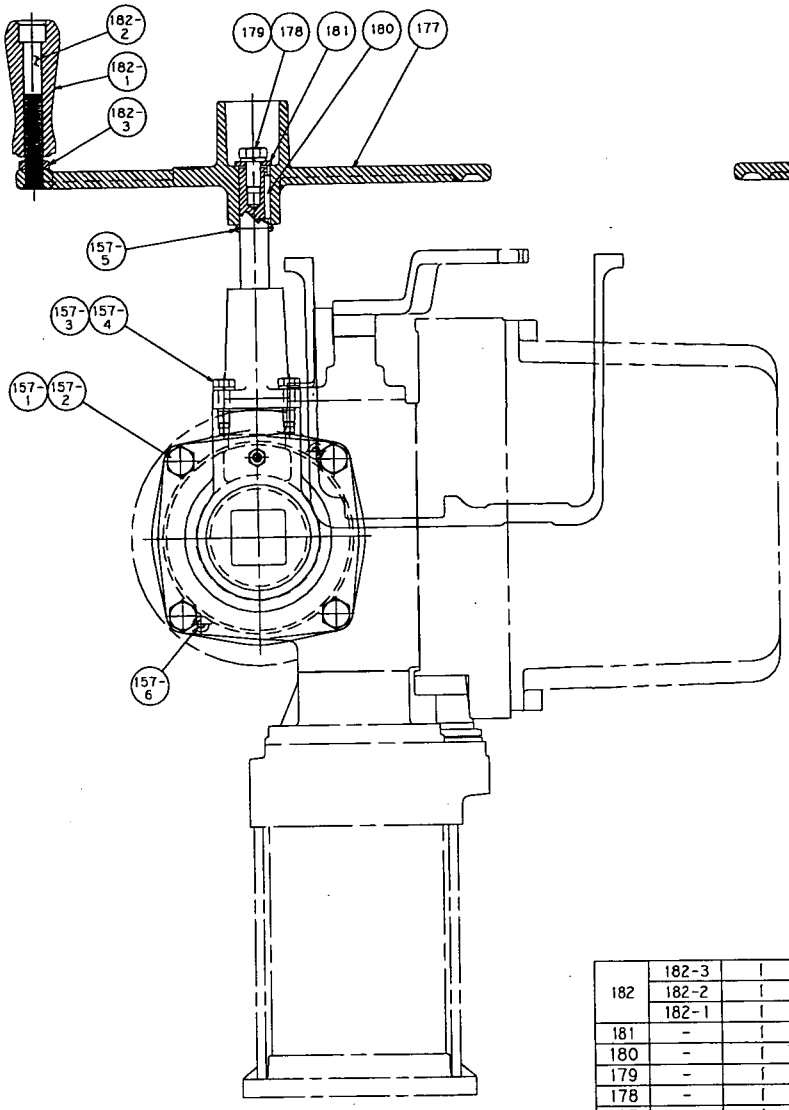

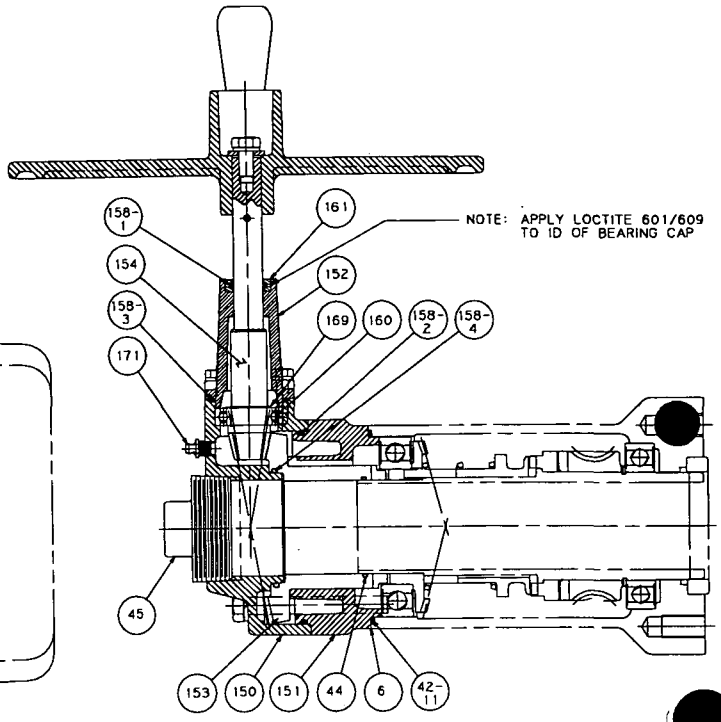

L120-20

HANDWHEEL RATIO: 5.7:1

PC. NO.	SUB PC. NO.	L120-20 QTY.	NAME
182	182-3	1	HEX. JAM NUT
	182-2	1	SOCK. HEAD CAP SCREW
	182-1	1	HANDWHEEL SPINNER
181	-	1	RETAINING WASHER
180	-	1	KEY
179	-	1	LOCKWASHER
178	-	1	HEX. HEAD CAP SCREW
177	-	1	HANDWHEEL
171	-	1	GREASE FITTING
169	-	1	RETAINING RING
161	-	1	SEAL INSERT
160	-	1	BALL BEARING
158	158-4	1	QUAD-RING
	158-3	1	'O'-RING
	158-2	1	'O'-RING
	158-1	1	QUAD RING
157	157-6	2	SOCKET HEAD CAP SCREW
	157-5	1	ROLL PIN
	157-4	4	LOCKWASHER
	157-3	4	HEX HEAD CAP SCREW
	157-2	4	LOCKWASHER
	157-1	4	HEX HEAD CAP SCREW
154	-	1	BEVEL PINION SHAFT
153	-	1	BEVEL GEAR
152	-	1	BEARING CAP
151	-	1	BEVEL HOUSING ADAPTER
150	-	1	BEVEL HOUSING
45	-	1	PIPE PLUG
44	-	1	QUAD RING
	42-11	1	'O'-RING
6	-	1	HOUSING COVER SHIM

L120-11000
Sheet 14 of 16

OPTIONAL SIDE-MOUNTED HANDWHEEL

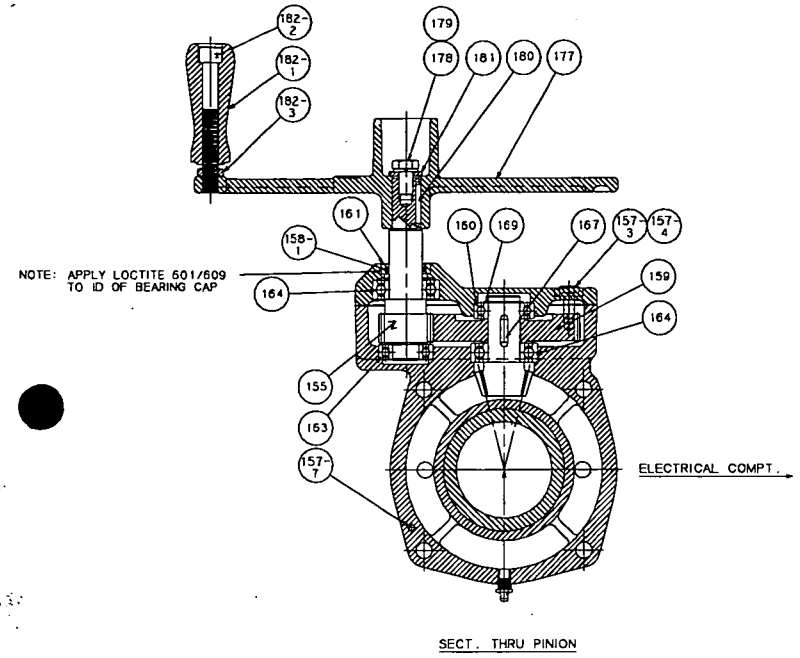

SECT. THRU PINION

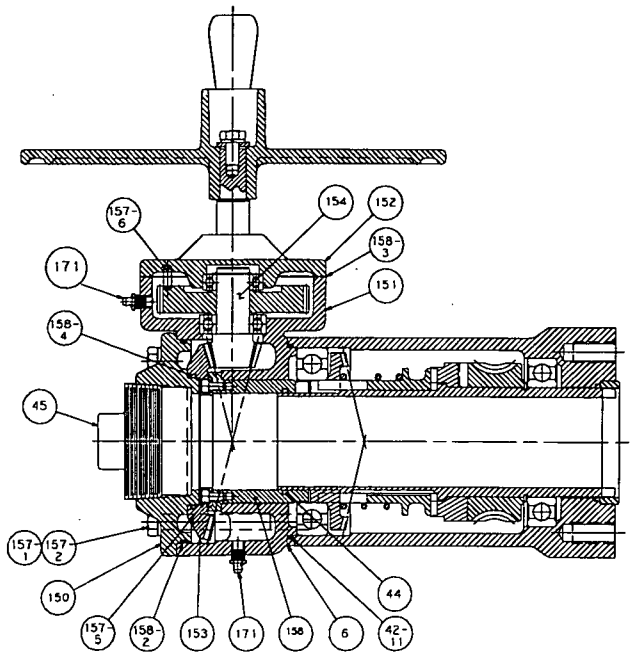

L120-40

HANDWHEEL RATIO: 12:1

PC. NO.	SUB PC. NO.	L120-40 QTY.	NAME
182-3	182-3	1	HEX. JAM NUT
182-2	182-2	1	SOCK. HEAD CAP SCREW
182-1	182-1	1	HANDWHEEL SPINNER
181	-	1	RETAINING WASHER
180	-	1	KEY
179	-	1	LOCKWASHER
178	-	1	HEX. HEAD CAP SCREW
177	-	1	HANDWHEEL
171	-	1	GREASE FITTING
169	-	1	RETAINING RING
167	-	1	KEY
164	-	2	BALL BEARING
163	-	1	BALL BEARING
161	-	1	SEAL INSERT
160	-	1	BALL BEARING
159	-	1	SPUR GEAR
158	158-4	1	QUAD-RING
	158-3	1	GASKET
	158-2	1	'O'-RING
	158-1	1	QUAD RING
157	157-7	1	SOCKET HEAD CAP SCREW
	157-6	2	DOWEL PIN
	157-5	8	SOCKET HEAD CAP SCREW
	157-4	4	LOCKWASHER
	157-3	4	HEX HEAD CAP SCREW
	157-2	4	LOCKWASHER
	157-1	4	HEX HEAD CAP SCREW
156	-	1	BEVEL GEAR ADAPTER
155	-	1	INPUT PINION SHAFT
154	-	1	BEVEL PINION
153	-	1	BEVEL GEAR
152	-	1	SPUR GEAR COVER
151	-	1	BEVEL HOUSING
150	-	1	BEVEL HOUSING COVER
45	-	1	PIPE PLUG
44	-	1	QUAD RING
	42-11	1	'O'-RING
6	-	1	HOUSING COVER SHIM

ELECTRICAL START-UP

1. Check that the actuator has been correctly lubricated. This is particularly important if the actuator has been in long-term storage.
2. Ensure that the geared limit switch has been correctly set per instructions in this manual. (see Geared Limit Switch Section).
3. If the valve stem is not visible, remove the stem cover or handwheel cover plate to observe output direction of the drive sleeve.
4. Engage manual operation and hand crank valve well away from end of travel positions.
5. Turn on power supply and push button to "open."
6. Check output rotation — if phase rotation is correct, the valve should begin to open. **If valve begins to close — stop immediately.** Incorrect phase rotation will lead to serious damage if the valve seats.
7. Correct the phase rotation by switching any two of the three power leads for three-phase power, or reversing the armature leads for single-phase or D.C. power.
8. The actuator should now operate correctly and will be stopped at the end of travel positions by torque or limit switch functions.

   (Premature stopping may be caused by incorrect limit switch or torque switch settings or line obstructions in the valve.)
9. Replace stem cover or cover plate.

TYPICAL WIRING DIAGRAM

The wiring diagram below is a representation of a typical application and may not be applicable to your specific actuator. Please refer to the wiring diagram supplied with your unit to confirm the actual equipment supplied.

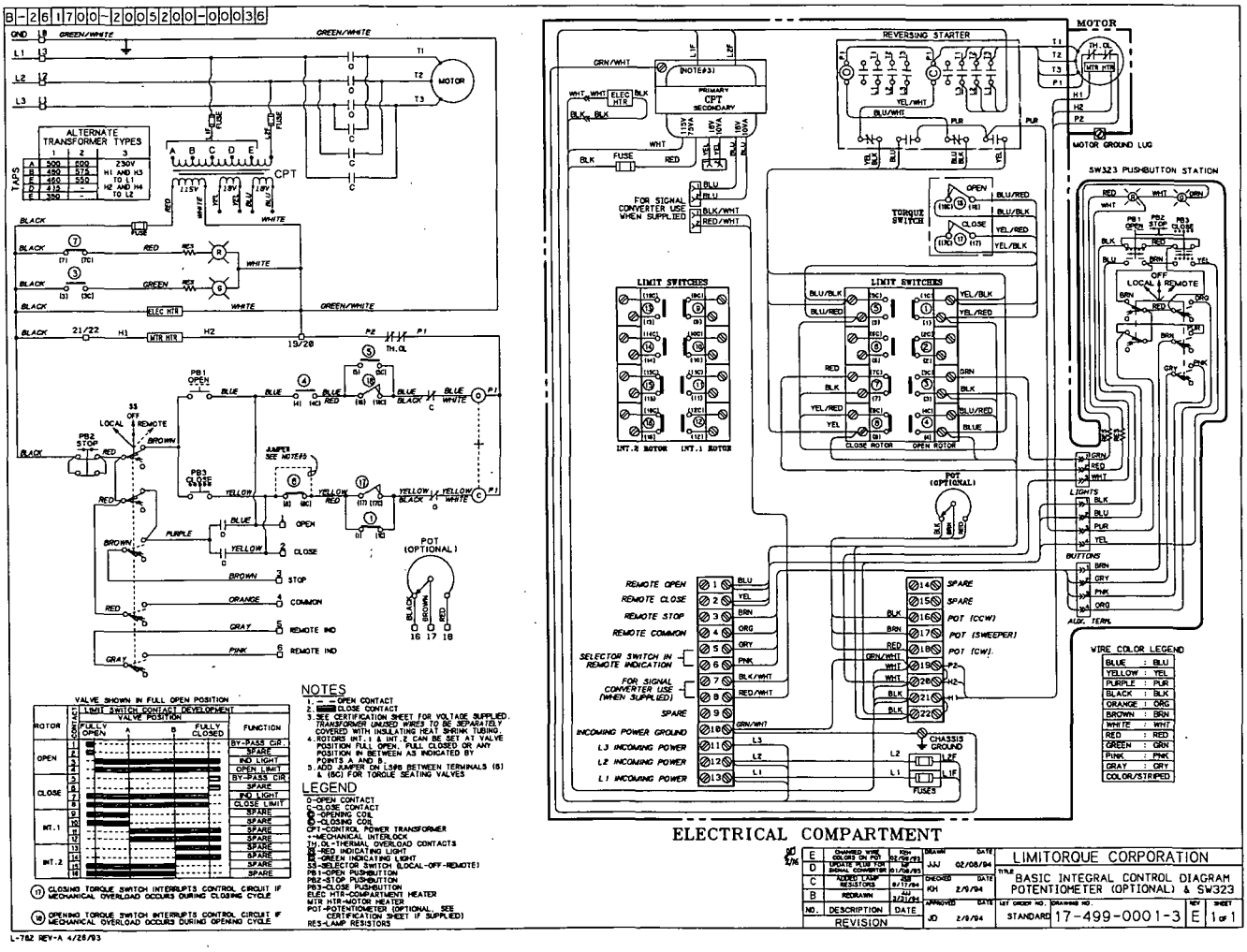

L120-11000
Sheet 16 of 16

Regulatory Information

DECLARATION OF CONFORMITY

Application of Council Directive(s):

89/336/EEC; EMC Directive

89/392/EEC; Machinery Directive

Standard(s) to which Conformity is Declared:

Machinery; EN 60204

EMC; Emmisions; EN 50081-1&2, EN 55011, CFR 47
Immunity; EN 50082-1&2, IEC 801-3 & IEC 801-6
ESD; IEC 801-2
EFT/Bursts; IEC 801-4
Surge Immunity; IEC 801-5, ANSI/IEEE C62.41
Mains (power) Harmonics; MIL-STD-462, Method CSO1 & CSO2

Manufacturer's Name:	Limitorque Corporation
Manufacturer's Address:	5114 Woodall Road, Lynchburg, VA 24502
Importer's Name:	Limitorque International
Importer's Address:	Bone Lane, Newbury Berkshire, RG14 5EH, England
Type & Description of Equipment:	Valve Actuators
Model Number:	L120 Series

Note: Tested with Limitorque Corp. products only

I, the undersigned, hereby declare that the equipment specified above conforms to the above Directive(s) and Standard(s). List as follows:

(Signature)

Thomas Ferdinand Paul May
(Full Name)

Managing Director, Limitorque International
(Title)

Place: Newbury Berkshire, UK

Date: 1/1/97

L2114 1/97

For further Limitorque service assistance call:

Limitorque Corporation
2600 East Miroloma Way
Anaheim, CA 92806
Phone (714) 630-7800
Fax (714) 630-1691

Limitorque Corporation
7615 Boeing Drive
Greensboro, NC 27409-8347
Phone (910) 668-0871
Fax (910) 605-5310

Limitorque Corporation
8901 Jameel Road Suite 180
Houston, TX 77040
Phone (713) 690-1960
Fax (713) 690-1277

or contact the Limitorque offices listed below

Limitorque®

Limitorque Corporation
5114 Woodall Road
P.O. Box 11318
Lynchburg, VA 24506-1318
Phone (804) 528-4400
Fax (804) 845-9736

© Copyright 1997 Printed in U.S.A.

Limitorque International
Trinity House
Kennet Side
Newbury
Berkshire RG14 5EH England
Phone 44-1-635-46999
Fax 44-1-635-36034

Limitorque/Nippon Gear Co. Ltd.
Tennoz Central Tower 2-2-24,
Higashi-Shinagawa, Shinagawa-Ku,
Tokyo, 140 Japan
Phone 81-3-5460-7516
Fax 81-3-5460-8396

Limitorque India, Ltd.
302/90 Nehru Place
Mansaroyar New Delhi 110019
Phone 91-11-643-1748/643-2749
Fax 91-11-683-9329

Limitorque Australia Ltd.
Division of Control Engineering
(Aust.) PTY Ltd.
17 Scoresby Road
Bayswater, Victoria 3153, Australia
Phone 613-9729-0555
Fax 613-9729-8225

Limitorque Asia Pte Ltd.
75 Bukit Timah Rd
#05-01/02 Boon Siew Building
Singapore 229833
Phone 65-332-9100
Fax 65-332-9112

Bulletin 120-11000
Issue 2/97

18th MARCH 1998

MAINTENANCE INSTRUCTIONS HERCUS SVT SERIES VALVE OPERATORS

UNIT – SVT10 GLACIER THRUST **DRAWING – 68MA207**

These units are supplied grease packed and in many circumstances require no regular maintenance other than greasing of the Thrust Bearings at the two nipples. This should be carried out at regular intervals depending on conditions. For those applications where the frequency of operation or other high risk factors make it prudent to carry out periodic maintenance checks we set out the details below.

1) Remove Body Cover (2) (eight screws (4) in cover).

   The interior of the Gearbox can now be examined. Shaft (9) with bearing cones & gears may be lifted out as a unit to check the lower gear.

2) Before replacing the cover, the unit should be repacked with grease. If final gear (5) has been removed the bearing diameters and thrust faces should be coated with grease before replacing.

3) The Thrust Nut (16) and Glacier Thrust Bearings can be examined or removed by dismounting the Gearbox and removing them from the bottom of the gearbox. The Glacier Bearings should be coated with grease as they are replaced.

IMPORTANT

The Glacier Thrust Nut Assembly should have from 0.008" to 0.012" (0.2 to 0.3mm) end play. This end play is set at assembly and need only be checked when renewing Glacier Thrust Washers.

RECOMMENDED GREASE

SHELL ALVANIA E.P. GREASE 1
OR EQUIVALENT PRODUCT

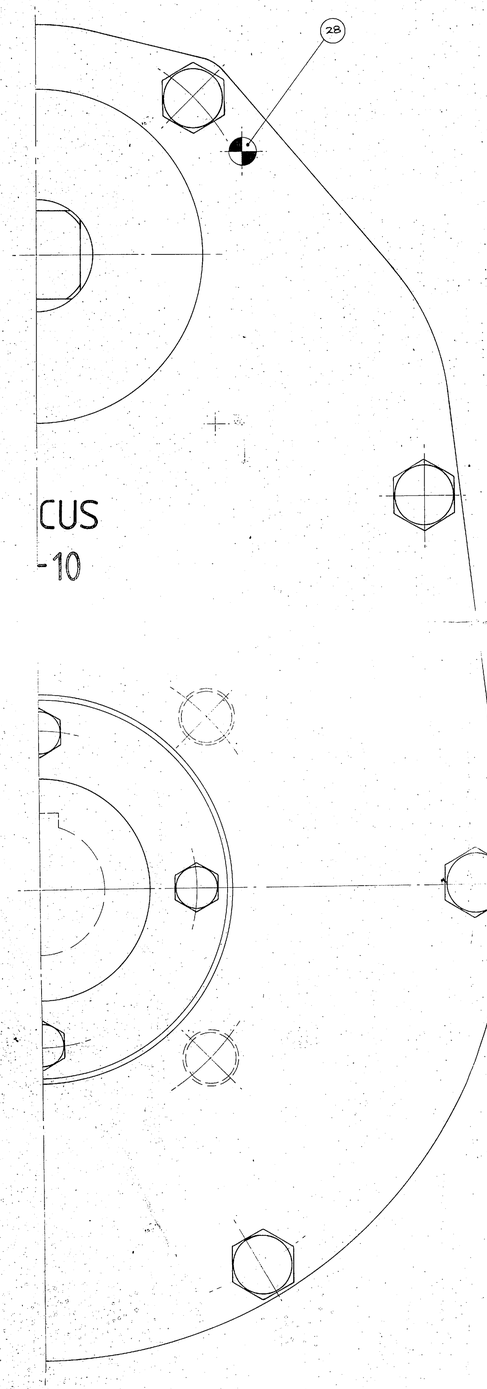

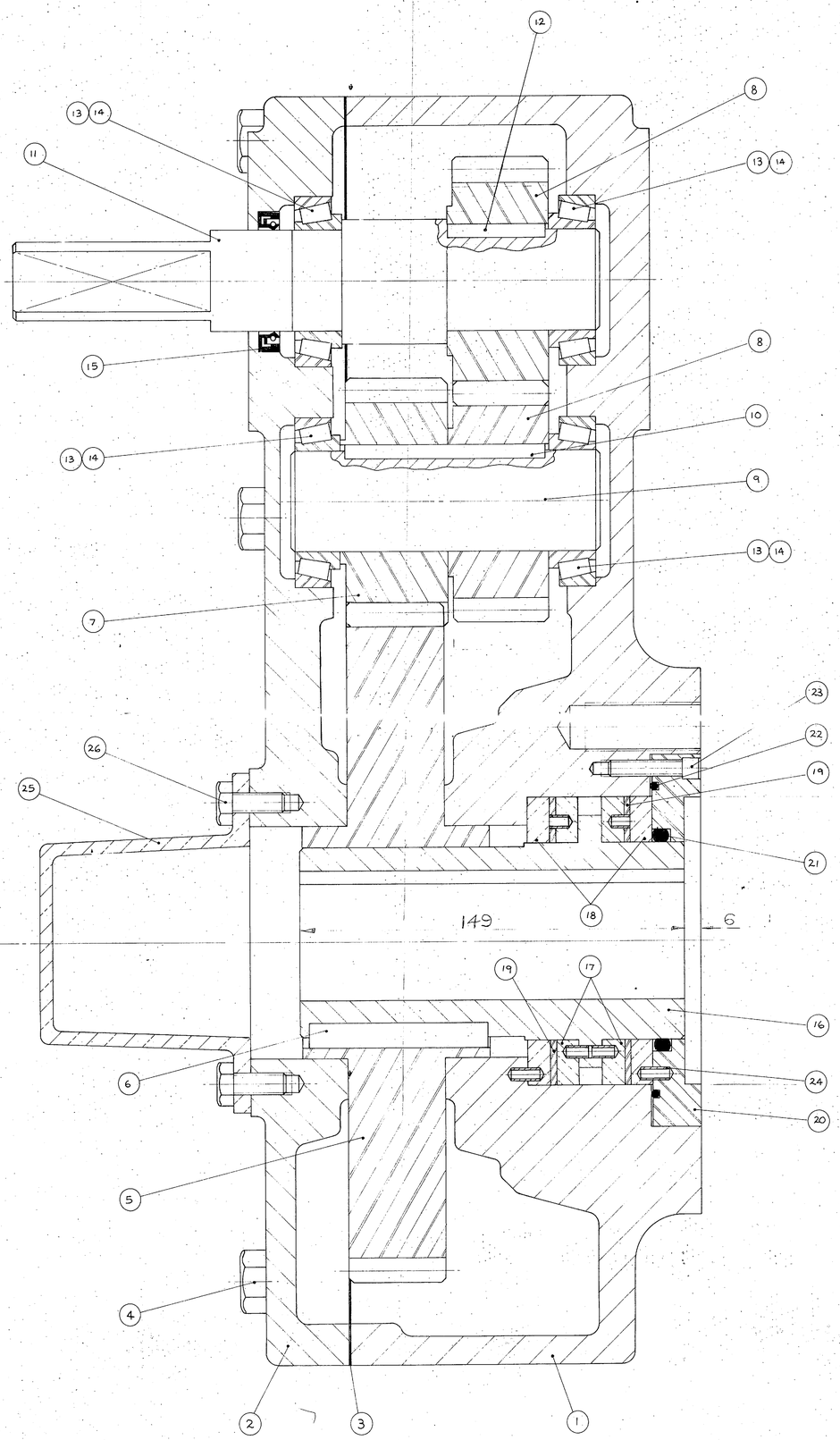

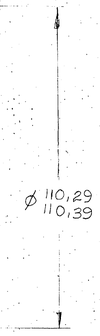

ITEM	PART NO.	NAME	QTY.	MATERIAL
29	P35N0751	NAME PLATE	1	
28	AFK2158	DOWEL	2	ø 3/8 x 1 3/4 H.D.
27	ABR0414	OIL NIPPLE	2	H29
26	AFB2134	SCREWS FOR COVER TUBE	4	5/16 W x 2 1/2 HEX HSS
25	66M0225	COVER TUBE 3"	1	ALUMINIUM
24	AFL1100	RETAINING PINS	6	3/16 x 1/4 ROLL PIN
23	AFC1117	SCREWS FOR PLATE	8	1/4 W x 1 SHCS
22	AB50261	O RING	1	114 x 3
21	AB50251	O RING	1	75 x 5
20	68M0293	RETAINING PLATE	1	316 STAINLESS
19	68M0292	THRUST WASHER	2	GLACIER DU
18	68M0291	FIXED THRUST RING	2	420 STAINLESS
17	68M0290	ROTATING THRUST RING	2	316 STAINLESS
16	68M0276	THRUST NUT - G	1	S1115
15	AB50029	OIL SEAL	1	C3560
14	ABT0052	BEARING CUP	4	CUP LM29710
13	ABT0051	BEARING CONE	4	CONE LM29749
12	68M0264	INPUT KEY	1	EN6A
11	68M0266	INPUT SHAFT 30 SQUARE	1	S1045
10	68M0265	INTERMEDIATE KEY	1	EN6A
9	68M0255	INTERMEDIATE SHAFT	1	S1045
8	68M0241	PRIMARY GEAR	2	S1045
7	68M0231	DRIVE PINION 3:1	1	S1045
6	68M0279	KEY FOR GEAR	1	EN6A
5	68M0221	DRIVE GEAR	1	S1045
4	AFB2198	SCREWS FOR COVER	8	1/2 W x 1 3/4 HEX H.S.S.
3	P68M0220	GASKET	1	1/16 PETROL & OIL PROOF GASKET
2	68M0217	COVER OPEN	1	CAST IRON GR.14
1	68M0215	BODY BASE - G	1	CAST IRON GR.14
	65103330200	SV10 3:1 GLACIER		

DRAWN	A.S.
SCALE	1:1
APPD	
DATE	3/5/90

F. W. HERCUS PTY. LIMITED

SV10 - G SPUR GEAR VALVE OP

68MA207

18th MARCH 1998

MAINTENANCE INSTRUCTIONS HERCUS BV SERIES VALVE OPERATORS

UNIT – BVT35 GLACIER THRUST **DRAWING – 66MA320**

These units are supplied grease packed and in many circumstances require no regular maintenance other than greasing of the Thrust Bearings at the two nipples. This should be carried out at regular intervals depending on conditions. For those applications where the frequency of operation or other high risk factors make it prudent to carry out periodic maintenance checks we set out the details below.

1) Remove Body Cover (2) (eight screws (3) in cover).

   The interior of the Gearbox can now be examined. If further dismantling is required then follow the procedure set out below

2) Before replacing the cover, the unit should be repacked with grease. When doing this the area of the unit on the Pinion side of the output centre line should be filled

3) The Thrust Nut (22) and Glacier Thrust Bearings can be examined or removed by dismounting the Gearbox and removing them from the bottom of the gearbox. The Glacier Bearings should be coated with grease as they are replaced.

DISMANTLING PROCEDURE

A) To remove bevel pinion shaft assembly remove 4 screws (11) and withdraw assembly from gearcase.

B) If pinion shaft (12) is to be removed, release retaining screw (16) and withdraw square input shaft (14), key (15), circlip (17) and spacer (18) and then press pinion shaft (12) through bearing cones.

C) Bevel gear can be removed by lifting it straight out.

D) When replacing the Bevel Gear (6) ensure that grease is smeared on the backface and the bottom of the Gearcase (1) is filled to the Thrust Pad level.

E) When reassembling the Taper Roller Bearings on the Bevel Pinion Shaft they must be grease packed. If new Bearings have been fitted, the width of the Spacer (18) may have to be adjusted to obtain the correct Bearing setting. These Bearings should have from 0 to 0.002" or 0. to 0.05mm end play.

F) Correct alignment of the Bevel Gears may require reshimming of the face between the Input Sleeve (10) and the Body (1)

IMPORTANT

The Glacier Thrust Nut Assembly in the BVT35 should have from 0.008" to 0.012" (0.2 to 0.3mm) end play. This end play is set at assembly and need only be checked when renewing Glacier Thrust Washers.

RECOMMENDED GREASE

SHELL ALVANIA E.P. GREASE 1
OR EQUIVALENT PRODUCT

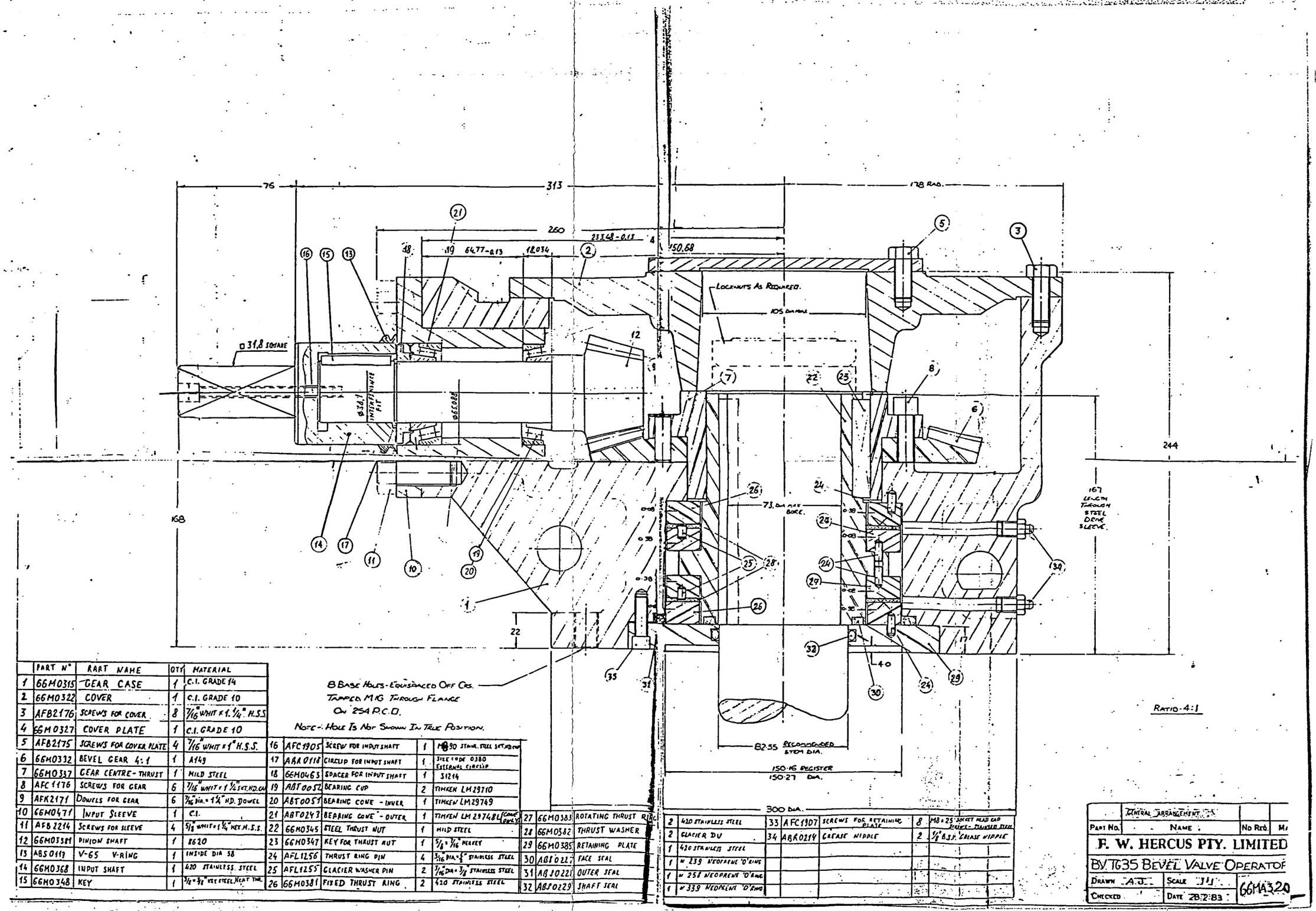

	PART N°	PART NAME	QTY	MATERIAL
1	66M0315	GEAR CASE	1	C.I. GRADE 14
2	66M0322	COVER	1	C.I. GRADE 10
3	AFB2176	SCREWS FOR COVER	8	7/16" WHIT x 1.1/4" H.S.S
4	66M0327	COVER PLATE	1	C.I. GRADE 10
5	AFB2175	SCREWS FOR COVER PLATE	4	7/16" WHIT x 1" H.S.S.
6	66M0332	BEVEL GEAR 4:1	1	A149
7	66M0337	GEAR CENTRE - THRUST	1	MILD STEEL
8	AFC1176	SCREWS FOR GEAR	6	7/16" WHIT x 1 1/4" SKT. HD. CAP
9	AFK2171	DOWELS FOR GEAR	6	7/16" DIA. x 1 1/4" HD. DOWEL
10	66M0471	INPUT SLEEVE	1	C.I.
11	AFB2214	SCREWS FOR SLEEVE	4	5/8" WHIT x 1 1/4" HEX H.S.S.
12	66M0338M	PINION SHAFT	1	8620
13	ABS0119	V-65 V-RING	1	INSIDE DIA 58
14	66M0368	INPUT SHAFT	1	420 STAINLESS STEEL
15	66M0348	KEY	1	3/16 x 3/8" KEY STEEL HEAT TRT.
16	AFC1905	SCREW FOR INPUT SHAFT	1	M8 x 30 STAINL. STEEL SET SCREW
17	ABK0118	CIRCLIP FOR INPUT SHAFT	1	SIZE CODE 0380 EXTERNAL CIRCLIP
18	66M0463	SPACER FOR INPUT SHAFT	1	31214
19	ABT0052	BEARING CUP	2	TIMKEN LM29710
20	ABT0051	BEARING CONE - INNER	1	TIMKEN LM29749
21	ABT0243	BEARING CONE - OUTER	1	TIMKEN LM 29748L (CONE ONLY)
22	66M0345	STEEL THRUST NUT	1	MILD STEEL
23	66M0347	KEY FOR THRUST NUT	1	5/8 x 7/16" MERSEY
24	AFL1256	THRUST RING PIN	4	3/16 DIA x 1/2" STAINLESS STEEL
25	AFL1255	GLACIER WASHER PIN	2	1/16 DIA x 3/8" STAINLESS STEEL
26	66M0381	FIXED THRUST RING	2	420 STAINLESS STEEL
27	66M0383	ROTATING THRUST RING	2	420 STAINLESS STEEL
28	66M0382	THRUST WASHER	2	GLACIER DU
29	66M0385	RETAINING PLATE	1	420 STAINLESS STEEL
30	ABS0227	FACE SEAL	1	N° 239 NEOPRENE 'O' RING
31	ABJ0221	OUTER SEAL	1	N° 258 NEOPRENE 'O' RING
32	ABJ0229	SHAFT SEAL	1	N° 339 NEOPRENE 'O' RING
33	AFC1907	SCREWS FOR RETAINING PLATE	8	M8 x 25 SOCKET HEAD CAP STAINL. STAINLESS STEEL
34	ABK0214	GREASE NIPPLE	2	1/8" B.S.P. GREASE NIPPLE

GENERAL ARRANGEMENT

F. W. HERCUS PTY. LIMITED

BVTG35 BEVEL VALVE OPERATOR

DRAWN A.J. | SCALE 1:1 | 66MA320

CHECKED | DATE 28.2.83

18th MARCH 1998

MAINTENANCE INSTRUCTIONS HERCUS BV SERIES VALVE OPERATORS

UNIT – BVT55 GLACIER THRUST **DRAWING – 66MA413**

These units are supplied grease packed and in many circumstances require no regular maintenance other than greasing of the Thrust Bearings at the two nipples. This should be carried out at regular intervals depending on conditions. For those applications where the frequency of operation or other high risk factors make it prudent to carry out periodic maintenance checks we set out the details below.

1) Remove Body Cover (2) (eight screws (3) in cover).

   The interior of the Gearbox can now be examined. If further dismantling is required then follow the procedure set out below

2) Before replacing the cover, the unit should be repacked with grease. When doing this the area of the unit on the Pinion side of the output centre line should be filled

3) The Thrust Nut (22) and Glacier Thrust Bearings can be examined or removed by dismounting the Gearbox and removing them from the bottom of the gearbox. The Glacier Bearings should be coated with grease as they are replaced.

DISMANTLING PROCEDURE

A) To remove bevel pinion shaft assembly remove 4 screws (11) and withdraw assembly from gearcase.

B) If pinion shaft (12) is to be removed, release retaining screw (16) and withdraw square input shaft (14), key (15), circlip (17) and spacer (18) and then press pinion shaft (12) through bearing cones.

C) Bevel gear can be removed by lifting it straight out.

D) When replacing the Bevel Gear (6) ensure that grease is smeared on the backface and the bottom of the Gearcase (1) is filled to the Thrust Pad level.

E) When reassembling the Taper Roller Bearings on the Bevel Pinion Shaft they must be grease packed. If new Bearings have been fitted, the width of the Spacer (18) may have to be adjusted to obtain the correct Bearing setting. These Bearings should have from 0 to 0.002" or 0. to 0.05mm end play.

F) Correct alignment of the Bevel Gears may require reshimming of the face between the Input Sleeve (10) and the Body (1)

IMPORTANT

The Glacier Thrust Nut Assembly in the BVT55 should have from 0.008" to 0.012" (0.2 to 0.3mm) end play. This end play is set at assembly and need only be checked when renewing Glacier Thrust Washers.

RECOMMENDED GREASE

SHELL ALVANIA E.P. GREASE 1
OR EQUIVALENT PRODUCT

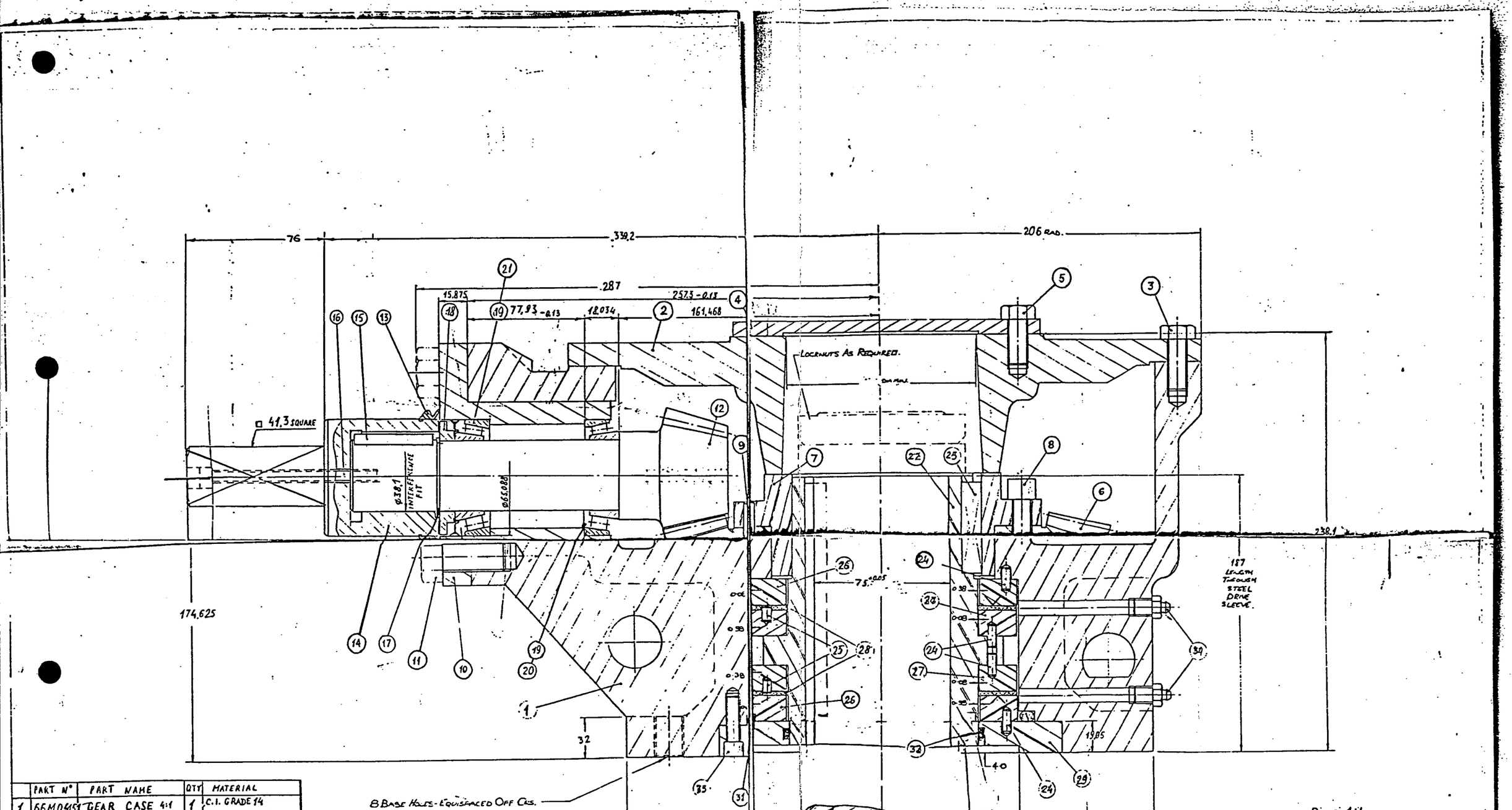

	PART N°	PART NAME	QTY	MATERIAL
1	66M0451	GEAR CASE 4:1	1	C.I. GRADE 14
2	66M0422	BODY COVER - OPEN	1	C.I. GRADE 10
3	AFB2196	SCREWS FOR COVER	8	1/2" WHIT × 1 1/4" H.S.S.
4	66M0427	COVER PLATE	1	C.I. GRADE 10
5	AFB2195	SCREWS FOR COVER PLATE	4	1/2" WHIT × 1" H.S.S.
6	66M0433	BEVEL GEAR 4:1	1	MILD STEEL
7	66M0437	GEAR CENTRE - THRUST	1	MILD STEEL
8	AFC1195	SCREWS FOR GEAR	6	3/4" WHIT × 1 1/2" SKT. HD. CAP
9	AFK2196	DOWELS FOR GEAR	6	1/2" DIA. × 1 1/2" H.D. DOWEL
10	66M0472	INPUT SLEEVE	1	C.I.
11	A[illegible]214	SCREWS FOR SLEEVE	4	5/8" WHIT × 1 1/4" HEX. H.S.S.
12	66[illegible]581	PINION SHAFT	1	8620
13	ABS0119	V-65A V-RING	1	INSIDE DIA 58
14	66M04591	INPUT SHAFT	1	420 STAINLESS STEEL
15	66M0348	KEY	1	1/4 × 3/8" KEY STEEL HEAT THR.
16	AFC1911	SCREW FOR INPUT SHAFT	1	M8 90 STAINL. STEEL SKT. HD. CAP
17	ABR0118	CIRCLIP FOR INPUT SHAFT	1	SIZE CODE 0380 EXTERNAL CIRCLIP
18	66M0463	SPACER FOR INPUT SHAFT	1	S1214
19	ABT0052	BEARING CUP	2	TIMKEN LM29710
20	ABT0051	BEARING CONE - INNER	1	TIMKEN LM29749
21	ABT0243	BEARING CONE - OUTER	1	TIMKEN LM29748L (CONE [illegible])
22	66M0445	THRUST NUT - G	1	MILD STEEL
23	66M0447	KEY FOR THRUST NUT	1	[illegible] KEY
24	AFL1256	THRUST RING PIN	4	3/16" DIA × 1/2" STAINLESS STEEL
25	AFL1255	GLACIER WASHER PIN	2	3/16" DIA × 3/8" STAINLESS STEEL
26	66M0481	FIXED THRUST RING	2	420 STAINLESS STEEL
27	66M0480	ROTATING THRUST RI[illegible]	2	420 STAINLESS STEEL
28	66M0482	THRUST WASHER	2	GLACIER DU
29	66M0485	RETAINING PLATE	1	420 STAINLESS STEEL
30				
31	ABS0232	OUTER SEAL	1	N 364 NEOPRENE 'O' RING
32	ABS0231	SHAFT SEAL 5 1/4" × 5 1/2" [illegible]	1	N 354 NEOPRENE 'O' RING
33	AFC1137	SCREWS FOR RETAINING PLATE	8	5/16" WHIT × 1 1/4" SOCKET HEAD CAP SCREWS - STAINLESS STEEL
34	ABR0214	GREASE NIPPLE	2	1/8" B.S.P. GREASE NIPPLE

PART NO.	NAME	NO. REQ.	MAT.
	GENERAL ARRANGEMENT		

F. W. HERCUS PTY. LIMITED

BV 1G55 BEVEL VALVE OPERATOR

DRAWN A.J. | SCALE | 66MA413

CHECKED | DATE 28.2.83

18th MARCH 1998

MAINTENANCE INSTRUCTIONS HERCUS BV SERIES VALVE OPERATORS

UNIT – BVT55-GA8D-F14 GLACIER THRUST **DRAWING – 66M4A15**

These units are supplied grease packed and in many circumstances require no regular maintenance other than greasing of the Thrust Bearings at the two nipples. This should be carried out at regular intervals depending on conditions. For those applications where the frequency of operation or other high risk factors make it prudent to carry out periodic maintenance checks we set out the details below.

1) Remove Body Cover (25) (eight screws (45) in cover).

   The interior of the Gearbox can now be examined. If further dismantling is required then follow the procedure set out below

2) Before replacing the cover, the unit should be repacked with grease. When doing this the area of the unit on the Pinion side of the output centre line should be filled

3) The Thrust Nut (29) and Glacier Thrust Bearings can be examined or removed by dismounting the Gearbox and removing them from the bottom of the gearbox. The Glacier Bearings should be coated with grease as they are replaced.

SPUR REDUCTION GEARBOX

Remove Adaptor (9) if fitted, remove cover (2) (4 screws). Tapped holes are provided in the cover to enable these to be used as extractor screws. The interior of the gearbox may now be examined

DISMANTLING PROCEDURES

A) Remove adaptor & cover from spur reduction box as described above. Remove gears & shaft assemblies and remove screws which attach spur gear casing. Remove gear case (1)

B) Take out 4 screws & remove bevel pinion shaft assembly sleeve (32) containing the pinion shaft. Remove circlip & press pinion shaft through bearing cones.

C) Bevel gear can be removed by lifting it straight out.

D) When replacing the Bevel Gear ensure that grease is smeared on the backface and the bottom of the Gearcase (24) is filled to the Thrust Pad level.

E) When reassembling the Taper Roller Bearings on the Bevel Pinion Shaft they must be grease packed. If new Bearings have been fitted, the width of the Spacer (31) may have to be adjusted to obtain the correct Bearing setting. These Bearings should have from 0 to 0.002" or 0. to 0.05mm end play.

F) Correct alignment of the Bevel Gears may require reshimming of the face between the Input Sleeve (32) and the Body (24)

G) Spur gear box is then replaced in reverse order to taking off. Pack with grease before replacing covers.

IMPORTANT

The Glacier Thrust Nut Assembly in the BVT55 should have from 0.008" to 0.012" (0.2 to 0.3mm) end play. This end play is set at assembly and need only be checked when renewing Glacier Thrust Washers.

RECOMMENDED GREASE

SHELL ALVANIA E.P. GREASE 1
OR EQUIVALENT PRODUCT

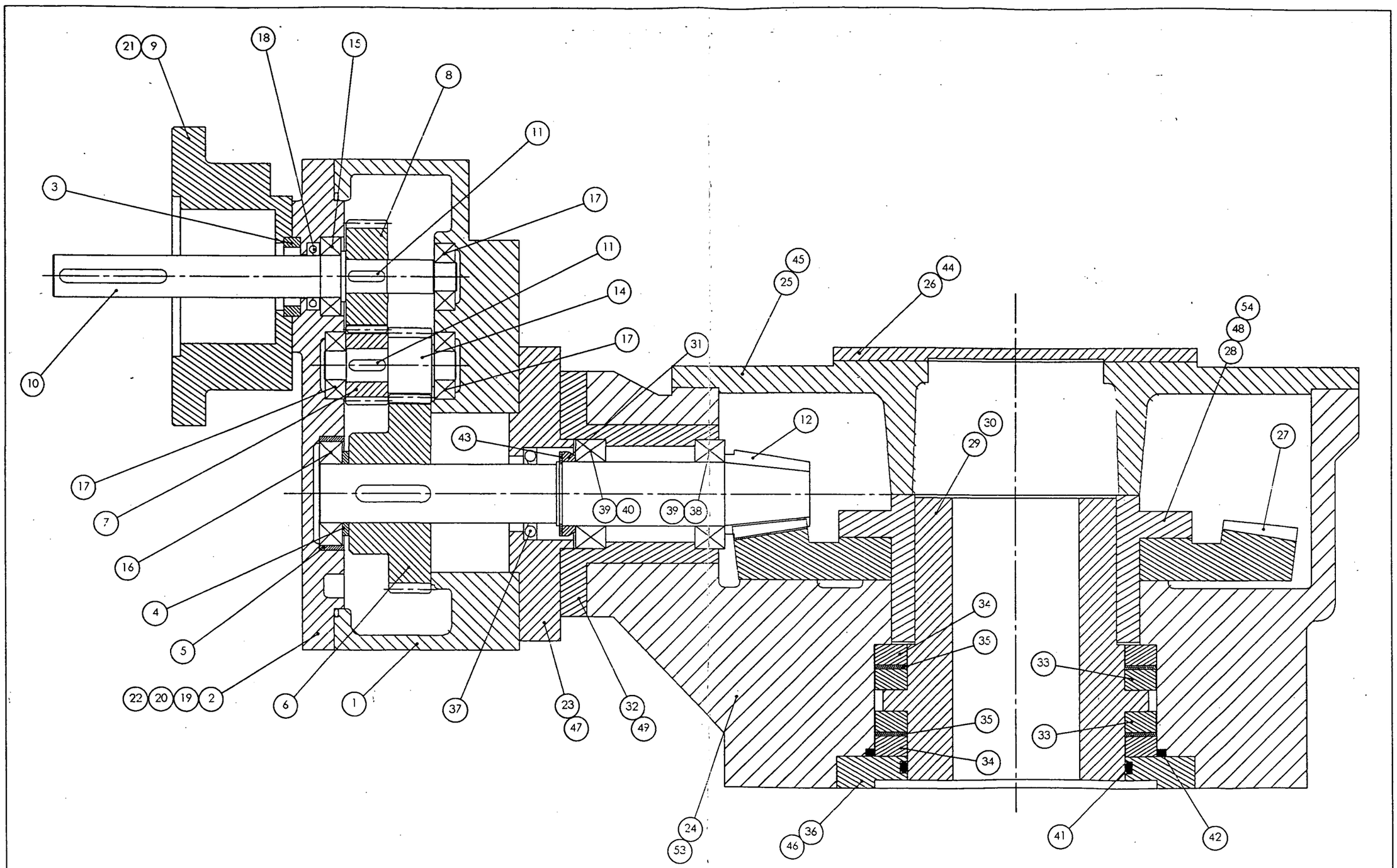

PROTECTIVE TREATMENT	HEAT TREATMENT	MATERIAL

METRIC SIZES ± 0.25mm ECIMAL SIZES ± 0.50mm UNLESS OTHERWISE STATED IF IN DOUBT ASK!	PASSED	DATE 26/2/98	PART NAME BV55G-GA8D-F14 16:1 SECTION
	DRAWN AJ	SCALE 1:2	PART NUMBER 66M4A15 SHEET 1 OF 2 REV.
HERCUS F.W.HERCUS CAMIRA ST. REGENCY PARK SOUTH AUSTRALIA A.C.N. 074 849 513			BV SERIES VALVE OP.

ITEM	PART NUMBER	DESCRIPTION	UNIT QTY	ITEM	PART NUMBER	DESCRIPTION	UNIT QTY
1	63M0610	GEARCASE	1	28	66M0437	GEAR CENTRE	1
2	63M0621	COVER	1	29	66M0445	THRUST NUT GLACIER	1
3	63M0627	ADAPTOR SLEEVE	1	30	66M0447	KEY FOR THRUST NUT	1
4	63M0628	GEAR SPACER	1	31	66M0464	BEARING SPACER	1
5	63M0629	BUSH FOR COVER BEARING	1	32	66M0471	SLEEVE	1
6	63M06321	GEAR 45T 35mm BORE	1	33	66M0480	ROTATING THRUST RING	2
7	63M0653	PINION 20T (RUNS ON GEAR SIDE)	1	34	66M0481	FIXED THRUST RING	2
8	63M0655	PINION 30T (RUNS ON INPUT SIDE)	1	35	66M0482	THRUST WASHER	2
9	63M0662	F14 ADAPTOR FLANGE	1	36	66M0485	RETAINING PLATE	1
10	63M0664	F14 INPUT SHAFT	1	37	BEAR/5532	SEAL PR8170 (35x55x8) (BV SHAFT)	2
11	63M0677	KEY FOR PINION - HDN	2	38	BEAR/5775	BEARING LM29749 CONE	1
12	66M0461	PINION SHAFT 8:1GA8	1	39	BEAR/5776	BEARING LM29710 CUP	2
13	66M0462	KEY FOR PINION SHAFT - HDN	1	40	BEAR/5958	BEARING ASSY LM29748L	1
14	68M0355	INTERMEDIATE PINION SHAFT 15T	1	41	BEAR/7135	SEAL 'O'RING BS354 (5.1/8"x5.1/2"x3/16") (SHAFT SEAL)	1
15	BEAR/0285	BEARING 6005 2RS (25x47x12)	1	42	BEAR/7136	SEAL 'O'RING BS364 (6.3/4"x7.1/8"x3/16") (FACE SEAL)	1
16	BEAR/0295	BEARING 6007 (35x62x14)	1	43	FAST/0074	38mm EXT CIRCLIP	1
17	BEAR/0425	BEARING 6203 (17x40x12)	3	44	FAST/0523S	1/2"BSWX 1" HEX HD SET SCREWS/S	4
18	BEAR/5530	SEAL PR4536 (25x40x7) (INPUT SHAFT)	1	45	FAST/0524S	1/2"BSWX 1 1/4" HEX HD SET SCREWS/S	8
19	BEAR/7090	SEAL 'O'RING BS264 (7.5"x7.75"x0.14")	1	46	FAST/2468S	5/16"BSWX 1 1/4" SKT HD CAP SCREWS/S	8
20	FAST/0448B	3/8"BSWX 1 1/2" HEX HD SET SCREW	4	47	FAST/2525	1/2"BSWX 1 1/4" SKT HD CAP SCREW	4
21	FAST/2485	3/8"BSWX 1" SKT HD CAP SCREW	4	48	FAST/2526	1/2"BSWX 1 1/2" SKT HD CAP SCREW	6
22	TRAN/0865	5/16" X 1" HDN DOWEL	1	49	FAST/2545	5/8"BSWX 2" SKT HD CAP SCREW	4
23	63M0685	ADAPTOR PLATE GA8-BV55	1	50	FAST/9201S	3/16" X 3/8" ROLL PIN S/S	2
24	66M0415	BODY - GLACIER	1	51	FAST/9202S	3/16" X 1/2" ROLL PIN S/S	4
25	66M0422	COVER OPEN	1	52	FITT/0002	1/4"BSPT PLUG	1
26	66M0427	COVER PLATE	1	53	LUBR/0051	1/8"BSP GREASE NIPPLE	2
27	66M0432	BEVEL GEAR 8:1	1	54	TRAN/0906	1/2" X 1 1/2" HDN DOWEL	6

PROTECTIVE TREATMENT	HEAT TREATMENT	MATERIAL

METRIC SIZES ± 0.25mm
BORE SIZES ± 0.50mm
UNLESS OTHERWISE STATED
IF IN DOUBT ASK!

PASSED
DRAWN AJ
DATE 26/2/98
SCALE

PART NAME BV55G-GA8D-F14 16:1 SECTION
PART NUMBER 66M4A15 SHEET 2 OF 2
REV.

HERCUS
F.W.HERCUS
CAMIRA ST. REGENCY PARK
SOUTH AUSTRALIA
A.C.N. 074 849 513

BV SERIES VALVE OP.

18th MARCH 1998

MAINTENANCE INSTRUCTIONS HERCUS BV SERIES VALVE OPERATORS

UNIT – BVT95-GA8D-F16 GLACIER THRUST **DRAWING – 66M5A16**

These units are supplied grease packed and in many circumstances require no regular maintenance other than greasing of the Thrust Bearings at the two nipples. This should be carried out at regular intervals depending on conditions. For those applications where the frequency of operation or other high risk factors make it prudent to carry out periodic maintenance checks we set out the details below.

1) Remove Body Cover (25) (eight screws (47) in cover).

   The interior of the Gearbox can now be examined. If further dismantling is required then follow the procedure set out below

2) Before replacing the cover, the unit should be repacked with grease. When doing this the area of the unit on the Pinion side of the output centre line should be filled

3) The Thrust Nut (29) and Glacier Thrust Bearings can be examined or removed by dismounting the Gearbox and removing them from the bottom of the gearbox. The Glacier Bearings should be coated with grease as they are replaced.

SPUR REDUCTION GEARBOX

Remove Adaptor (9) if fitted, remove cover (2) (4 screws). Tapped holes are provided in the cover to enable these to be used as extractor screws. The interior of the gearbox may now be examined

DISMANTLING PROCEDURES

A) Remove adaptor & cover from spur reduction box as described above. Remove gears & shaft assemblies and remove screws which attach spur gear casing. Remove gear case (1)

B) Take out 4 screws & remove bevel pinion shaft assembly sleeve (33) containing the pinion shaft. Remove circlip & press pinion shaft through bearing cones.

C) Bevel gear can be removed by lifting it straight out.

D) When replacing the Bevel Gear ensure that grease is smeared on the backface and the bottom of the Gearcase (24) is filled to the Thrust Pad level.

E) When reassembling the Taper Roller Bearings on the Bevel Pinion Shaft they must be grease packed. If new Bearings have been fitted, the width of the Spacer (32) may have to be adjusted to obtain the correct Bearing setting. These Bearings should have from 0 to 0.002" or 0. to 0.05mm end play.

F) Correct alignment of the Bevel Gears may require reshimming of the face between the Input Sleeve (33) and the Body (24)

G) Spur gear box is then replaced in reverse order to taking off. Pack with grease before replacing covers.

IMPORTANT

The Glacier Thrust Nut Assembly in the BVT55 should have from 0.008" to 0.012" (0.2 to 0.3mm) end play. This end play is set at assembly and need only be checked when renewing Glacier Thrust Washers.

RECOMMENDED GREASE

SHELL ALVANIA E.P. GREASE 1
OR EQUIVALENT PRODUCT

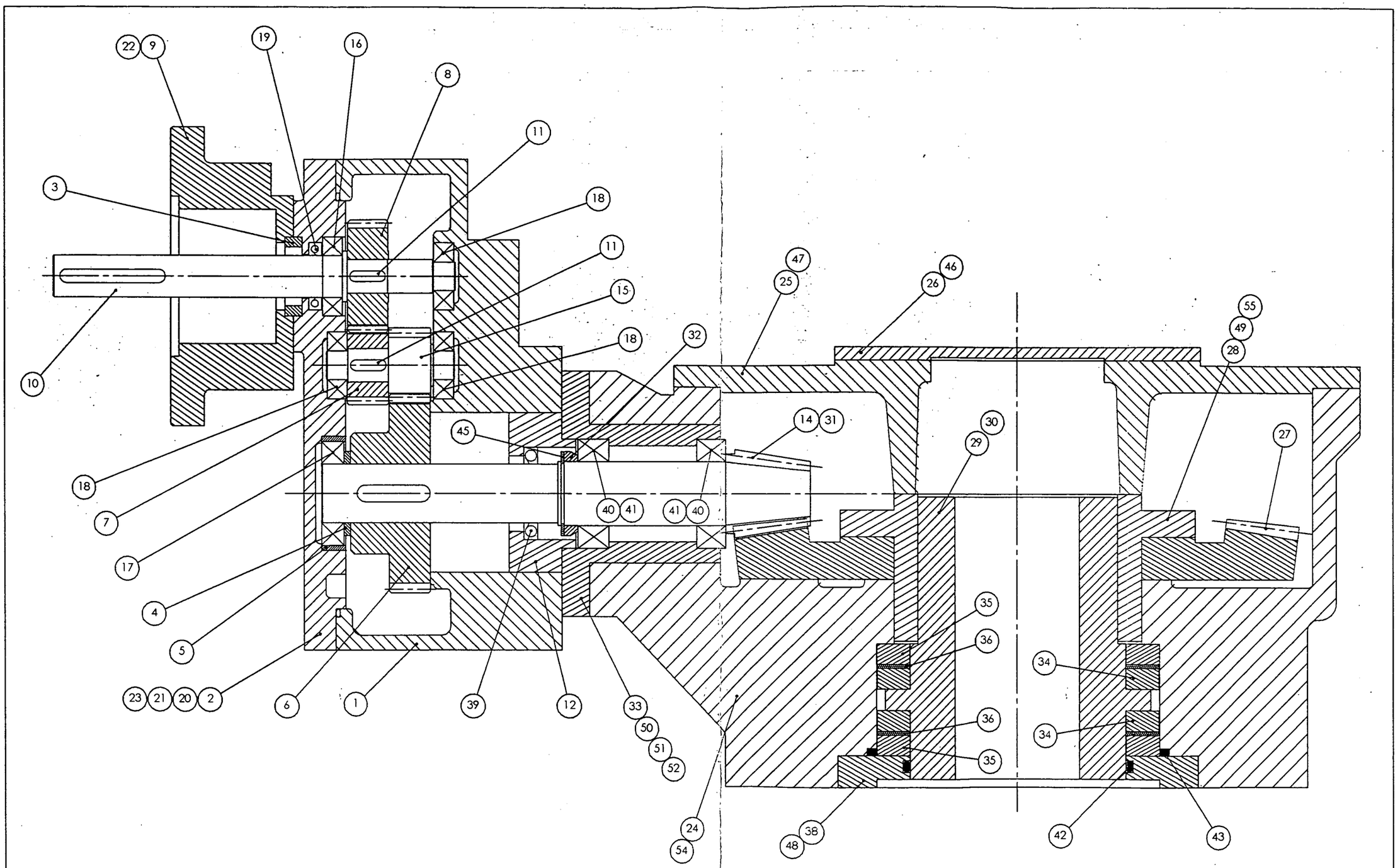

PROTECTIVE TREATMENT	HEAT TREATMENT	MATERIAL

METRIC SIZES ± 0.25mm BORE SIZES ± 0.50mm UNLESS OTHERWISE STATED IF IN DOUBT ASK!	PASSED DRAWN AJ	DATE DATE 18/3/98

PART NAME BV95G-GA8D-F16 16:1 SECTION

PART NUMBER 66M5A16 SHEET 1 OF 2 REV.

Hercus F.W.HERCUS CAMIRA ST. REGENCY PARK SOUTH AUSTRALIA A.C.N. 074 849 513

BV SERIES VALVE OP.

ITEM	PART NUMBER	DESCRIPTION	UNIT QTY
1	63M0612	GEARCASE BV95	1
2	63M0621	COVER	1
3	63M0627	ADAPTOR SLEEVE	1
4	63M0628	GEAR SPACER	1
5	63M0629	BUSH FOR COVER BEARING	1
6	63M06321	GEAR 45T 35mm BORE	1
7	63M0653	PINION 20T (RUNS ON GEAR SIDE)	1
8	63M0655	PINION 30T (RUNS ON INPUT SIDE)	1
9	63M0663	F16 ADAPTOR FLANGE	1
10	63M0664	F14/F16 INPUT SHAFT	1
11	63M0677	KEY FOR PINION - HDN	2
12	63M0695	SEAL ADAPTOR	1
13	66M0462	KEY FOR PINION SHAFT - HDN	1
14	66M0556	PINION SHAFT 8:1GA8	1
15	68M0355	INTERMEDIATE PINION SHAFT 15T	1
16	BEAR/0285	BEARING 6005 2RS (25x47x12)	1
17	BEAR/0295	BEARING 6007 (35x62x14)	1
18	BEAR/0425	BEARING 6203 (17x40x12)	3
19	BEAR/5530	SEAL PR4538 (25x40x7) (INPUT SHAFT)	1
20	BEAR/7090	SEAL 'O'RING BS264 (7.5"x7.75"x0.14")	1
21	FAST/0448B	3/8"BSW X 1.1/2" HEX HD SET SCREW	4
22	FAST/2485	3/8"BSW X 1" SKT HD CAP SCREW	4
23	TRAN/0865	5/16" X 1" HDN DOWEL	1
24	66M0515	BODY - GLACIER	1
25	66M0522	COVER OPEN	1
26	66M0427	COVER PLATE	1
27	66M0532	BEVEL GEAR 8:1	1

ITEM	PART NUMBER	DESCRIPTION	UNIT QTY
28	66M0537	GEAR CENTRE	1
29	66M0545	THRUST NUT GLACIER	1
30	66M0547	KEY FOR THRUST NUT	1
31	66M0562	PINION SPACER	1
32	66M0563	BEARING SPACER	1
33	66M0571A	SLEEVE - GA8	1
34	66M0880	ROTATING THRUST RING	2
35	66M0881	FIXED THRUST RING	2
36	66M0882	THRUST WASHER	2
37	66M0883	THRUST RING PIN	4
38	66M0885	RETAINING PLATE	1
39	BEAR/5570	SEAL C8289 (40x55x8) (BV SHAFT)	2
40	BEAR/5803	BEARING 25580 CONE	2
41	BEAR/5804	BEARING 25520 CUP	2
42	BEAR/7127	SEAL 'O'RING BS339 (3.1/4"x3.5/8"x3/16") (SHAFT SEAL)	1
43	BEAR/7152	SEAL 'O'RING BS426 (4.5/8"x5.1/8"x1/4") (FACE SEAL)	1
44	BEAR/7155	SEAL 'O'RING BS445 (8"x8.1/2"x1/4") (OUTER SEAL)	1
45	FAST/0050	1.3/4" EXT CIRCLIP	1
46	FAST/0523S	1/2"BSW X 1" HEX HD SET SCREW S/S	4
47	FAST/0564S	5/8"BSW X 1.1/2" HEX HD SET SCREW S/S	8
48	FAST/2486S	3/8"BSW X 1.1/4" SKT HD CAP SCREW S/S	8
49	FAST/2526	1/2"BSW X 1.1/2" SKT HD CAP SCREW	8
50	FAST/2530	1/2"BSW X 2.1/2" SKT HD CAP SCREW	1
51	FAST/2565	3/4"BSW X 2.1/4" SKT HD CAP SCREW	1
52	FAST/2568	3/4"BSW X 3" SKT HD CAP SCREW	2
53	FITT/0002	1/4"BSPT PLUG	1
54	LUBR/0051	1/8"BSP GREASE NIPPLE	2
55	TRAN/0906	1/2" X 1.1/2" HDN DOWEL	8

PROTECTIVE TREATMENT	HEAT TREATMENT	MATERIAL

METRIC SIZES ± 0.25mm
BORE SIZES ± 0.50mm
UNLESS OTHERWISE STATED
IF IN DOUBT ASK!

PASSED
DATE 18/3/98
DRAWN AJ
SCALE

PART NAME BV95G-GA8D-F16 16:1 SECTION
PART NUMBER 66M5A16 SHEET 2 OF 2
REV.

HERCUS
F.W.HERCUS
CAMIRA ST. REGENCY PARK
SOUTH AUSTRALIA
A.C.N. 074 849 513

BV SERIES VALVE OP.

Section 8

DRAWINGS

Drawing No	John Valve Item No	Test Cert No
AL421	694A0450-S023	6241
AL420	694A0600-S020	6240
AL419	694A0750-S011	6239
AL418	694A0900-S010	6238
AL417	694A0900-S009	6238
AL416	694A1200-S001	6269

THIRD ANGLE PROJECTION

CLIENT	ORDER No.	QTY	REMARKS
BRISBANE CITY COUNCIL	CONTRACT No. R111/96/97	1	FLANGES DRILLED AS4087 FIG.B2 MAX. WORKING PRESSURE -1400 KPa TESTING: BODY -2800 KPa SEAT -1400 KPa COATING: INT & EXT JOTACOTE 412 MIN. DFT 500 MICRON

AL421

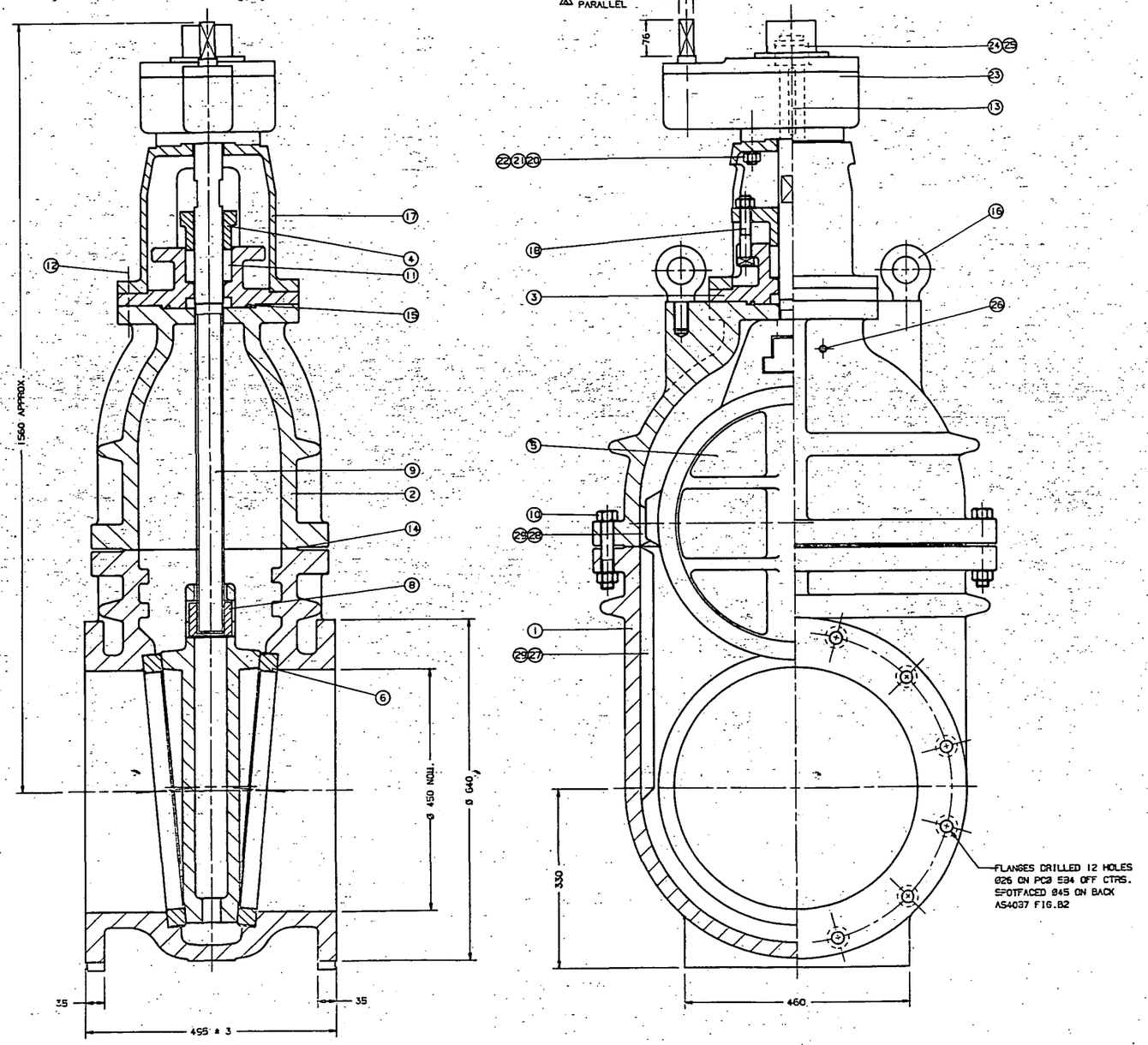

ITEM	QTY	DESCRIPTION	MATERIAL	SPECIFICATION	DETAIL
29.	14	SCREW, PATCH	A.B.	AS1567-636	4759
28.	2	LINER, BONNET	G.M.	AS1565 C83600	
27.	2	LINER, BODY	G.M.	AS1565 C83600	
26.	1	PLUG -1/2"BSPT	G.W.I.		
25.	2	SCREW, GRUB -M6 X 16 LG.	A.S.		
24.	1	NUT, THRUST	C.S.	AS1443-CS1020	980720
23.	1	GEARBOX -HERCUS SVT10 SPUR (3:1 RATIO)			24672B
22.	4	WASHER, SPRING-Ø20	C.S.		
21.	4	NUT -M20	C.S.	GALVANISED	
20.	4	STUD -M20 X 70 LG.	C.S.	GALVANISED	
19.	4	SCREW, DRIVE -No.4 X 6 LG.	S.S.		
18.	2	BOLT -7/8"BSW X 120 LG.	S.S.	AS2837 Gr. 316	
17.	1	STAND, GEARBOX	C.I.	AS1830 T220	70492A
16.	2	EYEBOLT -M20	H.T.S.	GALVANISED	
15.	1	O-RING -BS438	NITRILE		
14.	1	GASKET - BODY/BONNET -3mm TK.	RUBBER INSERTION		450-5650-14
13.	1	KEY -14 X 9 X 135 LG.	KEY STEEL		
12.	8	BOLT -M20 X 100 LG.	C.S.	GALVANISED	
11.	1	PACKING (SUPPLIED BY OTHERS)			
10.	18	BOLT -M24 X 140 LG.	C.S.	GALVANISED	
9.	1	STEM -A.C.	S.S.	AS2837-431	59451A
8.	1	NUT, WEDGE -A.C.	G.M.	AS1565 C83600	500-5650-13/RH
7.	1	PLATE, IDENTIFICATION	BRASS		97CS5A
6.	2	RING, BODY	G.M.	AS1565 C83600	F/0448/C
5.	1	WEDGE	G.M.	AS1565 C83600	66108A
4.	1	GLAND	G.M.	AS1565 C83600	500-5650-6
3.	1	STUFFINGBOX	C.I.	AS1830 T220	500-5650-5
2.	1	BONNET	C.I.	AS1830 T220	CS214A
1.	1	BODY	SGCI	AS1831 400-12	03714B

450MM FIG 694A SLUICE VALVE WITH HERCUS SVT10 SPUR GEAR OPERATOR

A	23-9-97	INPUT SHAFT DIA 30 A/F SQ.	PF

© COPYRIGHT
This drawing is the subject of copyright and is not to be used or reproduced without prior consent of JOHNVALVES.

LOGAN CITY TRUNK MAIN AMPLIFICATION SCHEME
CONTRACT No: R.111/95/97

DRAWN	CHK'D	APP'D	MASS	SCALE
PF 17-9-97	MM 9-97		1500Kg APPROX	N.T.S.

JOHNVALVES The Valve People
Creswick Road
Ballarat 3350
Victoria
Australia
ACN 005 061 674

DRG. No. AL421 A | SHEET SIZE A1

THIRD ANGLE PROJECTION

CLIENT	ORDER No.	QTY	REMARKS
BRISBANE CITY COUNCIL	CONTRACT No. R111/96/97	1	FLANGES DRILLED AS4087 FIG.B2 MAX. WORKING PRESSURE: 1400 KPa TEST PRESSURES: BODY-2800 KPa SEAT-1400 KPa COATING: INT & EXT JOTACOTE 412 MIN. DFT 500 MICRON

AL420

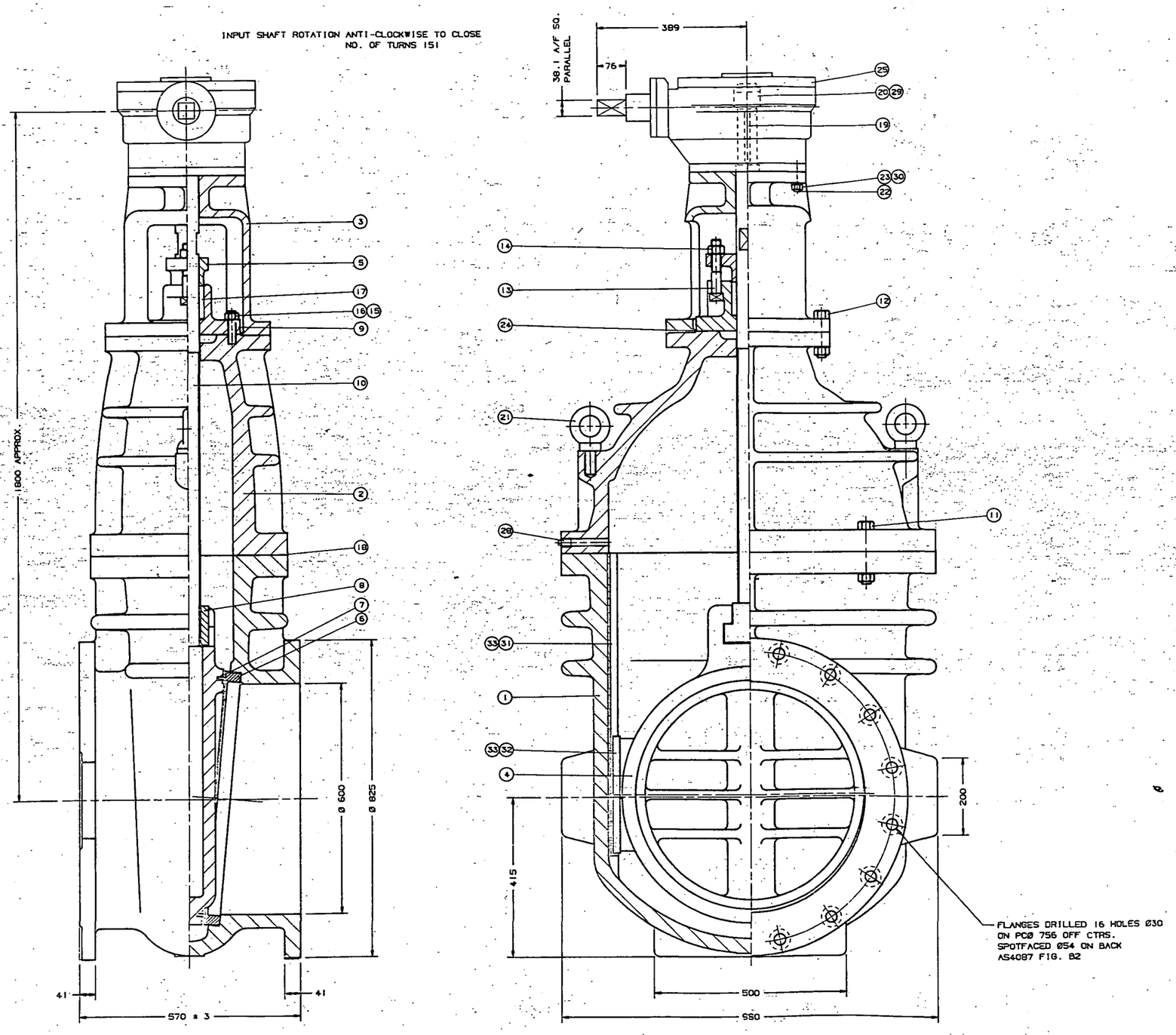

ITEM	QTY	DESCRIPTION	MATERIAL	SPECIFICATION	DETAIL
36.					
35.					
34.					
33.	18	SCREW, PATCH	A.B.	AS1567-686	4759
32.	2	LINER, WEDGE	G.M.	AS1565-C83600	N/U825
31.	2	LINER, BODY	G.M.	AS1565-C83600	L/U825
30.	8	WASHER, SPRING -Ø16	C.S.	GALVANISED	
29.	2	SCREW, GRUB -M6 X 10 LG.	A.S.		
28.	1	PLUG -1/2" BSPT.	G.W.I.		
27.	4	SCREW, DRIVE -No.4 X 6 LG.	S.S.		
26.	1	PLATE, IDENTIFICATION	BRASS		97066A
25.	1	GEARBOX -HERCUS BVT35 BEVEL (4:1 RATIO)			24640B
24.	1	GASKET-S'BOX -1.5TK.	AF2100	PERMANITE	
23.	8	NUT -M16	C.S.	GALVANISED	
22.	8	STUD -M16 X 85 LG.	C.S.	GALVANISED	
21.	2	EYEBOLT -M30	H.T.S.	GALVANISED	
20.	1	NUT, THRUST	C.S.	AS1443 CS1020	98072D
19.	1	KEY -18 X 11 X 135 LG.	KEY STEEL		
18.	1	GASKET-BODY/BONNET -1.5TK.	AF2100	PERMANITE	T704
17.		PACKING (SUPPLIED BY OTHERS)			
16.	8	NUT -M20	C.S.	GALVANISED	
15.	8	STUD -M20 X 90 LG.	C.S.	GALVANISED	
14.	2	NUT -M24	S.S.	AS2837 Gr.304	
13.	2	BOLT -M24 X 140 LG. SQ.HD.	S.S.	AS2837 Gr 316	
12.	12	BOLT -M24 X 100 LG.	C.S.	GALVANISED	
11.	24	BOLT -M24 X 150 LG.	C.S.	GALVANISED	
10.	1	STEM -A.C.	S.S.	AS2837 Gr 431	59630A
9.	1	STUFFINBOX	C.I.	AS1830 T220	63040A
8.	1	NUT, WEDGE -A.C.	G.M.	AS1565 C83600	98007B
7.	2	RING, WEDGE	G.M.	AS1565 C83600	G/Q506/C
6.	2	RING, BODY	G.M.	AS1565 C83600	H/Q506/A
5.	1	GLAND	G.M.	AS1565 C83600	25002A
4.	1	WEDGE	C.I.	AS1830 T220	66047A
3.	1	PIECE, MATCHING	SGCI	AS1831 400-12	70679A
2.	1	BONNET	C.I.	AS1830 T220	C6270A
1.	1	BODY	SGCI	AS1831 400-12	03437A

600mm FIG. 694A SLUICE VALVE WITH HERCUS BVT35 BEVEL GEAR OPERATOR

DRAWN	CHECKED	MAT'L. APPR'D	MASS	SCALE
PF 16-9-97	MM 17-9-97		2000 KG APPROX.	

© COPYRIGHT
This drawing is the subject of copyright and is not to be used or reproduced without prior consent of JOHNVALVES

LOGAN CITY TRUNK MAIN AMPLIFICATION SCHEME
CONTRACT No: R.111/96/97

JOHNVALVES The Valve People
Creswick Road
Ballarat 3350
Victoria
Australia
ACN 005 051 674

DRG. No. AL420 SHEET SIZE A1

69*AC600-5020

THIRD ANGLE PROJECTION

INPUT SHAFT ROTATION ANTI-CLOCKWISE TO CLOSE .
NO. OF TURNS 186

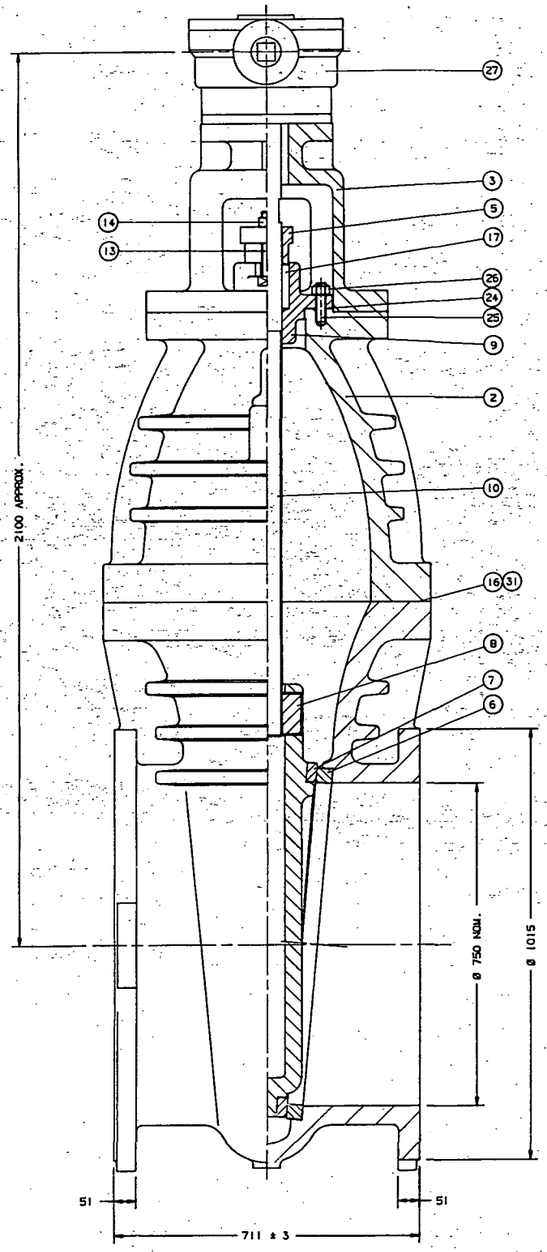

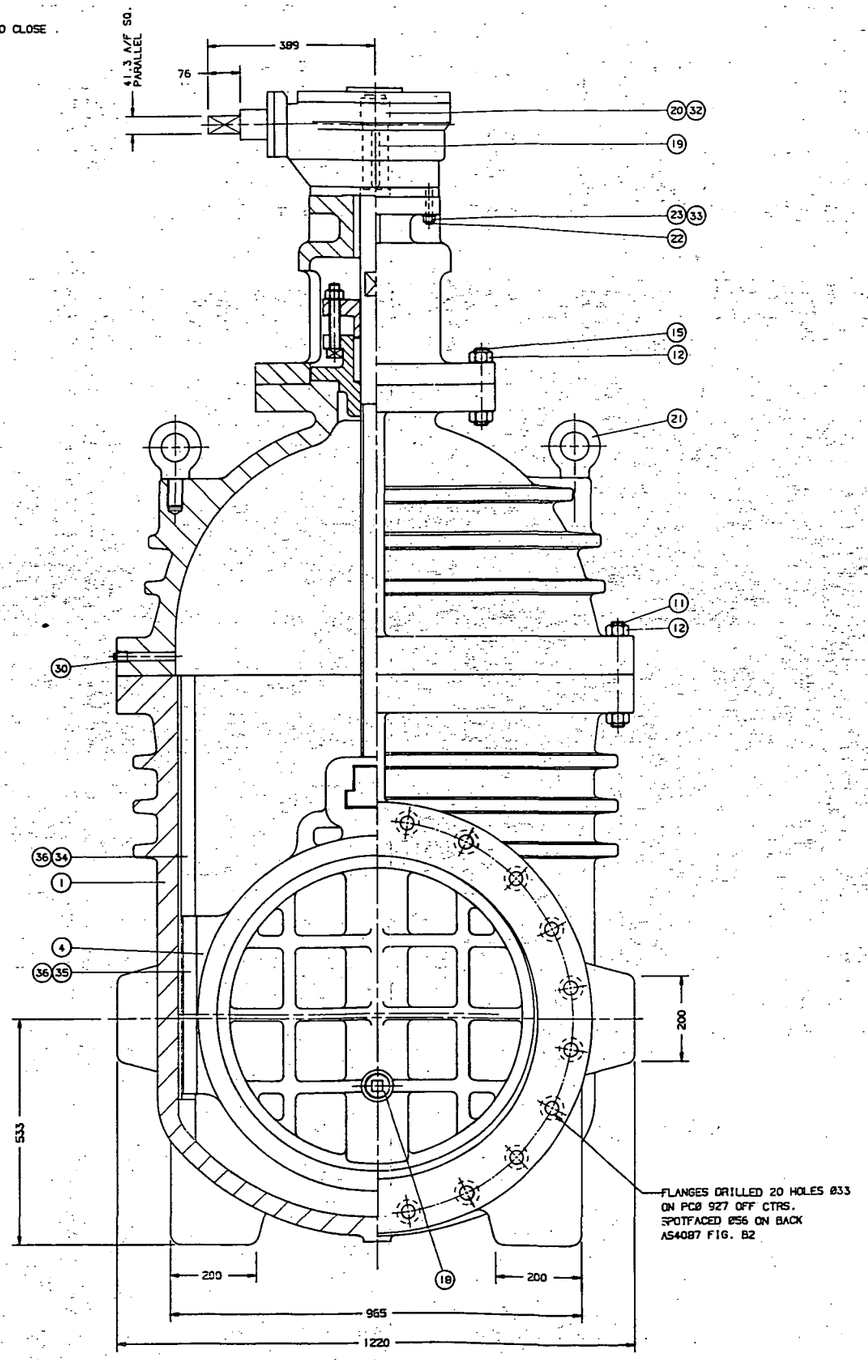

CLIENT	ORDER No.	QTY	REMARKS
BRISBANE CITY COUNCIL	CONTRACT No. R111/96/97	1	FLANGES DRILLED AS4087 FIG.B2 MAX. WORKING PRESSURE:1200 KPa TEST PRESSURES: BODY-2400 KPa SEAT-1200 KPa COATING:INT & EXT JOTACOTE 412 MIN. DFT 500 MICRON

AL419

ITEM	QTY	DESCRIPTION	MATERIAL	SPECIFICATION	DETAIL
36.	36	SCREW,PATCH	A.B.	AS1567-686	4759
35.	2	LINER,WEDGE	G.M.	AS1565-C83600	35006A
34.	2	LINER,BODY	G.M.	AS1565-C83600	35005A
33.	8	WASHER ,SPRING -Ø16	C.S.	GALVANISED	
32.	2	SCREW,GRUB -M8 X 10 LG.	A.S.		
31.	1	O-RING -Ø0.139" X 2240 LG.	NITRILE		
30.	1	PLUG -1/2" BSPT	G.W.I.		
29.	4	SCREW,DRIVE -No.4 X 6 LG.	S.S.		
28.	1	PLATE,IDENTIFICATION	BRASS		97056A
27.	1	GEARBOX -HERCUS BVT35 BEVEL (4:1 RATIO)			24768A
25.	8	NUT -M24	C.S.	GALVANISED	
25.	8	STUD -M24 X 90 LG.	C.S.	GALVANISED	
24.	1	GASKET-S'BOX' -1.5TK.	AF2100	PERMANITE	AJ343 #177
23.	8	NUT -M16	C.S.	GALVANISED	
22.	8	STUD -M16 X 85 LG.	C.S.	GALVANISED	
21.	2	EYEBOLT -M36	H.T.S.	GALVANISED	
20.	1	NUT ,THRUST	C.S.	AS1443 CS1020	98121A
19.	1	KEY -18 X 11 X 135 LG.	KEY STEEL		
18.	2	PLUG -2" BSPT	G.W.I.		
17.		PACKING (SUPPLIED BY OTHERS)			
16.	1	GASKET-BODY/BONNET -1.5TK.	AF2100	PERMANITE	AD535
15.	12	STUD -M30 X 180 LG.	C.S.	GALVANISED	
14.	2	NUT -M24	S.S.	AS2837 Gr.304	
13.	2	BOLT -M24 X 140 LG. SQ.HD.	S.S.	AS2837 Gr 316	
12.	80	NUT -M30	C.S.	GALVANISED	
11.	28	STUD -M30 X 260 LG.	C.S.	GALVANISED	
10.	1	STEM -A.C.	S.S.	AS2837 Gr 431	59629A
9.	1	STUFFINBOX	C.I.	AS1830 T220	63026A
8.	1	NUT,WEDGE -A.C.	G.M.	AS1565 C93600	99153A
7.	2	RING ,WEDGE	G.M.	AS1565 C93600	K/K208
6.	2	RING ,BODY	G.M.	AS1565 C83600	J/K208
5.	1	GLAND	G.M.	AS1565 C83600	25050A
4.	1	WEDGE	C.I.	AS1830 T220	66035B
3.	1	PIECE,MATCHING	C.I.	AS1830 T220	70678A
2.	1	BONNET	C.I.	AS1830 T220	06268A
1.	1	BODY	SGCI	AS1831 400-12	03971A

750mm FIG. 694A SLUICE VALVE WITH HERCUS BVT35 BEVEL GEAR OPERATOR

© COPYRIGHT
This drawing is the subject of copyright and is not to be used or reproduced without prior consent of JOHNVALVES

LOGAN CITY TRUNK MAIN
AMPLIFICATION SCHEME
CONTRACT No: R.111/96/97

DRAWN	CHECKED	MAT'L. APPR'D	MASS	SCALE
PF 9-9-97	MJ 8-9-97		3900 KG APPROX.	

JOHNVALVES The Valve People
Creswick Road
Ballarat 3350
Victoria
Australia
ACN 005 061 674

DRG. No. AL419
SHEET SIZE A1

THIRD ANGLE PROJECTION

CLIENT	ORDER No.	QTY	REMARKS
BRISBANE CITY COUNCIL	CONTRACT No. R111/96/97	2	FLANGES DRILLED AS4087 FIG. B2 MAX. WORKING PRESSURE 1200 KPa TEST PRESSURES: BODY -2400 KPa SEAT -1200 KPa COATING: INT & EXT JOTACOTE 412 MIN. DFT 500 MICRON

AL418

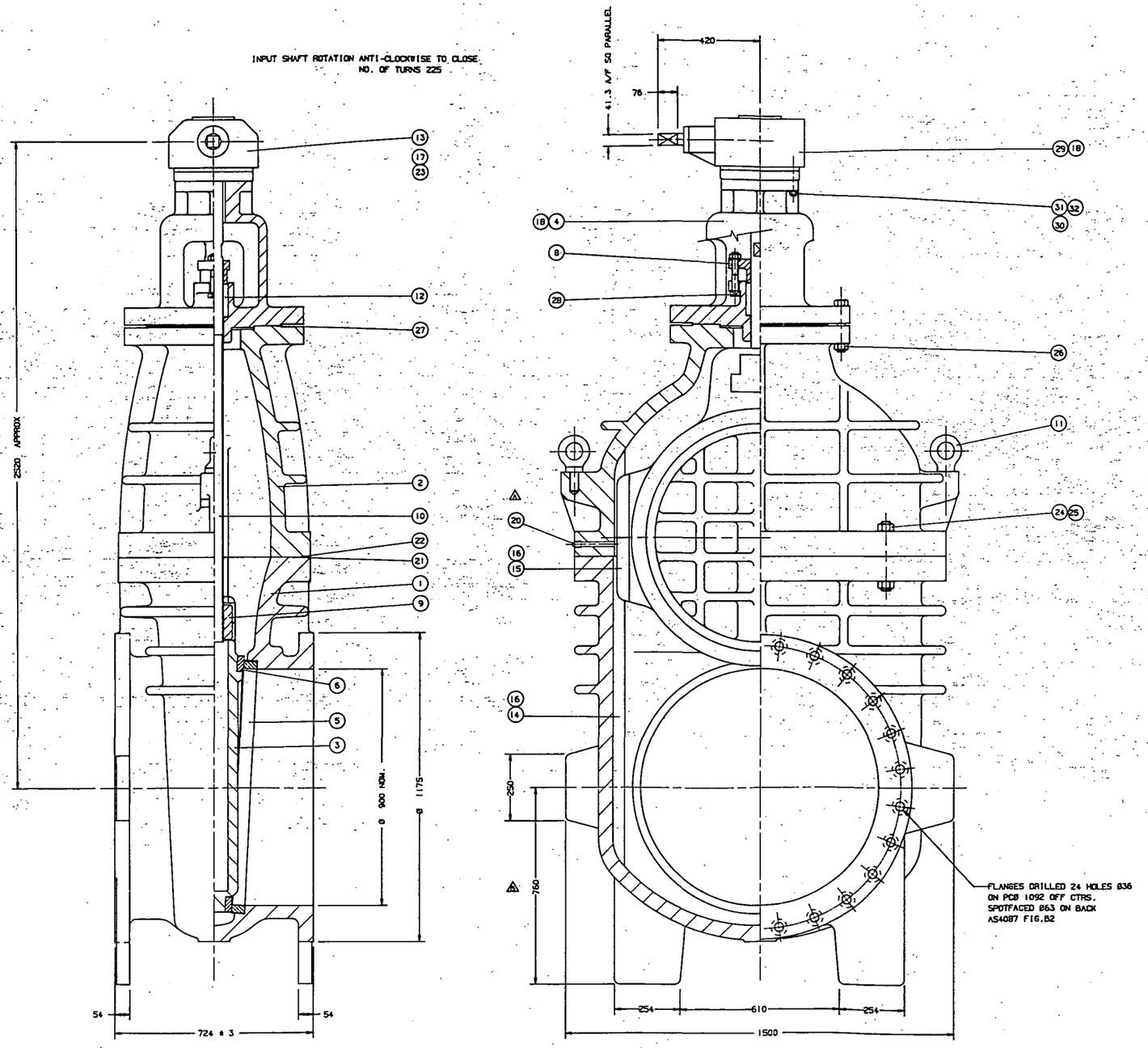

ITEM	QTY	DESCRIPTION	MATERIAL	SPECIFICATION	DETAIL
32.	8	WASHER ,SPRING -Ø20	C.S.	GALVANISED	
31.	8	NUT -M20	C.S.	GALVANISED	
30.	8	STUD -M20 X 100 LG.	C.S.	GALVANISED	
29.	1	GEARBOX -HERCUS BVT55 BEVEL (RATIO 4:1)			24642B
28.	2	BOLT ,SQ.HD.-M24 X 140 LG.	S.S.	AS2837 Gr 316	
27.	1	GASKET	AF2100	PERMANITE	AJ343 #107
26.	16	BOLT ,HX.HD.-M30 X 180 LG.	C.S.	GALVANISED	
25.	64	NUT -M36	C.S.	GALVANISED	
24.	32	STUD -M36 X 270 LG.	C.S.	GALVANISED	
23.	2	SCREW,GRUB- M8 X 12 LG	STEEL		
22.	1	O-RING -0.139" SECT.	NITRILE		
21.	1	GASKET -BODY/BONNET	AF2100	PERMANITE	AA550
20.	1	PLUG-1/2" BSPT	G.W.I.		
19.	2	PLUG-2" BSPT	G.W.I.		
18.	1	PLATE,IDENTIFICATION	BRASS		97066A
17.	1	NUT,THRUST	C.S.	AS 1442-CS1020	98121A
16.	40	SCREW,PATCH	A.B.	AS1567-686	4759
15.	2	LINER ,WEDGE	G.M.	AS1565 C83600	35008A
14.	2	LINER ,BODY	G.M.	AS1565 C83600	35007A
13.	1	KEY -18 X 11 X 150 LG.	KEY STEEL		
12.		PACKING (SUPPLIED BY OTHERS)			
11.	2	EYEBOLT -M36	H.T.S.	GALVANISED	
10.	1	STEM -AC	S.S.	AS2837 Gr 431	59409A
9.	1	NUT ,WEDGE -AC	G.M.	AS1565 C83600	98090A
8.	1	GLAND	G.M.	AS1565 C83600	25057A
7.					
6.	2	RING ,WEDGE	G.M.	AS1565 C83600	H/AF820
5.	2	RING ,BODY	G.M.	AS1565 C83600	G/AF820
4.	1	PIECE,MATCHING	C.I.	AS1830 T220	70456A
3.	1	WEDGE	C.I.	AS1830 T220	66036B
2.	1	BONNET	C.I.	AS1830 T220	06269A
1.	1	BODY	SGCI	AS1831 400-12	03696A

900MM FIG. 694A SLUICE VALVE WITH HERCUS BVT55 BEVEL GEAR OPERATOR

A	17-9-97	B	2-12-97
RELEASED FOR MANUFACTURE	PF	DIM 760 WAS 623	PF

© COPYRIGHT
This drawing is the subject of copyright and is not to be used or reproduced without prior consent of JOHNVALVES

LOGAN CITY TRUNK MAIN AMPLIFICATION SCHEME
CONTRACT No: R.111/96/97

DRAWN	CHECKED	MAT'L. APPR'D	MASS	SCALE
PF 2-9-97	MM 9-97		5500 KG	

JOHNVALVES The Valve People
Creswick Road
Ballarat 3350
Victoria
Australia
ACN 005 061 674

DRG. No. AL418 A B
SHEET SIZE A1

69•A0900-5010

THIRD ANGLE PROJECTION

CLIENT	ORDER No.	QTY	REMARKS
BRISBANE CITY COUNCIL	CONTRACT No. R111/96/97	1	FLANGES DRILLED AS4087 FIG. B2 MAX. WORKING PRESSURE 1200 KPa TEST PRESSURES: BODY -2400 KPa SEAT -1200 KPa COATING: INT & EXT JOTACOTE 412 MIN. DFT 500 MICRON

AL417

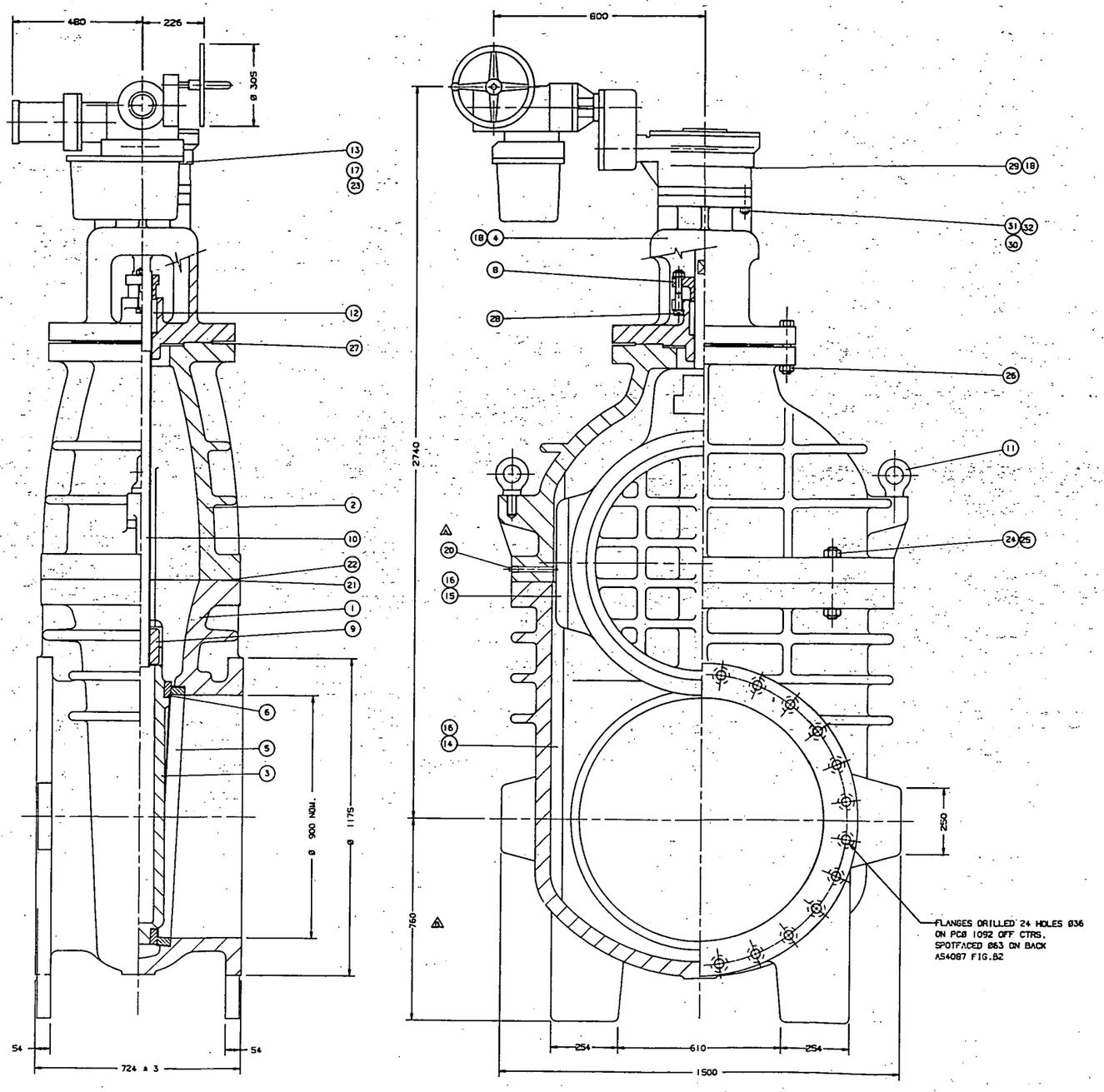

ITEM	QTY	DESCRIPTION	MATERIAL	SPECIFICATION	DETAIL
32.	8	WASHER ,SPRING -Ø20	C.S.	GALVANISED	
31.	8	NUT -M20	C.S.	GALVANISED	
30.	8	STUD -M20 X 100 LG.	C.S.	GALVANISED	
29.	1	ACTUATOR -LIMITORQUE L120-40-25/2,HERCUS BVT55RA7(16:1)			37088A
28.	2	BOLT ,SQ.HD.-M24 X 140 LG.	S.S.	AS2837 Gr 316	
27.	1	GASKET	AF2100	PERMANITE	AJ343 #107
26.	16	BOLT ,HX.HD.-M30 X 180 LG.	C.S.	GALVANISED	
25.	64	NUT -M36	C.S.	GALVANISED	
24.	32	STUD -M36 X 270 LG.	C.S.	GALVANISED	
23.	2	SCREW,GRUB- M8 X 12 LG	STEEL		
22.	1	O-RING -0.139" SECT.	NITRILE		
21.	1	GASKET -BODY/BONNET	AF2100	PERMANITE	AA550
20.	1	PLUG-1/2" BSPT	G.W.I.		
19.	2	PLUG-2" BSPT	G.W.I.		
18.	1	PLATE,IDENTIFICATION	BRASS		97066A
17.	1	NUT,THRUST	C.S.	AS 1442-CS1020	98121A
16.	40	SCREW,PATCH	A.B.	AS1567-686	4759
15.	2	LINER ,WEDGE	G.M.	AS1565 C83600	35008A
14.	2	LINER ,BODY	G.M.	AS1565 C83600	35007A
13.	1	KEY -18 X 11 X 150 LG.	KEY STEEL		
12.		PACKING (SUPPLIED BY OTHERS)			
11.	2	EYEBOLT -M36	H.T.S.	GALVANISED	
10.	1	STEM -AC	S.S.	AS2837 Gr 431	59409A
9.	1	NUT ,WEDGE -AC	G.M.	AS1565 C83600	98090A
8.	1	GLAND	G.M.	AS1565 C83600	25057A
7.					
6.	2	RING ,WEDGE	G.M.	AS1565 C83600	H/AF820
5.	2	RING ,BODY	G.M.	AS1565 C83600	G/AF820
4.	1	PIECE,MATCHING	C.I.	AS1830 T220	70456A
3.	1	WEDGE	C.I.	AS1830 T220	66036B
2.	1	BONNET	C.I.	AS1830 T220	C6269A
1.	1	BODY	SGCI	AS1831 400-12	03696A

900MM FIG. 694A SLUICE VALVE WITH LIMITORQUE L120-40 ELECTRIC ACTUATOR

A	17-9-97	B	2-12-97
RELEASED FOR MANUFACTURE	PF	DIM 760 WAS 623	PF

© COPYRIGHT
This drawing is the subject of copyright and is not to be used or reproduced without prior consent of JOHNVALVES

LOGAN CITY TRUNK MAIN AMPLIFICATION SCHEME
CONTRACT No: R.111/96/97

DRAWN	CHECKED	MAT'L. APPR'D	MASS	SCALE
PF 2-9-97	MM 9-97		5600 KG.	

JOHNVALVES The Valve People
Creswick Road
Ballarat 3350
Victoria
Australia
ACN 005 061 674

DRG. No. AL417 A B
SHEET SIZE A1

69*A0900-[illegible]

THIRD ANGLE PROJECTION

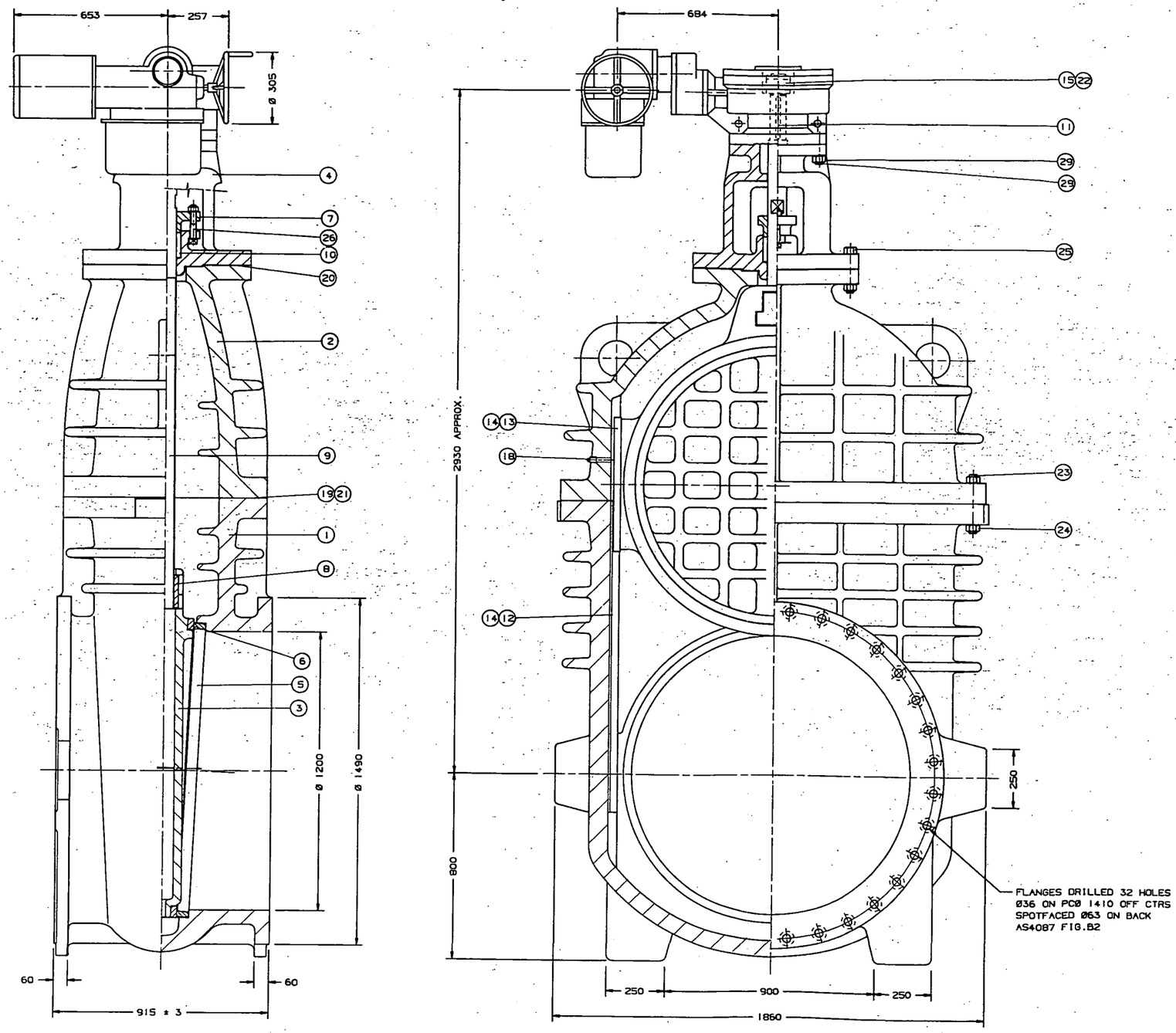

CLIENT	ORDER No.	QTY	REMARKS
BRIBANE CITY COUNCIL	CONTRACT No. R111/96/97	1	FLANGES DRILLED AS4087 FIG.B2 MAX. WORKING PRESSURE-1200 KPa TEST PRESSURES: BODY -2400 KPa SEAT -1200 KPa COATING: INT & EXT JOTACOTE 412 MIN. DFT -500 MICRON

AL416

ITEM	QTY	DESCRIPTION	MATERIAL	SPECIFICATION	DETAIL
30.	8	WASHER ,SPRING -Ø33	C.S.		
29.	8	NUT 1-1/4"UNC	C.S.		
28.	8	STUD 1-1/4"UNC X 130 LG.	C.S.		
27.	1	ACTUATOR -LIMITORQUE L120-85-60/6,HERCUS BVT9SRA15 (16:1)			37089A
26.	2	BOLT SQ.HD.-M24 X 140 LG.	S.S.	AS2837 Gr 316	
25.	12	BOLT ,HX.HD.-M33 X 170 LG.	C.S.	GALVANISED	
24.	64	NUT -M33	C.S.	GALVANISED	
23.	32	STUD -M33 X 250 LG.	C.S.	GALVANISED	
22.	2	SCREW-GRUB -M8 X 12 LG.	A.S.		
21.	1	O-RING -0.139" SECT.	NITRILE		
20.	1	GASKET-S'BOX -1.5 TK.	TESNIT BA		
19.	1	GASKET-BODY/BONNET -1.5 TK.	TESNIT BA		Y443
18.	1	PLUG -1/2"BSPT	G.W.I.		
17.	2	PLUG -2"BSPT	G.W.I.		
16.	1	PLATE,IDENTIFICATION	BRASS		97066A
15.	1	NUT ,THRUST	C.S.	AS1443 CS1020	98154A
14.	28	SCREW,PATCH	A.B.	AS1567 627	4759
13.	2	LINER, WEDGE	G.M.	AS1565 C83600	L/X729
12.	2	LINER, BODY	G.M.	AS1565 C83600	J/X729
11.	1	KEY -20 X 12 X 180 LG.	KEY STEEL		
10.		PACKING (SUPPLIED BY OTHERS)			
9.	1	STEM -AC	S.S.	AS2837 Gr.431	59631A
8.	1	NUT,WEDGE -AC	G.M.	AS1565 C83600	G/X729
7.	1	GLAND	G.M.	AS1565 C83600	H/X729
6.	2	RING,WEDGE	G.M.	AS1565 C83600	H/N320
5.	2	RING,BODY	G.M.	AS1565 C83600	J/M221
4.	1	PIECE, MATCHING	SGCI	AS1831 Gr400-12	70681A
3.	1	WEDGE	SGCI	AS1831 Gr400-12	56123A
2.	1	BONNET	SGCI	AS1831 Gr400-12	06271A
1.	1	BODY	SGCI	AS1831 Gr400-12	03974A

1200MM FIG. 694A SLUICE VALVE WITH LIMITORQUE L120-85 ELECTRIC ACTUATOR

© COPYRIGHT
This drawing is the subject of copyright and is not to be used or reproduced without prior consent of JOHNVALVES

LOGAN CITY TRUNK MAIN AMPLIFICATION SCHEME
CONTRACT No: R.111/96/97

DRAWN	CHECKED	MAT'L. APPR'D	MASS	SCALE
PF 2-10-97	MM 10-97		9600 KG APPROX.	

JOHNVALVES The Valve People
Creswick Road
Ballarat 3350
Victoria
Australia
ACN C05 051 674

DRG. No. AL416
SHEET SIZE A1

JOHN VALVES PTY. LTD
The Valve People

HEAD OFFICE & MANUFACTURING
Creswick Road, Ballarat, Victoria 3350, Australia
P.O. Box 279, Ballarat, Victoria 3350, Australia
Telephone: (03) 5333 0777 Facsimile: (03) 5338 1771
ACN 005 061 674

TEST CERTIFICATE

CERTIFICATE No. 6241

To: BRISBANE CITY COUNCIL

Dear Sir,

This is to certify that these valves have been subjected to and have passed the following tests.

VALVE DETAILS

Date: 13/2/98
Batch: 920756
Customers Order No: R111/96/97
Valve No./Ident. No.:
Type of valve: Sluice valve
Quantity: 1
Size: 450mm
Figure No.: 694
Drawing No.: AL421

DETAILS OF TESTS

Part Name / Description	Hydrostatic	Air	Duration of Tests	
BODY	2800 KPa	-	3 minutes	
SEATING	1400 KPa	-	3 minutes	

Remarks: Test medium: Water at ambient temperature.
Strength tests and functional tests performed in accordance with contract R111/96/97.
All tests found to comply with specified requirements.

Yours Faithfully
JOHN VALVES Pty. Ltd.

P. MAWBY

KIMMINS QUALITY SERVICES BOB KIMMINS - KI -

JOHN VALVES PTY. LTD
The Valve People

HEAD OFFICE & MANUFACTURING
Creswick Road, Ballarat, Victoria 3350, Australia
P.O. Box 279, Ballarat, Victoria 3350, Australia
Telephone: (03) 5333 0777 Facsimile: (03) 5338 1771
ACN 005 061 674

TEST CERTIFICATE

CERTIFICATE No. 6240

VALVE DETAILS

To: BRISBANE CITY COUNCIL

Date: 13/2/98
Batch: 920756
Customers Order No: R111/96/97
Valve No./Ident. No.:

Dear Sir,

This is to certify that these valves have been subjected to and have passed the following tests.

Type of valve: Sluice valve
Quantity: 1
Size: 600mm
Figure No.: 694
Drawing No.: AL420

DETAILS OF TESTS

Part Name / Description	Hydrostatic	Air	Duration of Tests	
BODY	2800 KPa	-	3 minutes	
SEATING	1400 KPa	-	3 minutes	

Remarks: Test medium: Water at ambient temperature.
Strength tests and functional tests performed in accordance with contract R111/96/97.
All tests found to comply with specified requirements.

Yours Faithfully
JOHN VALVES Pty. Ltd.

KIMMINS QUALITY SERVICES BOB KIMMINS - KI -

Peter Mawby

P. MAWBY

JOHN VALVES PTY. LTD
The Valve People

HEAD OFFICE & MANUFACTURING
Creswick Road, Ballarat, Victoria 3350, Australia
P.O. Box 279, Ballarat, Victoria 3350, Australia
Telephone: (03) 5333 0777 Facsimile: (03) 5338 1771
ACN 005 061 674

TEST CERTIFICATE

CERTIFICATE No. 6239

VALVE DETAILS

To: BRISBANE CITY COUNCIL

Date: 13/2/98
Batch: 920756
Customers Order No: R111/96/97
Valve No./Ident. No.:

Dear Sir,

This is to certify that these valves have been subjected to and have passed the following tests.

Type of valve: Sluice valve
Quantity: 1
Size: 750mm
Figure No.: 694
Drawing No.: AL419

DETAILS OF TESTS

Part Name / Description	Hydrostatic	Air	Duration of Tests	
BODY	2400 KPa	-	3 minutes	
WEDGE STRENGTH	2400 KPa	-	3 minutes	
SEATING	1200 KPa	-	3 minutes	

Remarks: Test medium: Water at ambient temperature.
Strength tests and functional tests performed in accordance with contract R111/96/97.
All tests found to comply with specified requirements.

Yours Faithfully
JOHN VALVES Pty. Ltd.

KIMMINS QUALITY SERVICES BOB KIMMINS - KI -

Peter Mawby

P. MAWBY

JOHN VALVES PTY. LTD
The Valve People

HEAD OFFICE & MANUFACTURING
Creswick Road, Ballarat, Victoria 3350, Australia
P.O. Box 279, Ballarat, Victoria 3350, Australia
Telephone: (03) 5333 0777 Facsimile: (03) 5338 1771
ACN 005 061 674

TEST CERTIFICATE

CERTIFICATE No. 6238

To: BRISBANE CITY COUNCIL

Dear Sir,

This is to certify that these valves have been subjected to and have passed the following tests.

VALVE DETAILS

Date: 13/2/98
Batch: 920756
Customers Order No: R111/96/97
Valve No./Ident. No.: Body No. 7363
7364
7365
Type of valve: Sluice valves
Quantity: 3
Size: 900mm
Figure No.: 694
Drawing No.: AL417, AL418

DETAILS OF TESTS

Part Name / Description	Hydrostatic	Air	Duration of Tests	
BODY	2400 KPa	-	3 minutes	
SEATING	1200 KPa	-	3 minutes	

Remarks: Test medium: Water at ambient temperature.
Strength tests and functional tests performed in accordance with contract R111/96/97.
All tests found to comply with specified requirements.

Yours Faithfully
JOHN VALVES Pty. Ltd.

KIMMINS QUALITY SERVICES BOB KIMMINS - KI -

Peter Mawby

P. MAWBY

JOHN VALVES PTY. LTD
The Valve People

HEAD OFFICE & MANUFACTURING
Creswick Road, Ballarat, Victoria 3350, Australia
P.O. Box 279, Ballarat, Victoria 3350, Australia
Telephone: (03) 5333 0777 Facsimile: (03) 5338 1771
ACN 005 061 674

TEST CERTIFICATE

CERTIFICATE No. 6269

VALVE DETAILS

To: BRISBANE CITY COUNCIL

Date: 5/3/98
Batch: 920756
Customers Order No: R111/96/97
Valve No./Ident. No.: Body No. 7414

Dear Sir,

This is to certify that these valves have been subjected to and have passed the following tests.

Type of valve: Sluice valve
Quantity: 1
Size: 1200mm
Figure No.: 694A
Drawing No.: AL416

DETAILS OF TESTS

Part Name / Description	Hydrostatic	Air	Duration of Tests	
BODY	2400 KPa	-	3 minutes	
WEDGE STRENGTH	2400 KPa	-	3 minutes	
SEATING	1200 KPa	-	3 minutes	

Remarks: TEST MEDIUM: Water at ambient temperature.
Strength tests and functional tests performed in accordance with contract No. R111/96/97
All Tests found to comply with specified requirements.

KIMMINS QUALITY SERVICES BOB KIMMINS - KI -

Yours Faithfully
JOHN VALVES Pty. Ltd.

P. MAWBY

Section 9

TROUBLE SHOOTING.

Problem	Cause	Solution
Valve leaks from stem seal	Damaged o'rings Stem scoring	Replace completely with new set. Remove with emery or remove stem and remachine.
Valve leaks from body / bonnet gasket joint.	Loose bolts, damaged gasket	Check gasket and tighten bolts
Valve leaks from housing / bonnet gasket joint.	Loose bolts and / or damaged gasket.	Check o'ring, replace if necessary.
Valve will not open or close	Gearbox damage. Thrust Nut and locknut loose Valve stem jammed. Obstruction across valve seats	Dismantle Gearbox. Retighten Nut and Locknut. Disconnect Operator from stem check operation . Check for bent stem. Inspect valve seats.
Valve stem operates, valve closed,	Stem has disengaged for wedge nut	Check stem / wedge nut assembly.
Valve leaking.	Wedge not fully seated. Damaged seat faces.	Obstruction in pipeline Check seat faces and rectify

Section 10

SPARE PARTS INFORMATION

When ordering spare parts quote all the information stamped on the nameplate including the valve size and relevant John Valves assembly drawing number, item number, component description and quantity required.

All spare parts are available through John Valves head office.

Qld Office 172 Evans Road
Salisbury QLD 4107

Ph 07 3277 8700
Fax 07 3274 0007

Head Office - Creswick Road
BALLARAT. 3350.

Ph: 03 5333 0777
Fax: 03 5338 1771